City of Mentor

BID SET

2016 Road Repair Program
City of Mentor
January 2016

STATE OF OHIO
ALLEN E.
PENNINGTON
E-63942
REGISTERED
PROFESSIONAL ENGINEER

Prepared under the supervision of
Allen E. Pennington, Ohio P.E. 63942
Date 12/22/15
Civil Engineer – Traffic,
Office of the Mentor City Engineer

Approved By:
David A. Swiger, P.E.
City Engineer
Date 12/22/15

CITY OF MENTOR OFFICIALS

ADMINISTRATION

Kenneth J. Filipiak, City Manager

David W. Malinowski, Finance Director

Richard A. Hennig, Law Director

David A. Swiger, City Engineer

Matthew Schweikert, Director of Public Works

Kenneth Kaminski, Director of Parks, Recreation and Public Facilities

Ronald Traub, Economic and Community Development Director

Kevin Knight, Chief of Police

Robert Searles, Fire Chief

COUNCIL

Janet A. Dowling, President

John A. Krueger, Vice President

Sean P. Blake

Matthew E. Donovan

Ray Kirchner

Bruce R. Landeg

Scott J. Marn

Elizabeth A. Limestahl, Clerk

ADVERTISEMENT FOR BIDS/PUBLIC NOTICE TO BIDDERS

Sealed proposals will be received at the Purchasing Department, City of Mentor, 8500 Civic Center Boulevard, Mentor, Ohio until 12 noon on _January 22, 2016__ and will be opened and read immediately thereafter for the following roadway resurfacing project:

2016 ROAD REPAIR PROGRAM
OPINION OF PROBABLE CONSTRUCTION COST:
CONTRACT A - $1,025,000.00
ALTERNATE 1 - $47,500.00
COMPLETION DATE: _8/26/2016___

CONTRACT B - $285,000.00
ALTERNATE 1 - $52,500.00
COMPLETION DATE: _8/26/2016

Bids must be in accordance with specifications advertised on the City of Mentor website: www.cityofmentor.com/category/rfp or RFP's will be available for pick-up at the Purchasing Office.

BY ORDER OF

_*Kenneth J. Filipiak*__, City Manager

Publish: *News-Herald*

TABLE OF CONTENTS

	Page No.
Title Page	i
Officials Page	ii
Advertisement for Bids/Public Notice to Bidders	iii
Table of Contents	iv - vii

SECTION 1 BID DOCUMENTS AND BID FORMS

Instructions to Bidders	BD.1 - BD.7
Prices to Include	BD.8 - BD.12

ALL BID FORMS SHALL BE COMPLETED AND SUBMITTED WITH BID

Form of Non-collusion Affidavit	BF.1
Corporate Resolution	BF.2
Supplemental Bond Acknowledgement	BF.3
Insurance Agent Affidavit	BF.4
Proposed Subcontractors	BF.5
Experience Record	BF.6
Bid Security	BF.7
Bidder Qualifications	BF.8 – BF.9
Proposal Forms	BF.10 - BF.14
Signature Page (BF.12, BF 14) **SEE BELOW**	

ALL BIDS SUBMITTED MUST INCLUDE THE REQUIRED BID DOCUMENTS AND A PROPERLY EXECUTED SIGNATURE PAGE (BF.12 AND/OR BF.14)

SIGNATURE PAGE AVAILABLE *ONLY* BY CONTACTING VERONICA FETSKO, FETSKO@CITYOFMENTOR.COM OR 440-974-5776

SECTION 2 CONTRACT FORMS

Notice of Award	CF.1
Contract, Certificate of Fiscal Officer and Certificate of Legal Counsel	CF.2 - CF.3
Contract Bond, Certificate of Insurance, Certificate of Worker's Comp.	CF.4
Delinquent Personal Property Statement	CF.5
Notice to Proceed	CF.6
Notifications, Certifications, Affidavits	N.1 – N.2
Unresolved Findings of Recovery	
Affidavit of Compliance with ORC Section 3517.13 (Political Contribution Limitations)	

SECTION 3 GENERAL CONDITIONS, EJCDC No. C-700 (2007) 1-62

SECTION 4 SUPPLEMENTARY CONDITIONS SC.1 - SC.9

SECTION 5 SPECIFICATIONS

DIVISION 1 - GENERAL REQUIREMENTS

01010	SUMMARY OF WORK
01020	GENERAL REGULATIONS AND PERMITS
01021	INDUSTRY STANDARDS
01032	PROJECT MEETINGS
01033	SURVEYS, LAYOUTS AND LEVELS
01034	CONTRACTOR'S USE OF SITE
01035	PROGRESS SCHEDULE
01038	SAMPLING AND TESTING
01041	PRE-CONSTRUCTION VIDEO DOCUMENTATION
01042	QUALIFICATION OF TRADESMEN
01060	SUBMITTALS
01088	TEMPORARY TRAFFIC CONTROL DEVICES
01091	ENVIRONMENTAL PROTECTION
01099	FINAL COMPLIANCE AND SUBMITTALS
02520	ASPHALT CONCRETE PAVING AND MATERIALS

		Page No.
SECTION 6	STANDARD SPECIFICATIONS	
	ODOT Specifications	SS.1
SECTION 7	SPECIFIC PROJECT REQUIREMENTS	SR.1 – SR.2
SECTION 8	WAGE RATES	1-56
SECTION 9	TYPICAL SECTIONS AND DETAILS	
	Details	A-1 – A-7
	Map (Color Coded Map of Street Work)	M-1
	Typical Section	T-1

SECTION 1
BID DOCUMENTS AND BID FORMS

INSTRUCTIONS TO BIDDERS

PART 1 GENERAL

1.1 Sealed bids shall be received by the Owner at the location specified and until the time and date specified in the Advertisement for Bids/Public Notice to Bidders.

1.2 Each bid shall contain the full name and address of each person or company interested in said bid. If no other person be so interested, the Bidder shall distinctly so state the fact.

1.3 Bid forms must be completed in ink or by typewriter. Any corrections to the bid forms prior to submission must be initialed by the person signing the bid. Failure to submit any bid form(s) or other required document(s) may be cause for rejection of the bidder's bid at the sole discretion of the Owner.

1.4 Bids by Corporations must be executed in the corporate name by the President, Vice President, or other officer accompanied by evidence of authority to sign and the corporate seal must be affixed and attested by the Secretary on the Corporate Resolution form.

1.5 Bids by partnerships must be executed in the partnership name and signed by a partner, whose title must appear under the signature.

1.6 All names must be typed or printed below the signature.

1.7 The bid shall contain an acknowledgment of receipt of all Addenda.

1.8 If a Bidder wishes to withdraw his bid prior to the opening of bids, he shall state his purpose in writing to the Owner before the time fixed for the opening, and when reached it shall be handed to him unread.

1.9 After the opening of bids, no Bidder may withdraw his bid for a period of 60 days.

PART 2 EXAMINATION OF CONTRACT DOCUMENTS AND SITE

2.1 Before submitting a bid, each Bidder must

A. Examine the Contract Documents thoroughly.

B. Visit the site to familiarize himself with local conditions that may in any manner affect cost, progress, or performance of the work.

C. Familiarize himself with Federal, State, and local laws, ordinances, rules, and regulations that may in any manner affect cost, progress, or performance of the work.

D. Study and carefully correlate Bidder's observations with the Contract Documents.

2.2 Reference is made to the Specific Project Requirements for the identification of any reports of investigations and tests of subsurface and latent physical conditions at the site or otherwise affecting cost, progress or performance of the work which have been relied upon by the Engineer in preparing the drawings and specifications. Owner will make copies of such reports available to any Bidder requesting them if not made available with the bid documents. These reports are not guaranteed as to accuracy or completeness; nor are they part of the Contract Documents. Before submitting his bid each Bidder will, at his own expense, make such additional investigations and tests as the Bidder may deem necessary to determine his bid for performance of the work in accordance with the time, price and other terms and conditions of the Contract Documents.

2.3 Upon request, the Owner will provide each Bidder access to the site to conduct such reasonable investigations and tests as each Bidder deems necessary for submission for his bid.

2.4 The lands upon which the work is to be performed, rights-of-way for access thereto, and other lands designated for use by Bidder in performing the work are identified on the Drawings.

2.5 The submission of a bid will constitute an incontrovertible representation by the Bidder that he has complied with every requirement of this section and that the Contract Documents are sufficient in scope and detail to indicate and convey understanding of all terms and conditions for performance of the work.

PART 3 ESTIMATED QUANTITIES

3.1 In Unit Price Contracts, the quantities of the work itemized in the bid are approximate only and the bidders are hereby notified that the estimated quantities made by the Engineer are merely for the guidance of the Owner in comparing on a uniform basis all bids received for the work.

3.2 The contract quantities, where itemized, are based on plan horizontal and vertical dimensions unless otherwise specified. It is the Contractor's responsibility to verify and determine actual quantities of materials such as pipe, pavement, subgrade, etc. in his ordering materials.

3.3 Payments, except for lump sum contracts and except for lump sum items in unit price contracts, will be made to the Contractor only for the actual quantities of work performed or materials furnished in accordance with the plans and specifications. It is understood that the scheduled quantities of work to be done and materials to be furnished for items labeled as "Contingency" may be increased or diminished by any amount and the awarded quantity of all other items may be increased or diminished up to 15% without in any way invalidating the bid unit prices.

3.4 The successful Bidder will be required to furnish the Owner with a complete breakdown of the lump sum bid items, to the satisfaction of the Engineer/Architect, before signing the Contract documents.

PART 4 CONTRACTOR'S QUALIFICATION

4.1 Bidder shall provide information relating to similar projects completed within the past 5 years and shall include a list of projects currently under construction including status and contact person. Bidders experience shall demonstrate capabilities to undertake this type of project.

4.2 Bidder shall own, have rental or lease agreements for, or otherwise have readily available any and all equipment and tools necessary for proper execution of the work. The Owner reserves the right to request lists of equipment or tools available for the project including sources.

4.3 Bidder shall provide pertinent information to the Owner relative to any pending suits or outstanding liens. If no information is provided by the Bidder, the Owner shall assume that any such suits or liens do not exist.

4.4 The Owner may require similar information on any or all subcontractors proposed by the Bidder.

PART 5 SUBCONTRACTORS

5.1 The Bidder shall state on the appropriate bid form the names of all Subcontractors proposed and the items of work they are to be assigned. All work not assigned to a Subcontractor shall be assumed by the Owner to be performed by the Bidder.

5.2 The successful Bidder shall not subcontract work totaling more than 50% of the total contract.

5.3 The Owner reserves the right to approve all subcontractors proposed by the Bidder. If the Owner, after due investigation, rejects the use of a proposed subcontractor, the apparent successful Bidder may either submit an acceptable substitution without increase in bid price or decline substitution and withdraw his bid without sacrificing his bid security. Any listed subcontractor to whom the Owner does not make written objection prior to award of contract, shall be deemed acceptable to the Owner.

5.4 Requests for changes of Subcontractor by the Bidder after the award shall be subject to the Owner's approval and shall not change the contract bid prices.

5.5 No contractor shall be required to employ any Subcontractor, person or organization against whom he has reasonable objection.

PART 6 BID REVIEW BY OWNER

6.1 The Owner reserves the right to reject any and all bids, to waive as an informality any and all irregularities, and to disregard all nonconforming, nonresponsive or conditional bids.

6.2 All extensions and totals of unit prices and quantities submitted as part of the bid shall be considered informal until verified by the Owner. All bids must be made on the forms contained herein and the bid prices must be written therein, in figures only. Unit prices shall be separately written for "Unit Price Labor," "Unit Price Material," and "Total Unit Price" for each item listed. Should an error in addition and/or multiplication be determined while checking the Contractor's math and verifying his total bid, the "Unit Price Labor" and the "Unit Price Material" figures shall govern in determining the correct "Total Unit Price" and the correct "Item Total." Each bidder must bid on all Items, Alternates, Deductions, and Additions contained in the Bidding Forms. All bids not in conformity with this notice may be considered informal and may be rejected.

6.3 In evaluating bids, the Owner may consider:

A. The qualifications and experience of the Bidder, proposed subcontractors, and principal material suppliers as outlined in the plans and specifications.

B. Financial ability and soundness of the Bidder and proposed subcontractors.

C. Completeness of all bid forms and bid requirements.

D. Alternates and unit prices requested in the Bid Forms.

E. Unit prices or schedules of values that are or appear to be unbalanced.

F. Previous contractual experience with the Owner.

G. Whether or not the bid package complies with the prescribed requirements.

H. Any other matter allowed by law or local ordinance or resolution.

6.4 Owner may conduct further investigations as he deems necessary to assist in the evaluation of any bid and to establish the responsibility, qualifications, and financial ability of the Bidders, proposed Subcontractors, and other persons and organizations to do the work in accordance with the Contract Documents to Owner's satisfaction within the prescribed time.

6.5 Owner reserves the right to reject the bid of any Bidder who does not pass any such evaluation to Owner's satisfaction.

6.6 The Contract award shall be based on the lowest and best bid or lowest responsive and responsible bid (as applicable for the public contracting agency receiving bids) for the base bid and selected alternate items (if any) for this project.

PART 7 BID SECURITY

7.1 Each bid must be accompanied by a certified or cashier's check in the amount of 10% of the amount bid, an irrevocable letter of credit in the amount of 10% of the amount bid or an original bond in the amount of 100% of the amount bid per ORC 153.54 and

153.571. The certified or cashier's check, or irrevocable letter of credit shall be from a financial institution authorized to transact business in the State of Ohio and acceptable to the Owner. The bond shall be underwritten by a Surety Company authorized to transact business in the State of Ohio having an Ohio agent and listed on the most current Department of the Treasury Circular 570, "Surety Companies Acceptable on Federal Bonds." The bond shall be a "Bid Guarantee and Contract Bond" ("rollover bond") per O.R.C. sections 153.54 and 153.571 submitted for the full amount of the bid including all alternates, if any.

If bid security is made by bond, the Bidder and his Surety shall sign the Supplemental Bond Acknowledgement form and submit with his bid.

7.2 The certified or cashier's check, irrevocable letter of credit, or bond shall be made payable to the Owner and shall serve as a guarantee that in the event the bid is accepted and a contract is awarded to the successful Bidder, the contract will be executed by the bidder including any certifications, certificates or additional bonds required by the contract.

7.3 Failure on the part of the successful Bidder to execute the contract documents will cause the certified or cashier's check, irrevocable letter of credit, or bond to be forfeited to the Owner as damages.

A. If the Owner awards the contract without rebidding, the Bidder (and the Surety on his bond if a bond was submitted) shall be liable to the Owner for a penal sum not to exceed the difference between the low bid and the next lowest bidder or 10% of the amount of the bid, whichever is less.

B. If the Owner does not award the Contract to the next lowest Bidder, but resubmits the project for bidding; the Bidder (and the Surety on his bond if a bond was submitted) shall be liable to the Owner for a penal sum not to exceed the costs in connection with the resubmission of bids or 10% of the amount of the bid, whichever is less.

7.4 Checks or letters of credit for bid security of all bidders will be returned in the manner and timeframe stipulated in the Ohio Revised Code.

PART 8 CONTRACT BOND

8.1 As security for faithful performance and payment of all obligations under the Contract, the Owner shall require and the successful Bidder shall furnish either:

A. "Bid Guarantee and Contract Bond" (AKA "rollover bond") per O.R.C. sections 153.54 and 153.571.

B. Contract Bond per Ohio Revised Code Sections 153.54 and 153.57, in the amount of 100% of the Contract Price. The Contractor and his Surety shall sign the Supplemental Bond Acknowledgement form and submit with the Contract forms.

8.2 The bond shall be underwritten by a Surety Company authorized to transact business in the State of Ohio having an Ohio agent and listed on the most current Department of the Treasury Circular 570, "Surety Companies Acceptable on Federal Bonds."

8.3 The contract bond shall cover correction of the work for the period stated in the specifications and the correction period shall start upon Final Acceptance of the entire project and final payment by the Owner.

8.4 Nothing in the performance of the Engineer's service to the Owner in connection with this project shall in any way imply any undertaking for the benefit of the successful Bidder, its subcontractor(s), or the surety of any of them.

PART 9 AWARD AND EXECUTION OF CONTRACT

9.1 After the Owner's legislative body awards the project, the successful bidder will receive the unsigned contract documents. Within 10 days after their receipt, the successful Bidder shall sign and deliver to the Owner said contract documents including any certifications, certificates, or additional bonds required by the contract.

9.2 The Owner shall execute the Contract within 60 days after the day of the bid opening. When necessary and by mutual consent between the Owner and the Successful Bidder, this 60-day period may be extended.

9.3 The date of the Owner's signature on the Contract Agreement shall be the effective contract date.

9.4 The Owner shall execute and deliver to the successful Bidder one set of fully executed contract documents.

PART 10 INSURANCE

10.1 Verification of limits for public liability, property damage, automobile, Worker's Compensation, or any other insurance required by the provisions of this Contract must be submitted to the Owner prior to execution of the Contract.

10.2 All insurance shall be endorsed so that it cannot be cancelled for non-payment of premium for 10 days or cancelled or non-renewed for any other reason in less than 30 days after a written notice of such proposed action by the insurer is given to the Owner. The cancellation clause on the Certificate(s) of Insurance shall read as specified in the Supplementary Conditions and failure to submit an insurance certificate and/or policy endorsement verifying same shall be reason for the Owner to consider the Contractor non-responsive in complying with the requirements for contract execution and may be cause for forfeiture of the Bid Security to Owner.

10.3 The Contractor’s Liability Insurance policy(s) shall be endorsed such that limits are on a Per Project basis.

10.4 The Contractor shall also provide an Owner's and Contractor's Protective Policy.

PART 11 NON-COLLUSION AFFIDAVIT

11.1 Each bid must be accompanied by a completed Noncollusion Affidavit provided within the contract documents.

11.2 Where there is reason to believe collusion or combination among bidders exists, the Owner reserves the right to reject the bid of those concerned.

PART 12 DELINQUENT PERSONAL PROPERTY STATEMENT

12.1 Included with the contract documents is a Delinquent Personal Property Statement to be filled out by the successful Bidder.

12.2 The statement shall be sent to both the County Auditor and the County Treasurer. A signed copy shall remain in the contract documents as well.

PART 13 ORIGINAL DOCUMENTS

13.1 All bid forms, contract forms, bonds and any other bid documents or contract documents requiring signatures shall be submitted with original signatures. No photo copies or faxed copies of signed documents shall be accepted.

PRICES TO INCLUDE

PART 1 GENERAL

Any work shown on the plans or required in the specifications but not paid for separately as a bid item shall be included in the cost of other bid items. The amount bid for each bid item shall include the following:

1.1 All labor, materials, tools, equipment and transportation necessary for the proper execution of the work in accordance with the contract documents.

1.2 All assistance required by the Engineer to verify compliance with the contract documents, including measuring for final pay quantities.

1.3 Project coordination and scheduling.

1.4 All provisions necessary to protect workers, the general public and property along the work in accordance with the contract documents.

1.5 Reimbursement to Owner for costs for re-inspection or retesting of any work not installed in compliance with the contract documents.

1.6 Maintaining traffic.

1.7 Mobilization.

1.8 Bonds and Insurances (including "per project aggregate" limit endorsement, "Owner/Contractor Protective Policy," "All Risk Builder's Risk Insurance," and/or "Installation Floater Insurance," as required; **and any endorsements to fully comply with all contract requirements**).

1.9 Construction staking of the improvements.

1.10 All erosion control measures as needed.

1.11 Restoration, seeding and mulching.

PART 2 ITEMS

All work proposed by this contract shall be quantified and paid for in accordance with the pertinent ODOT specification except as specifically altered by other provisions of this contract.

2.1 PAVEMENT PLANING, (BITUMINOUS OR PORTLAND CEMENT CONCRETE), AS PER PLAN

Basis of Payment

Payment shall be made in accordance with ODOT Item 254 and the attached construction drawings and shall also include all General Items 1.1 to 1.11 above. Planing depths shall be as specified by the engineer for each street. See quantity worksheets in section 01010 for specific bituminous planning depths.

2.2 TACK COAT, TRACKLESS

Basis of Payment

The unit price stipulated per gallon of tack coat shall be for the trackless tack coat as required for each of the separate application rates as defined in the typical sections.

2.3 ITEM 253 PAVEMENT REPAIR, AS PER PLAN

This item shall be performed per Item 253 with the following modifications:

A quantity of this item shall be provided for use as directed by the engineer. This item shall consist of cutting and removing 7" of deteriorated pavement and subbase material. Failure to remove the specified 7" will require the contractor to return and remove materials to the appropriate depth. Contractor shall place 7" of 301 asphalt concrete base, PG64-22. The maximum compacted depth of any one layer shall be 4". It is not the intent to repair every deteriorated area within the project. After milling, the contractor shall examine and pre-mark all areas requiring full depth repair. Upon completion of marking, the contractor shall contact the engineer for review of the proposed areas. Within two working days of notification, the engineer will review areas and add or delete areas at his discretion. No paving/full depth repair work shall occur until the contractor has been notified to proceed by the engineer. Failure of the contractor to follow this procedure may result in the City withholding payment for any work performed.

Basis of Payment

The unit price stipulated shall be based upon the actual number of square yards of pavement removed and replaced to the limits designated by the engineer. Payment is full compensation for all labor, equipment, incidentals and materials, cutting, removal and disposal of existing pavement and base necessary to complete this work. Any excavation in excess of the specified depth shall be restored at the contractor's expense.

2.4 ITEM 251, 3 INCH PARTIAL DEPTH PAVEMENT REPAIR, AS PER PLAN

Method of Measurement

This method of measurement shall be per ODOT 251 as applicable with the exception that partial depth grinding of concrete joints on the project shall be to a depth of 3" and a width of 9" to each side of the joint (18" total).

2.5 ITEM 604, MONUMENT BOX ADJUSTED TO GRADE, AS PER PLAN

Basis of Payment

The unit price bid shall include identifying monument pin location and coring of asphalt and concrete to reestablish pin location to finished grade. Core shall be fitted with a casting similar in composition to existing pin's casting.

2.6 ITEM 604, MANHOLE?INLET BASIN ADJUSTED TO GRADE, AS PER PLAN

Basis of Payment

The unit price bid shall include reconstruction of manhole/inlet basin to solid structure and adjustment to finished grade of the pavement. Payment is full compensation for all labor, equipment, incidentals and materials, cutting, removal and disposal of existing materials necessary to complete this work.

2.7 HYBRID INTERLAYER PAVING MAT, GLASPAVE 25, AS PER PLAN

1.0 Special Provisions (Type1)

The work shall consist of furnishing and installing a Hybrid interlayer paving mat constructed from fiberglass and polyester. The Hybrid interlayer paving mat shall be GlasPave 25 or pre-approved equal

2.0 Material Requirements

2.1 Hybrid Paving Mat

The Hybrid paving mat shall be constructed of a fiberglass mesh embedded in a polyester mat. The material shall be resistant to chemicals, mildew and rot. Also the mat will not have any tears or holes that will adversely affect the in-field performance or physical properties of the installed material. The Hybrid paving mat will meet the following physical requirements:

Physical Properties of the Hybrid Paving Mat

Property	Test Method	Units	Typical Value
Mass per Unit	ASTM D5261	g/sm (oz/sy)	136(4.0)
Tensile MD	ASTM D5035	N/50mm (lbs/2in)	>1250(281)
Tensile CD	ASTM D5035	N/50mm (lbs/2in)	>1250(281)
Elongation	ASTM D5035	Percent	<5%
Melting Point	ASTM D276	C (F)	>205(400)

The manufacturer of the hybrid paving mat will furnish a certificate of compliance that all physical properties of the material shipped to the project meet the specification requirements.

3.0 Hybrid Paving Mat Installation

Prior to the project the manufacturer will ensure that the installer is trained on the best method(s) to install the Hybrid Paving Mat. The manufacturer will also ensure that a representative is on sight at the beginning of the project to supervise the initial installation.

3.1 Surface Preparation

All surfaces which are to have the Hybrid Paving Mat shall be thoroughly cleaned, dry and free of all dirt and other contaminants. All cracks greater than ¼ inch (6mm) may be filled as directed by the engineer. As required by the engineer all irregular surfaces will receive a leveling course using a typical asphalt paver.

3.2 Mat Installation

Hybrid Paving Mat can be installed mechanically or by hand. Typical mechanical installation shall be by a fabric tractor or a bitumen distributor (spreader) with a fabric applicator on the back. The mechanical applicator should be able to handle up to 2.0m (78inch) wide rolls. In areas where the product needs to be installed by hand the mat shall be broomed to ensure good contact with the applied tack coat removing any ensuing bubbles. Wrinkles are inherent in high tensile strength paving mats and are not cause for alarm by the project engineer or paving personnel. Wrinkles will not affect the mat performance or harm the asphalt surface. If wrinkles or folds of 1” or more occur during installation, they shall be repaired by simply slitting the wrinkle and laying the mat back down in the paving direction.

The Hybrid Paving Mat shall be overlapped a minimum of 3inches (75mm) in the transverse and 2 inches (50mm) in the longitudinal direction.

3.3 Tack Coat Application

A hot asphalt tack coat shall be applied prior to placing the Hybrid Paving Mat. The grade of Asphalt Cement should be a PG Specification. In normal conditions an AC 20 or PG 64-22 is recommended.

The Hybrid Paving Mat optimum tack coat application rate is 0.15gal/sqyd (0.70liter/sqm). The condition of existing surface may require an adjustment to this rate which will be at the discretion of the manufacturer’s representative. In no case shall cutbacks or solvents be used in the tack coat. The placing of the tack coat shall be by a motorized distributor (spreader) capable of adjusting application rates by 1/100th of a gallon. The distributor must be capable of applying a proper fan of tack coat from each valve on the distributor bar, the full width of the mat and over any overlapping joints. The distributor shall apply a uniform application of tack coat at the required application rate prior to installation of the Hybrid Paving Mat.

In the event that the distributor cannot be used, then a tack coat can be applied with a squeegee or hand wand spray however this must be minimized. At all times traffic shall not drive on the tack coat. It is best practice to place the asphaltic concrete mix on to the Hybrid Paving Mat the same day the mat is applied. Regular vehicular traffic shall be kept off the mat.

The asphalt hot mix paving crew and their delivery trucks must provide proper and reasonable protection for the interlayer product and exercise care in movement over the mat during the paving operations.

The finished compacted hot mix surface shall be a minimum of 1.5" in thickness.

4.0 Measure of Payment

The Hybrid paving mat shall be paid in accordance with the plans and specifications outline in the contract. The unit of measurement shall be paid for at the unit price per square yard (square meter) installed in place. The pay item does not include overlaps required in the installation of the Hybrid Paving Mat.

The pay item does include supply and installation of the Hybrid Paving Mat which
includes all labor, tools, materials (including tack coat) and other incidentals required in the full completion of the placement of the mat.

CONTRACT B – CONCRETE PAVEMENT REPAIR PROGRAM

3.1 FULL DEPTH PAVEMENT REMOVAL AND RIGID REPLACEMENT, CLASS QC MS, AS PER PLAN

Basis of Payment

Payment shall be made in accordance with ODOT Item 255 and shall also include all General Items 1.1 to 1.11 above and the cost for all full depth diamond blade saw cutting regardless of existing pavement thickness, removal of existing pavement regardless of existing pavement thickness, proof rolling, subgrade compaction and preparation, integral curb, 3" sub-base course of ODOT Item 304 (if subbase course does not already exist), reinforcing steel, steel dowels, joint sealers, temporary drives or provisions for access, and seeding and mulching of all disturbed areas. **(5/8" hook bolts on 18" centers may be used in lieu of steel dowels for transverse joints)** Width of Pavement Joint repair shall be as directed by the engineer. Note: Engineer will mark pavement replacement area before saw cutting and will include repair area quantity. If the contractor disagrees with quantity as marked, contractor shall contact the engineer prior to cutting the pavement. Otherwise the quantity indicated by the engineer shall be considered final measured quantity. ***Note: All concrete slurry must be immediately washed off the roadway at the time of concrete sawing. Contractor shall place dandy bags (or an approved equal) on each inlet adjacent to concrete sawing area to minimize infiltration of concrete slurry into storm system. Failure to follow this requirement will result in immediate suspension of project operations until such time as contractor complies with requirements.***

FORM OF NONCOLLUSION AFFIDAVIT

STATE OF)
) SS
COUNTY OF)

_____, being first duly sworn, deposes and says
(Individual Name)

that he/she is _____ of _____
(Sole Owner, Partner, President, Secretary, etc.) (Corporation Name)

the party making the proposal or bid; that such bid is genuine and not collusive or sham; that said Bidder has not colluded, conspired, connived, or agreed, directly or indirectly with any Bidder or person, to put in a sham bid, or that such other person shall refrain from bidding, and has not in any manner, directly or indirectly sought by agreement or collusion or communication or conference, with any person, to fix the bid price of affiant or any other Bidder, or to fix any overhead, profit, or cost element of said Bid price, or of that of any other Bidder, or to secure any advantage against the Owner, or any person interested in the proposed Contract; and that all statements contained in said proposal or bid are true; and further, that such Bidder has not, directly or indirectly submitted this Bid, or the contents thereof, or divulged information or data relative thereto to any association or to any member or agent thereof.

_____
Affiant

Subscribed and sworn to before me this _____ day of _____ , 20 _____.

_____
Notary Public

My Commission Expires: _____

CORPORATE RESOLUTION

I, _____,
(Individual Name)

Secretary of _____ an _____ Corporation
(Corporation Name) (State)

hereby certify that the Board of Directors of said Corporation on the _____day of

_____, 20_____, adopted a resolution authorizing the _____ of this
(Corporation Title, i.e., President, Vice President, etc.)

Company, namely, _____, to sign bid proposals, sign and
(Individual Name)

enter into any and all contracts and other instruments, sign and/or authorize bid guaranty and performance bonds for the purpose of furnishing labor and materials at such price and upon such terms and conditions, including any amendments or modifications thereto, as said

_____ in his sole discretion shall deem best, and that said actions
(Corporation Title, i.e., President, Vice President, etc.)

shall be binding upon the Corporation.

IN WITNESS WHEREOF, I have hereunto set my hand and affixed the seal of said

Corporation at _____, _____ this _____ day
(City) (State)

of _____ , 20___, and I further certify that said resolution is still in

full force and effect.

_____

Corporate Secretary

PROPOSED SUBCONTRACTORS

The Bidder is required to state in the spaces provided below, the Subcontractors he proposes to use to accomplish the work under this Contract. The items and specific amounts of work assigned to each listed Subcontractor shall also be outlined. Duplicate this sheet as needed.

1. Name: _____
   Address: _____
   City/State/Zip: _____
   Description: _____
   _____
   Phone: ( ) _____ Amount: $ _____ % of Contract: _____

2. Name: _____
   Address: _____
   City/State/Zip: _____
   Description: _____
   _____
   Phone: ( ) _____ Amount: $ _____ % of Contract: _____

3. Name: _____
   Address: _____
   City/State/Zip: _____
   Description: _____
   _____
   Phone: ( ) _____ Amount: $ _____ % of Contract: _____

4. Name: _____
   Address: _____
   City/State/Zip: _____
   Description: _____
   _____
   Phone: ( ) _____ Amount: $ _____ % of Contract: _____

5. Name: _____
   Address: _____
   City/State/Zip: _____
   Description: _____
   _____
   Phone: ( ) _____ Amount: $ _____ % of Contract: _____

EXPERIENCE RECORD

The Bidder is required to state the character of previous work, give references, and such other detailed information as will enable the Owner to determine capability, responsibility, experience, skill, and financial standing. Provide data for the last five (5) years. Duplicate this sheet as needed. **Information submitted in an alternate format MUST contain all the information requested on this page.**

Project Name: _____

Description/Scope of Bidder's Work: _____

On this project you were a ____ Prime Contractor **OR** ____ Sub Contractor to _____

Total Project Cost: $ _____ Your Contract or Subcontract Amount: $ _____

% Complete (if in progress) _____% or Date Completed (if complete): _____

Project Owner: _____

Owner Contact: _____ Phone: ( ) _____

Engineer/Arch. Firm: _____

Engineer/Arch. Contact: _____ Phone: ( ) _____

Your Bonding Company on this project (if any): _____

Project Name: _____

Description/Scope of Bidder's Work: _____

On this project you were a ____ Prime Contractor **OR** ____ Sub Contractor to _____

Total Project Cost: $ _____ Your Contract or Subcontract Amount: $ _____

% Complete (if in progress) _____% or Date Completed (if complete): _____

Project Owner: _____

Owner Contact: _____ Phone: ( ) _____

Engineer/Arch. Firm: _____

Engineer/Arch. Contact: _____ Phone: ( ) _____

Your Bonding Company on this project (if any): _____

Project Name: _____

Description/Scope of Bidder's Work: _____

On this project you were a ____ Prime Contractor **OR** ____ Sub Contractor to _____

Total Project Cost: $ _____ Your Contract or Subcontract Amount: $ _____

% Complete (if in progress) _____% or Date Completed (if complete): _____

Project Owner: _____

Owner Contact: _____ Phone: ( ) _____

Engineer/Arch. Firm: _____

Engineer/Arch. Contact: _____ Phone: ( ) _____

Your Bonding Company on this project (if any): _____

BIDDER'S INSURANCE AGENT'S AFFIDAVIT

PROJECT: _____

OWNER: _____

I, _____, _____, first being duly
(Name) (Title)
sworn do state the following:

(a) that I am an Insurance Agent licensed to transact business in the State of Ohio;

(b) that I have reviewed the insurance requirements in the bid documents and have noted therein the requirements on insurance including any policy modifications, cancellation and non-renewal provisions, and any additional policies or endorsements needed;

(c) that I am familiar with the insurance that _____
(Bidder's Company Name)
has in force, and that its insurance meets the contract requirements or that it can be amended or endorsed to meet the contract requirements (with standard industry exclusions) until the current policy expiration or until cancelled with notice per the specifications or additional policies and/or endorsements can be provided to the Contractor;

(d) that all additional policies and/or endorsements required in the specifications are available;

(e) that if an award of contract is made to the Bidder an insurance certificate(s) [most current version ACORD 25] and/or binder(s) which fully complies with all insurance requirements in the contract will be issued within three (3) business days of notification from the contractor and the contractor approving any additional policies or endorsements needed to fully comply with the insurance requirements in the contract;

(f) that I have advised my client of the cost of all additional policies, amendments, and/or endorsements so that he can include same in his bid;

(g) that the cancellation clause in the policy meets the specifications or that it can be amended by an endorsement;

(h) that this document neither affirmatively or negatively amends, extends or alters the terms of or coverage afforded by the policy referenced herein.

Further, Affiant sayeth naught.

_____ _____
(Agent's Signature) Agency Name

_____ _____
(Agent's Name) Agency Address

_____
Agency City, State and Zip Code

_____ _____
(Phone) (Fax)

_____
(E-mail)

SUPPLEMENTAL BOND ACKNOWLEDGEMENT

PROJECT: _____

OWNER: _____

If the bidder submits a Bid Guaranty and Contract Bond (AKA Rollover or Bid/ Performance/ Payment/ Warranty Bond) per O.R.C. Sections 153.54 and 153.571 the following shall be completed, signed, and submitted with the bid:

By submission of the attached bid and these presents, the undersigned bidder and his surety hereby acknowledge that the attached bond shall cover and warrant all work for the correction period per the General Conditions and as supplemented or amended elsewhere in these Contract Documents, which period is __one__ year(s) commencing on the final acceptance of the work by Owner. Any proceeding, legal or equitable, under this Bond may be instituted in any court of competent jurisdiction in the location in which the project or part of the project is located and shall be instituted within one year from the last day of the correction period under the project or within one year after the Surety refuses or fails to perform its obligations under this Bond, whichever first occurs.

BIDDER		**SURETY**	
SIGNATURE:	_____	SIGNATURE:	_____
NAME:	_____	NAME:	_____
TITLE:	_____	TITLE:	_____
DATE:	_____	DATE:	_____
PHONE NO.:	_____	PHONE NO.:	_____

*Attach Power of Attorney

If the Bidder submits a Certified or Cashier's check, Irrevocable Letter of Credit and is awarded a contract by the Owner, the following shall be completed, signed, and submitted with the Contract Bond (AKA Performance/Payment/Warranty Bond) per ORC Sections 153.54 and 153.57.

By signature of the attached Contract and these presents the undersigned contractor and his surety acknowledge that the attached Bond shall cover and warrant all work for the correction period per the General Conditions and as supplemented or amended elsewhere in these Contract Documents, which period is _one__ year(s) commencing on the final acceptance of the work by Owner. Any proceeding, legal or equitable, under this Bond may be instituted in any court of competent jurisdiction in the location in which the project or part of the project is located and shall be instituted within one year from the last day of the correction period under the project or within one year after the Surety refuses or fails to perform its obligations under this Bond, whichever first occurs.

BIDDER		**SURETY**	
SIGNATURE:	_____	SIGNATURE:	_____
NAME:	_____	NAME:	_____
TITLE:	_____	TITLE:	_____
DATE:	_____	DATE:	_____
PHONE NO.:	_____	PHONE NO.:	_____

*Attach Power of Attorney

BID SECURITY

CONTRACTOR SHALL STAPLE ONE OF THE FOLLOWING FORMS OF BID SECURITY TO THE FRONT OF THIS PAGE AND SUBMIT WITH THE BID.

CERTIFIED OR CASHIER'S CHECK FOR 10% OF THE AMOUNT BID

OR

IRREVOCABLE LETTER OF CREDIT FOR 10% OF THE AMOUNT BID

OR

BOND (BID/PERFORMANCE/PAYMENT" BOND, a.k.a., "ROLLOVER BOND") FOR

100% OF THE AMOUNT BID PER ORC SECTIONS 153.54 AND 153.571

STATEMENT OF BIDDER QUALIFICATIONS

BIDDER NAME (print/type): _____

BIDDER ADDRESS: _____

_____

BIDDER CONTACT: _____

BIDDER PHONE NUMBER: _____

BIDDER FAX NUMBER: _____

BIDDER E-MAIL: _____

Federal Tax Identification Number: _____

State Tax Identification Number: _____

STATEMENT OF BIDDER QUALIFICATIONS

1. Years in business providing the goods or service requested in this bid. _____

2. Please list on a separate sheet(s), contracts with municipalities previous and presently held. Please list by community name, contact person, address, phone number, and scope of project (starting with the most recent).

3. Is your company in satisfactory financial condition? Yes_____ No _____

4. How many miles is your facility from the Mentor Municipal Center? _____

5. Please list on a separate sheet(s) the equipment to be used in fulfilling this contract.

6. Identify the project manager who will be assigned to this project and applicable years of experience managing comparable jobs.

_____

For the following questions, on a separate sheet please describe in full the circumstances for any "Yes" answer.

7. Has your company had any business interruptions as a result of financial conditions in the past two (2) years? Yes_____ No _____

8. Has your company been rejected for a public contract despite being a low bidder for any reason? Yes_____ No _____

9. Has your company had any claims against or a performance bond cancelled? Yes_____ No _____

10. Has your company paid penalties or liquidated damages imposed as a result of delay on a public project? Yes_____ No _____

11. Has your company been found to have committed an unfair labor practice or any other employment/labor law violation in such areas as discrimination, prevailing wage, Workers Compensation or OSHA? Yes_____ No _____

12. Has your company in the last three (3) years had a municipal contract cancelled or terminated? Yes_____ No _____

PROPOSAL TO THE CITY OF MENTOR

For 2015 Pavement Repair Program - CONTRACT A (Asphalt Pavement Planing, Resurfacing)

REF. NO.	DESCRIPTION	QTY.	MEASURE UNITS	UNIT PRICE LABOR	UNIT PRICE MATERIAL	TOTAL UNIT PRICE	ITEM TOTAL
1	(253) PAVEMENT REPAIR, AS PER PLAN	1,500.00	SQ YD	$	$	$	$
2	(251) 3 INCH PARTIAL DEPTH PAVEMENT REPAIR, AS PER PLAN	3,074.00	SQ YD	$	$	$	$
3	(254) PAVEMENT PLANING, BITUMINOUS, AS PER PLAN	24,223.00	SQ YD	$	$	$	$
4	(254) PAVEMENT PLANING, PORTLAND CEMENT CONCRETE, AS PER PLAN	10,267.00	SQ YD	$	$	$	$
5	(407) TACK COAT, TRACKLESS, 702.13, AS PER PLAN	4,873.40	GALLON	$	$	$	$
6	(407) TACK COAT, TRACKLESS, FOR INTERMEDIATE COURSE, AS PER PLAN	1,231.45	GALLON	$	$	$	$
7	(441) ASPHALT CONCRETE INTERMEDIATE COURSE, TYPE 1, (448), PG64-22	1,026.21	CU YD	$	$	$	$
8	(441) ASPHALT CONCRETE SURFACE COURSE, TYPE 1, (448), PG64-22	2,030.58	CU YD	$	$	$	$
9	(SPEC) HYBRID INTERLAYER PAVING MAT, GLASPAVE 25, AS PER PLAN	24,629.00	SQ YD	$	$	$	$
10	(604) MANHOLE/INLET BASIN ADJUSTED TO GRADE	56.00	EACH	$	$	$	$
11	(604) MONUMENT BOX ADJUSTED TO GRADE	29.00	EACH	$	$	$	$
12	(632) DETECTOR LOOP, QUADRUPOLE, 6' X 30'	5.00	EACH	$	$	$	$
13	(642) CROSSWALK LINE	457.00	L. F.	$	$	$	$
14	(642) STOP LINE	144.00	L. F.	$	$	$	$
15	(642) CHANNEL LINE	546.00	L. F.	$	$	$	$
16	(642) CENTER LINE	0.51	MILE	$	$	$	$
17	(642) ARROW	8.00	EACH	$	$	$	$
18	(642) ONLY	5.00	EACH	$	$	$	$
19	(SPC) BONDS AND INSURANCES, AS PER PLAN	1.00	LUMP	$	$	$	$
20	(SPC) PRE-CONSTRUCTION VIDEO, AS PER PLAN	1.00	LUMP	$	$	$	$
21	(614) MAINTAINING TRAFFIC	1.00	LUMP	$	$	$	$
22	(624) MOBILIZATION	1.00	LUMP	$	$	$	$
23	CONTINGENCY	1.00	LUMP	XXXXXXXXX	XXXXXXXXX	$60,000.00	$60,000.00

INFORMAL TOTAL BID $

PROPOSAL TO THE CITY OF MENTOR

For 2015 Pavement Repair Program - CONTRACT A - ALTERNATE 1 (Asphalt Pavement Planing, Resurfacing - Parker & Old Munson)

REF. NO.	DESCRIPTION	QTY.	MEASURE UNITS	UNIT PRICE LABOR	UNIT PRICE MATERIAL	TOTAL UNIT PRICE	ITEM TOTAL
1	(253) PAVEMENT REPAIR, AS PER PLAN	230.00	SQ YD	$	$	$	$
2	(254) PAVEMENT PLANING, BITUMINOUS, AS PER PLAN	4,580.00	SQ YD	$	$	$	$
3	(407) TACK COAT, TRACKLESS, 702.13, AS PER PLAN	458.00	GALLON	$	$	$	$
4	(441) ASPHALT CONCRETE SURFACE COURSE, TYPE 1, (448), PG64-22	190.83	CU YD	$	$	$	$

INFORMAL TOTAL BID $

PROPOSAL TO THE CITY OF MENTOR
For 2015 Pavement Repair Program - CONTRACT B (Concrete Pavement Repairs)

REF. NO.	DESCRIPTION	QTY.	MEASURE UNITS	UNIT PRICE LABOR	UNIT PRICE MATERIAL	TOTAL UNIT PRICE	ITEM TOTAL
1	(255) FULL DEPTH PAVEMENT REMOVAL AND RIGID REPLACEMENT, CLASS MS, AS PER PLAN	3,400.00	SQ YD	$	$	$	$
2	(SPC) BONDS AND INSURANCES, AS PER PLAN	1.00	LUMP	$	$	$	$
3	(614) MAINTAINING TRAFFIC	1.00	LUMP	$	$	$	$
4	CONTINGENCY	1.00	LUMP	XXXXXXXXX	XXXXXXXXX	$30,000.00	$30,000.00

INFORMAL TOTAL BID $

PROPOSAL TO THE CITY OF MENTOR
For 2015 Pavement Repair Program - CONTRACT B, ALTERNATE 1 (Concrete Pavement Repairs)

REF. NO.	DESCRIPTION	QTY.	MEASURE UNITS	UNIT PRICE LABOR	UNIT PRICE MATERIAL	TOTAL UNIT PRICE	ITEM TOTAL
1	(255) FULL DEPTH PAVEMENT REMOVAL AND RIGID REPLACEMENT, CLASS QC MS, FULL SLAB, AS PER PLAN	750.00	SQ YD	$	$	$	$

INFORMAL TOTAL BID $

SECTION 2
CONTRACT FORMS

NOTICE OF AWARD

To: _____ Date: _____
_____
_____

PROJECT : _____

You are notified that your Bid which was opened on _____ , 20____ has been accepted for items in the amount of $_____.

You are required by the Instructions to Bidders to execute the Agreement and furnish the required Bonds, Certificates of Insurance, and other documents within 10 calendar days from the date of this Notice.

Failure to comply with these conditions within the time specified will entitle Owner to consider your Bid in default, to annul this Notice and to declare your Bid Security forfeited.

The Owner will return to you two (2) fully signed copies of the contract documents.

ACKNOWLEDGMENT OF AWARD

CONTRACTOR

_____

_____
Date

CONTRACT

FOR _____

THIS AGREEMENT, made and entered into at _____ this _____ day of _____, 20_____, by and between the _____, OWNER, and _____ _____, (a corporation, partnership, or individual) CONTRACTOR.

WITNESSETH: That the said CONTRACTOR has agreed and by this presents does agree with the OWNER for the consideration hereinafter mentioned and contained, and under penalty expressed in a bond bearing even date with these presents, and herein contained or hereunto annexed, to furnish at his own cost and expense, all the necessary tools, materials, labor, and tests in an expeditious, substantial and workmanlike manner, the equipment and appurtenances herein contemplated, commencing work within 20 days from the date of the Notice to Proceed and executing the work within the time and in the manner specified and in conformity with the requirements set forth in this Contract.

The following documents form essential parts of the Contract:

1. Advertisement for Bids/Public Notice to Bidders
2. Instruction to Bidders
3. Bid Forms and Proposal
4. Contract Forms and Exhibits
5. Contract Bond – ORC 153.571 or ORC 153.57
6. Contract Provisions
7. General Conditions – EJCDC.1910-8
8. Supplementary Conditions
9. Specifications
10. Specific Project Requirements
11. Prevailing Wage Rate Schedule
12. Contract Drawings

The CONTRACTOR agrees and understands that the work on this contract shall be subject to the acceptance of the OWNER based upon and in accordance with the contract specifications and contract plans and drawings on file in the office of the OWNER.

The Contractor agrees that each individual employed by the Contractor or any Subcontractor engaged in work on the project under this contract shall be paid by prevailing wage established by the Department of Industrial Relations of the State of Ohio or the U.S. Department of Labor (Davis-Bacon Act) as detailed in the section titled "Wage Rates." This shall occur regardless of any contractual relationship which may be said to exist between the Contractor or any Subcontractor and such individual.

The CONTRACTOR shall proceed with the said work in a prompt and diligent manner and shall do the several parts thereof, at such times and in such order as the OWNER may direct. Further he shall complete the whole of said work in accordance with the specifications and contract drawings to the satisfaction of the OWNER on or before the time stated, and in default of completion within the time as fixed, the CONTRACTOR shall pay to the OWNER as liquidated damages, an amount equal to

_____ Dollars ($_____), for each and every day (Sundays and legal holidays excepted) the completion of the work may be delayed beyond the date fixed in the manner and as stipulated.

It is hereby mutually agreed that the OWNER is to pay and the CONTRACTOR is to receive, as full compensation for furnishing all materials and labor in building, constructing and testing and in all respect completing the herein described work and appurtenances in the manner and under the conditions herein specified, the prices stipulated in the proposal herein contained or hereto annexed and the total contract sum is $_____.

This Contract shall be in full force and effect from the date of execution by the parties.

IN WITNESS WHEREOF: The parties hereunto affixed their signatures the day and year first mentioned above.

CONTRACTOR

BY _____

OWNER

BY: _____

I hereby certify that the amount of funds in the sum of _____ Dollars ($ _____) necessary for the foregoing Contract are appropriated and in the Treasury, or are in the process of collection, or are available through grants and/or loans from other funding sources.

BY: _____
Director of Finance/Budget Director/Auditor

APPROVED AS TO FORM:

BY: _____
Director of Law/Solicitor/Prosecutor

THE CONTRACTOR SHALL FURNISH THE FOLLOWING ITEMS WITHIN 10 DAYS OF NOTIFICATION OF AWARD:

A) CERTIFICATE OF INSURANCE FOR CONTRACTOR'S PUBLIC LIABILITY INSURANCE POLICY

B) CERTIFICATE OF INSURANCE FOR OWNER'S AND CONTRACTOR'S PROTECTIVE POLICY

C) CERTIFICATE OF WORKER'S COMPENSATION

D) CONTRACT BOND THAT COMPLIES WITH ORC 153.54 AND 153.57

* D above is not required if a bond complying with ORC 153.54 and 153.571 (rollover bond) was submitted at time of bid.

DELINQUENT PERSONAL PROPERTY STATEMENT

_____, having been awarded a contract by _____; hereby affirms under oath, pursuant to Ohio Revised Code Section 5719.042, that at the time the bid was submitted, my company **was / was not** charged with delinquent personal property taxes on the General Tax List of Personal Property for _____ County, Ohio.

If such charge for delinquent personal property tax exists on the General Tax List of Personal Property for _____ County, Ohio, the amount of such due and unpaid delinquent taxes, including due and unpaid penalties and interest shall be set forth below.

A copy of this statement shall be transmitted by the Taxing District's Fiscal Officer to the County Treasurer within thirty days of the date it is submitted. A copy of this statement shall also be incorporated into the Contract made between _____ and _____ and no payment shall be made with respect to any Contract unless such statement has been so incorporated as a part thereof.

Delinquent Personal Property Tax	$_____
Penalties	$_____
Interest	$_____

CONTRACTOR

_____

Subscribed in my presence, and sworn to before me, this ___ day of _____, 20_____.

_____
Notary Public

NOTICE TO PROCEED

Project: _____

Owner: _____

To: _____

_____

_____

Date: _____

You are hereby notified to commence work in accordance with the Contract dated _____, 20__. All work shall be completed by _____, 20__.

OWNER

_____

CONTRACTOR SHALL COMPLETE THE FOLLOWING AND RETURN WITHIN 10 DAYS OF NOTICE OF AWARD:

A) AFFIDAVIT OF COMPLIANCE WITH POLITICAL CONTRIBUTIONS LIMITATION (ORC 3517.13)

THE OWNER OR THEIR AUTHORIZED REPRESENTATIVE SHALL INSERT THE FOLLOWING CONTRACT DOCUMENTATION IN THE EXECUTED CONTRACT:

A) FINDINGS FOR RECOVERY – ORC 9.24

B) NOTIFICATION OF SURETY AND AGENT OF CONSTRUCTION CONTRACT AWARD – ORC 9.32 (if applicable)

C) NOTIFICATION TO UTILITY COMPANIES OF COMMENCEMENT OF CONTRACT EXECUTION – ORC 153.64 (if applicable)

AFFIDAVIT

OF COMPLIANCE WITH OHIO REVISED CODE SECTION 3517.13

STATE OF OHIO

COUNTY OF _____

_____ being duly sworn deposes and states as follows:

1. I am duly authorized to make the statements contained herein on behalf of _____ (the "Contracting Party").

2. The Contracting Party is a/an (select one):

   ☐ Individual, partnership, or other unincorporated business association (including without limitation, a professional association organized under Ohio Revised Code Chapter 1787), estate, or trust

   ☐ Corporation organized and existing under the laws of the State of _____

   ☐ Labor organization

3. I hereby affirm that the Contracting Party and each of the individuals specified in R.C. 3517.13(I) (with respect to non-corporate entities and labor organizations) or R.C. 3517.13(J) (with respect to corporations) are in full compliance with the political contribution limitations set forth in R.C. 3517.13(I) and (J), as applicable.

4. I understand that a false representation on this certification will incur penalties pursuant to 3517.992(R)(3).

Affiant further sayeth naught.

By:_____

Title: _____

SWORN TO BEFORE ME and subscribed in my presence this _____ day

of _____ , 20____

_____

Notary Public

My commission expires: _____

SECTION 3
GENERAL CONDITIONS

This document has important legal consequences; consultation with an attorney is encouraged with respect to its use or modification. This document should be adapted to the particular circumstances of the contemplated Project and the controlling Laws and Regulations.

STANDARD GENERAL CONDITIONS OF THE CONSTRUCTION CONTRACT

Prepared by

ENGINEERS JOINT CONTRACT DOCUMENTS COMMITTEE

and

Issued and Published Jointly by

AMERICAN COUNCIL OF ENGINEERING COMPANIES

ASSOCIATED GENERAL CONTRACTORS OF AMERICA

AMERICAN SOCIETY OF CIVIL ENGINEERS

PROFESSIONAL ENGINEERS IN PRIVATE PRACTICE
A Practice Division of the
NATIONAL SOCIETY OF PROFESSIONAL ENGINEERS

Endorsed by

CONSTRUCTION SPECIFICATIONS INSTITUTE

Copyright © 2007 National Society of Professional Engineers for EJCDC. All rights reserved.

These General Conditions have been prepared for use with the Suggested Forms of Agreement Between Owner and Contractor (EJCDC C-520 or C-525, 2007 Editions). Their provisions are interrelated and a change in one may necessitate a change in the other. Comments concerning their usage are contained in the Narrative Guide to the EJCDC Construction Documents (EJCDC C-001, 2007 Edition). For guidance in the preparation of Supplementary Conditions, see Guide to the Preparation of Supplementary Conditions (EJCDC C-800, 2007 Edition).

Copyright © 2007 National Society of Professional Engineers
1420 King Street, Alexandria, VA 22314-2794
(703) 684-2882
www.nspe.org

American Council of Engineering Companies
1015 15th Street N.W., Washington, DC 20005
(202) 347-7474
www.acec.org

American Society of Civil Engineers
1801 Alexander Bell Drive, Reston, VA 20191-4400
(800) 548-2723
www.asce.org

Associated General Contractors of America
2300 Wilson Boulevard, Suite 400, Arlington, VA 22201-3308
(703) 548-3118
www.agc.org

The copyright for this EJCDC document is owned jointly by the four
EJCDC sponsoring organizations and held in trust for their benefit by NSPE.

Copyright © 2007 National Society of Professional Engineers for EJCDC. All rights reserved.

STANDARD GENERAL CONDITIONS OF THE CONSTRUCTION CONTRACT

TABLE OF CONTENTS

Page

Article 1 – Definitions and Terminology 1
1.01 Defined Terms 1
1.02 Terminology 5

Article 2 – Preliminary Matters 6
2.01 Delivery of Bonds and Evidence of Insurance 6
2.02 Copies of Documents 6
2.03 Commencement of Contract Times; Notice to Proceed 6
2.04 Starting the Work 7
2.05 Before Starting Construction 7
2.06 Preconstruction Conference; Designation of Authorized Representatives 7
2.07 Initial Acceptance of Schedules 7

Article 3 – Contract Documents: Intent, Amending, Reuse 8
3.01 Intent 8
3.02 Reference Standards 8
3.03 Reporting and Resolving Discrepancies 9
3.04 Amending and Supplementing Contract Documents 9
3.05 Reuse of Documents 10
3.06 Electronic Data 10

Article 4 – Availability of Lands; Subsurface and Physical Conditions; Hazardous Environmental Conditions; Reference Points 11
4.01 Availability of Lands 11
4.02 Subsurface and Physical Conditions 11
4.03 Differing Subsurface or Physical Conditions 12
4.04 Underground Facilities 13
4.05 Reference Points 14
4.06 Hazardous Environmental Condition at Site 14

Article 5 – Bonds and Insurance 16
5.01 Performance, Payment, and Other Bonds 16
5.02 Licensed Sureties and Insurers 16
5.03 Certificates of Insurance 17
5.04 Contractor's Insurance 17
5.05 Owner's Liability Insurance 19
5.06 Property Insurance 19
5.07 Waiver of Rights 20
5.08 Receipt and Application of Insurance Proceeds 21

Copyright © 2007 National Society of Professional Engineers for EJCDC. All rights reserved.

5.09 Acceptance of Bonds and Insurance; Option to Replace 21
5.10 Partial Utilization, Acknowledgment of Property Insurer 22

Article 6 – Contractor's Responsibilities 22
6.01 Supervision and Superintendence 22
6.02 Labor; Working Hours 22
6.03 Services, Materials, and Equipment 22
6.04 Progress Schedule 23
6.05 Substitutes and "Or-Equals" 23
6.06 Concerning Subcontractors, Suppliers, and Others 25
6.07 Patent Fees and Royalties 27
6.08 Permits 27
6.09 Laws and Regulations 28
6.10 Taxes 28
6.11 Use of Site and Other Areas 28
6.12 Record Documents 29
6.13 Safety and Protection 29
6.14 Safety Representative 30
6.15 Hazard Communication Programs 30
6.16 Emergencies 30
6.17 Shop Drawings and Samples 31
6.18 Continuing the Work 32
6.19 Contractor's General Warranty and Guarantee 33
6.20 Indemnification 33
6.21 Delegation of Professional Design Services 34

Article 7 – Other Work at the Site 35
7.01 Related Work at Site 35
7.02 Coordination 35
7.03 Legal Relationships 36

Article 8 – Owner's Responsibilities 36
8.01 Communications to Contractor 36
8.02 Replacement of Engineer 36
8.03 Furnish Data 36
8.04 Pay When Due 36
8.05 Lands and Easements; Reports and Tests 36
8.06 Insurance 36
8.07 Change Orders 37
8.08 Inspections, Tests, and Approvals 37
8.09 Limitations on Owner's Responsibilities 37
8.10 Undisclosed Hazardous Environmental Condition 37
8.11 Evidence of Financial Arrangements 37
8.12 Compliance with Safety Program 37

Article 9 – Engineer's Status During Construction 37
9.01 Owner's Representative 37

Copyright © 2007 National Society of Professional Engineers for EJCDC. All rights reserved.

9.02 Visits to Site 37
9.03 Project Representative 38
9.04 Authorized Variations in Work 38
9.05 Rejecting Defective Work 38
9.06 Shop Drawings, Change Orders and Payments 39
9.07 Determinations for Unit Price Work 39
9.08 Decisions on Requirements of Contract Documents and Acceptability of Work 39
9.09 Limitations on Engineer's Authority and Responsibilities 39
9.10 Compliance with Safety Program 40

Article 10 – Changes in the Work; Claims 40
10.01 Authorized Changes in the Work 40
10.02 Unauthorized Changes in the Work 41
10.03 Execution of Change Orders 41
10.04 Notification to Surety 41
10.05 Claims 41

Article 11 – Cost of the Work; Allowances; Unit Price Work 42
11.01 Cost of the Work 42
11.02 Allowances 45
11.03 Unit Price Work 45

Article 12 – Change of Contract Price; Change of Contract Times 46
12.01 Change of Contract Price 46
12.02 Change of Contract Times 47
12.03 Delays 47

Article 13 – Tests and Inspections; Correction, Removal or Acceptance of Defective Work 48
13.01 Notice of Defects 48
13.02 Access to Work 48
13.03 Tests and Inspections 49
13.04 Uncovering Work 49
13.05 Owner May Stop the Work 50
13.06 Correction or Removal of Defective Work 50
13.07 Correction Period 50
13.08 Acceptance of Defective Work 51
13.09 Owner May Correct Defective Work 52

Article 14 – Payments to Contractor and Completion 52
14.01 Schedule of Values 52
14.02 Progress Payments 52
14.03 Contractor's Warranty of Title 55
14.04 Substantial Completion 55
14.05 Partial Utilization 56
14.06 Final Inspection 57
14.07 Final Payment 57
14.08 Final Completion Delayed 58

Copyright © 2007 National Society of Professional Engineers for EJCDC. All rights reserved.

14.09 Waiver of Claims 58

Article 15 – Suspension of Work and Termination 59
15.01 Owner May Suspend Work 59
15.02 Owner May Terminate for Cause 59
15.03 Owner May Terminate For Convenience 60
15.04 Contractor May Stop Work or Terminate 60

Article 16 – Dispute Resolution 61
16.01 Methods and Procedures 61

Article 17 – Miscellaneous 61
17.01 Giving Notice 61
17.02 Computation of Times 62
17.03 Cumulative Remedies 62
17.04 Survival of Obligations 62
17.05 Controlling Law 62
17.06 Headings 62

Copyright © 2007 National Society of Professional Engineers for EJCDC. All rights reserved.

ARTICLE 1 – DEFINITIONS AND TERMINOLOGY

1.01 *Defined Terms*

A. Wherever used in the Bidding Requirements or Contract Documents and printed with initial capital letters, the terms listed below will have the meanings indicated which are applicable to both the singular and plural thereof. In addition to terms specifically defined, terms with initial capital letters in the Contract Documents include references to identified articles and paragraphs, and the titles of other documents or forms.

1. *Addenda*—Written or graphic instruments issued prior to the opening of Bids which clarify, correct, or change the Bidding Requirements or the proposed Contract Documents.

2. *Agreement*—The written instrument which is evidence of the agreement between Owner and Contractor covering the Work.

3. *Application for Payment*—The form acceptable to Engineer which is to be used by Contractor during the course of the Work in requesting progress or final payments and which is to be accompanied by such supporting documentation as is required by the Contract Documents.

4. *Asbestos*—Any material that contains more than one percent asbestos and is friable or is releasing asbestos fibers into the air above current action levels established by the United States Occupational Safety and Health Administration.

5. *Bid*—The offer or proposal of a Bidder submitted on the prescribed form setting forth the prices for the Work to be performed.

6. *Bidder*—The individual or entity who submits a Bid directly to Owner.

7. *Bidding Documents*—The Bidding Requirements and the proposed Contract Documents (including all Addenda).

8. *Bidding Requirements*—The advertisement or invitation to bid, Instructions to Bidders, Bid security of acceptable form, if any, and the Bid Form with any supplements.

9. *Change Order*—A document recommended by Engineer which is signed by Contractor and Owner and authorizes an addition, deletion, or revision in the Work or an adjustment in the Contract Price or the Contract Times, issued on or after the Effective Date of the Agreement.

10. *Claim*—A demand or assertion by Owner or Contractor seeking an adjustment of Contract Price or Contract Times, or both, or other relief with respect to the terms of the Contract. A demand for money or services by a third party is not a Claim.

11. *Contract*—The entire and integrated written agreement between the Owner and Contractor concerning the Work. The Contract supersedes prior negotiations, representations, or agreements, whether written or oral.

Copyright © 2007 National Society of Professional Engineers for EJCDC. All rights reserved.

12. *Contract Documents*—Those items so designated in the Agreement. Only printed or hard copies of the items listed in the Agreement are Contract Documents. Approved Shop Drawings, other Contractor submittals, and the reports and drawings of subsurface and physical conditions are not Contract Documents.

13. *Contract Price*—The moneys payable by Owner to Contractor for completion of the Work in accordance with the Contract Documents as stated in the Agreement (subject to the provisions of Paragraph 11.03 in the case of Unit Price Work).

14. *Contract Times*—The number of days or the dates stated in the Agreement to: (i) achieve Milestones, if any; (ii) achieve Substantial Completion; and (iii) complete the Work so that it is ready for final payment as evidenced by Engineer's written recommendation of final payment.

15. *Contractor*—The individual or entity with whom Owner has entered into the Agreement.

16. *Cost of the Work*—See Paragraph 11.01 for definition.

17. *Drawings*—That part of the Contract Documents prepared or approved by Engineer which graphically shows the scope, extent, and character of the Work to be performed by Contractor. Shop Drawings and other Contractor submittals are not Drawings as so defined.

18. *Effective Date of the Agreement*—The date indicated in the Agreement on which it becomes effective, but if no such date is indicated, it means the date on which the Agreement is signed and delivered by the last of the two parties to sign and deliver.

19. *Engineer*—The individual or entity named as such in the Agreement.

20. *Field Order*—A written order issued by Engineer which requires minor changes in the Work but which does not involve a change in the Contract Price or the Contract Times.

21. *General Requirements*—Sections of Division 1 of the Specifications.

22. *Hazardous Environmental Condition*—The presence at the Site of Asbestos, PCBs, Petroleum, Hazardous Waste, or Radioactive Material in such quantities or circumstances that may present a substantial danger to persons or property exposed thereto.

23. *Hazardous Waste*—The term Hazardous Waste shall have the meaning provided in Section 1004 of the Solid Waste Disposal Act (42 USC Section 6903) as amended from time to time.

24. *Laws and Regulations; Laws or Regulations*—Any and all applicable laws, rules, regulations, ordinances, codes, and orders of any and all governmental bodies, agencies, authorities, and courts having jurisdiction.

25. *Liens*—Charges, security interests, or encumbrances upon Project funds, real property, or personal property.

26. *Milestone*—A principal event specified in the Contract Documents relating to an intermediate completion date or time prior to Substantial Completion of all the Work.

Copyright © 2007 National Society of Professional Engineers for EJCDC. All rights reserved.

27. *Notice of Award*—The written notice by Owner to the Successful Bidder stating that upon timely compliance by the Successful Bidder with the conditions precedent listed therein, Owner will sign and deliver the Agreement.

28. *Notice to Proceed*—A written notice given by Owner to Contractor fixing the date on which the Contract Times will commence to run and on which Contractor shall start to perform the Work under the Contract Documents.

29. *Owner*—The individual or entity with whom Contractor has entered into the Agreement and for whom the Work is to be performed.

30. *PCBs*—Polychlorinated biphenyls.

31. *Petroleum*—Petroleum, including crude oil or any fraction thereof which is liquid at standard conditions of temperature and pressure (60 degrees Fahrenheit and 14.7 pounds per square inch absolute), such as oil, petroleum, fuel oil, oil sludge, oil refuse, gasoline, kerosene, and oil mixed with other non-Hazardous Waste and crude oils.

32. *Progress Schedule*—A schedule, prepared and maintained by Contractor, describing the sequence and duration of the activities comprising the Contractor's plan to accomplish the Work within the Contract Times.

33. *Project*—The total construction of which the Work to be performed under the Contract Documents may be the whole, or a part.

34. *Project Manual*—The bound documentary information prepared for bidding and constructing the Work. A listing of the contents of the Project Manual, which may be bound in one or more volumes, is contained in the table(s) of contents.

35. *Radioactive Material*—Source, special nuclear, or byproduct material as defined by the Atomic Energy Act of 1954 (42 USC Section 2011 et seq.) as amended from time to time.

36. *Resident Project Representative*—The authorized representative of Engineer who may be assigned to the Site or any part thereof.

37. *Samples*—Physical examples of materials, equipment, or workmanship that are representative of some portion of the Work and which establish the standards by which such portion of the Work will be judged.

38. *Schedule of Submittals*—A schedule, prepared and maintained by Contractor, of required submittals and the time requirements to support scheduled performance of related construction activities.

39. *Schedule of Values*—A schedule, prepared and maintained by Contractor, allocating portions of the Contract Price to various portions of the Work and used as the basis for reviewing Contractor's Applications for Payment.

Copyright © 2007 National Society of Professional Engineers for EJCDC. All rights reserved.

40. *Shop Drawings*—All drawings, diagrams, illustrations, schedules, and other data or information which are specifically prepared or assembled by or for Contractor and submitted by Contractor to illustrate some portion of the Work.

41. *Site*—Lands or areas indicated in the Contract Documents as being furnished by Owner upon which the Work is to be performed, including rights-of-way and easements for access thereto, and such other lands furnished by Owner which are designated for the use of Contractor.

42. *Specifications*—That part of the Contract Documents consisting of written requirements for materials, equipment, systems, standards and workmanship as applied to the Work, and certain administrative requirements and procedural matters applicable thereto.

43. *Subcontractor*—An individual or entity having a direct contract with Contractor or with any other Subcontractor for the performance of a part of the Work at the Site.

44. *Substantial Completion*—The time at which the Work (or a specified part thereof) has progressed to the point where, in the opinion of Engineer, the Work (or a specified part thereof) is sufficiently complete, in accordance with the Contract Documents, so that the Work (or a specified part thereof) can be utilized for the purposes for which it is intended. The terms "substantially complete" and "substantially completed" as applied to all or part of the Work refer to Substantial Completion thereof.

45. *Successful Bidder*—The Bidder submitting a responsive Bid to whom Owner makes an award.

46. *Supplementary Conditions*—That part of the Contract Documents which amends or supplements these General Conditions.

47. *Supplier*—A manufacturer, fabricator, supplier, distributor, materialman, or vendor having a direct contract with Contractor or with any Subcontractor to furnish materials or equipment to be incorporated in the Work by Contractor or Subcontractor.

48. *Underground Facilities*—All underground pipelines, conduits, ducts, cables, wires, manholes, vaults, tanks, tunnels, or other such facilities or attachments, and any encasements containing such facilities, including those that convey electricity, gases, steam, liquid petroleum products, telephone or other communications, cable television, water, wastewater, storm water, other liquids or chemicals, or traffic or other control systems.

49. *Unit Price Work*—Work to be paid for on the basis of unit prices.

50. *Work*—The entire construction or the various separately identifiable parts thereof required to be provided under the Contract Documents. Work includes and is the result of performing or providing all labor, services, and documentation necessary to produce such construction, and furnishing, installing, and incorporating all materials and equipment into such construction, all as required by the Contract Documents.

51. *Work Change Directive*—A written statement to Contractor issued on or after the Effective Date of the Agreement and signed by Owner and recommended by Engineer ordering an

Copyright © 2007 National Society of Professional Engineers for EJCDC. All rights reserved.

addition, deletion, or revision in the Work, or responding to differing or unforeseen subsurface or physical conditions under which the Work is to be performed or to emergencies. A Work Change Directive will not change the Contract Price or the Contract Times but is evidence that the parties expect that the change ordered or documented by a Work Change Directive will be incorporated in a subsequently issued Change Order following negotiations by the parties as to its effect, if any, on the Contract Price or Contract Times.

1.02 *Terminology*

A. The words and terms discussed in Paragraph 1.02.B through F are not defined but, when used in the Bidding Requirements or Contract Documents, have the indicated meaning.

B. *Intent of Certain Terms or Adjectives:*

1. The Contract Documents include the terms "as allowed," "as approved," "as ordered," "as directed" or terms of like effect or import to authorize an exercise of professional judgment by Engineer. In addition, the adjectives "reasonable," "suitable," "acceptable," "proper," "satisfactory," or adjectives of like effect or import are used to describe an action or determination of Engineer as to the Work. It is intended that such exercise of professional judgment, action, or determination will be solely to evaluate, in general, the Work for compliance with the information in the Contract Documents and with the design concept of the Project as a functioning whole as shown or indicated in the Contract Documents (unless there is a specific statement indicating otherwise). The use of any such term or adjective is not intended to and shall not be effective to assign to Engineer any duty or authority to supervise or direct the performance of the Work, or any duty or authority to undertake responsibility contrary to the provisions of Paragraph 9.09 or any other provision of the Contract Documents.

C. *Day:*

1. The word "day" means a calendar day of 24 hours measured from midnight to the next midnight.

D. *Defective:*

1. The word "defective," when modifying the word "Work," refers to Work that is unsatisfactory, faulty, or deficient in that it:

a. does not conform to the Contract Documents; or

b. does not meet the requirements of any applicable inspection, reference standard, test, or approval referred to in the Contract Documents; or

c. has been damaged prior to Engineer's recommendation of final payment (unless responsibility for the protection thereof has been assumed by Owner at Substantial Completion in accordance with Paragraph 14.04 or 14.05).

Copyright © 2007 National Society of Professional Engineers for EJCDC. All rights reserved.

E. *Furnish, Install, Perform, Provide:*

1. The word "furnish," when used in connection with services, materials, or equipment, shall mean to supply and deliver said services, materials, or equipment to the Site (or some other specified location) ready for use or installation and in usable or operable condition.

2. The word "install," when used in connection with services, materials, or equipment, shall mean to put into use or place in final position said services, materials, or equipment complete and ready for intended use.

3. The words "perform" or "provide," when used in connection with services, materials, or equipment, shall mean to furnish and install said services, materials, or equipment complete and ready for intended use.

4. When "furnish," "install," "perform," or "provide" is not used in connection with services, materials, or equipment in a context clearly requiring an obligation of Contractor, "provide" is implied.

F. Unless stated otherwise in the Contract Documents, words or phrases that have a well-known technical or construction industry or trade meaning are used in the Contract Documents in accordance with such recognized meaning.

ARTICLE 2 – PRELIMINARY MATTERS

2.01 *Delivery of Bonds and Evidence of Insurance*

A. When Contractor delivers the executed counterparts of the Agreement to Owner, Contractor shall also deliver to Owner such bonds as Contractor may be required to furnish.

B. *Evidence of Insurance:* Before any Work at the Site is started, Contractor and Owner shall each deliver to the other, with copies to each additional insured identified in the Supplementary Conditions, certificates of insurance (and other evidence of insurance which either of them or any additional insured may reasonably request) which Contractor and Owner respectively are required to purchase and maintain in accordance with Article 5.

2.02 *Copies of Documents*

A. Owner shall furnish to Contractor up to ten printed or hard copies of the Drawings and Project Manual. Additional copies will be furnished upon request at the cost of reproduction.

2.03 *Commencement of Contract Times; Notice to Proceed*

A. The Contract Times will commence to run on the thirtieth day after the Effective Date of the Agreement or, if a Notice to Proceed is given, on the day indicated in the Notice to Proceed. A Notice to Proceed may be given at any time within 30 days after the Effective Date of the Agreement. In no event will the Contract Times commence to run later than the sixtieth day after the day of Bid opening or the thirtieth day after the Effective Date of the Agreement, whichever date is earlier.

Copyright © 2007 National Society of Professional Engineers for EJCDC. All rights reserved.

2.04 *Starting the Work*

A. Contractor shall start to perform the Work on the date when the Contract Times commence to run. No Work shall be done at the Site prior to the date on which the Contract Times commence to run.

2.05 *Before Starting Construction*

A. *Preliminary Schedules:* Within 10 days after the Effective Date of the Agreement (unless otherwise specified in the General Requirements), Contractor shall submit to Engineer for timely review:

1. a preliminary Progress Schedule indicating the times (numbers of days or dates) for starting and completing the various stages of the Work, including any Milestones specified in the Contract Documents;

2. a preliminary Schedule of Submittals; and

3. a preliminary Schedule of Values for all of the Work which includes quantities and prices of items which when added together equal the Contract Price and subdivides the Work into component parts in sufficient detail to serve as the basis for progress payments during performance of the Work. Such prices will include an appropriate amount of overhead and profit applicable to each item of Work.

2.06 *Preconstruction Conference; Designation of Authorized Representatives*

A. Before any Work at the Site is started, a conference attended by Owner, Contractor, Engineer, and others as appropriate will be held to establish a working understanding among the parties as to the Work and to discuss the schedules referred to in Paragraph 2.05.A, procedures for handling Shop Drawings and other submittals, processing Applications for Payment, and maintaining required records.

B. At this conference Owner and Contractor each shall designate, in writing, a specific individual to act as its authorized representative with respect to the services and responsibilities under the Contract. Such individuals shall have the authority to transmit instructions, receive information, render decisions relative to the Contract, and otherwise act on behalf of each respective party.

2.07 *Initial Acceptance of Schedules*

A. At least 10 days before submission of the first Application for Payment a conference attended by Contractor, Engineer, and others as appropriate will be held to review for acceptability to Engineer as provided below the schedules submitted in accordance with Paragraph 2.05.A. Contractor shall have an additional 10 days to make corrections and adjustments and to complete and resubmit the schedules. No progress payment shall be made to Contractor until acceptable schedules are submitted to Engineer.

1. The Progress Schedule will be acceptable to Engineer if it provides an orderly progression of the Work to completion within the Contract Times. Such acceptance will not impose on

Copyright © 2007 National Society of Professional Engineers for EJCDC. All rights reserved.

Engineer responsibility for the Progress Schedule, for sequencing, scheduling, or progress of the Work, nor interfere with or relieve Contractor from Contractor's full responsibility therefor.

2. Contractor's Schedule of Submittals will be acceptable to Engineer if it provides a workable arrangement for reviewing and processing the required submittals.

3. Contractor's Schedule of Values will be acceptable to Engineer as to form and substance if it provides a reasonable allocation of the Contract Price to component parts of the Work.

ARTICLE 3 – CONTRACT DOCUMENTS: INTENT, AMENDING, REUSE

3.01 *Intent*

A. The Contract Documents are complementary; what is required by one is as binding as if required by all.

B. It is the intent of the Contract Documents to describe a functionally complete project (or part thereof) to be constructed in accordance with the Contract Documents. Any labor, documentation, services, materials, or equipment that reasonably may be inferred from the Contract Documents or from prevailing custom or trade usage as being required to produce the indicated result will be provided whether or not specifically called for, at no additional cost to Owner.

C. Clarifications and interpretations of the Contract Documents shall be issued by Engineer as provided in Article 9.

3.02 *Reference Standards*

A. Standards, Specifications, Codes, Laws, and Regulations

1. Reference to standards, specifications, manuals, or codes of any technical society, organization, or association, or to Laws or Regulations, whether such reference be specific or by implication, shall mean the standard, specification, manual, code, or Laws or Regulations in effect at the time of opening of Bids (or on the Effective Date of the Agreement if there were no Bids), except as may be otherwise specifically stated in the Contract Documents.

2. No provision of any such standard, specification, manual, or code, or any instruction of a Supplier, shall be effective to change the duties or responsibilities of Owner, Contractor, or Engineer, or any of their subcontractors, consultants, agents, or employees, from those set forth in the Contract Documents. No such provision or instruction shall be effective to assign to Owner, Engineer, or any of their officers, directors, members, partners, employees, agents, consultants, or subcontractors, any duty or authority to supervise or direct the performance of the Work or any duty or authority to undertake responsibility inconsistent with the provisions of the Contract Documents.

Copyright © 2007 National Society of Professional Engineers for EJCDC. All rights reserved.

3.03 *Reporting and Resolving Discrepancies*

A. *Reporting Discrepancies:*

1. *Contractor's Review of Contract Documents Before Starting Work*: Before undertaking each part of the Work, Contractor shall carefully study and compare the Contract Documents and check and verify pertinent figures therein and all applicable field measurements. Contractor shall promptly report in writing to Engineer any conflict, error, ambiguity, or discrepancy which Contractor discovers, or has actual knowledge of, and shall obtain a written interpretation or clarification from Engineer before proceeding with any Work affected thereby.

2. *Contractor's Review of Contract Documents During Performance of Work*: If, during the performance of the Work, Contractor discovers any conflict, error, ambiguity, or discrepancy within the Contract Documents, or between the Contract Documents and (a) any applicable Law or Regulation , (b) any standard, specification, manual, or code, or (c) any instruction of any Supplier, then Contractor shall promptly report it to Engineer in writing. Contractor shall not proceed with the Work affected thereby (except in an emergency as required by Paragraph 6.16.A) until an amendment or supplement to the Contract Documents has been issued by one of the methods indicated in Paragraph 3.04.

3. Contractor shall not be liable to Owner or Engineer for failure to report any conflict, error, ambiguity, or discrepancy in the Contract Documents unless Contractor had actual knowledge thereof.

B. *Resolving Discrepancies:*

1. Except as may be otherwise specifically stated in the Contract Documents, the provisions of the Contract Documents shall take precedence in resolving any conflict, error, ambiguity, or discrepancy between the provisions of the Contract Documents and:

   a. the provisions of any standard, specification, manual, or code, or the instruction of any Supplier (whether or not specifically incorporated by reference in the Contract Documents); or

   b. the provisions of any Laws or Regulations applicable to the performance of the Work (unless such an interpretation of the provisions of the Contract Documents would result in violation of such Law or Regulation).

3.04 *Amending and Supplementing Contract Documents*

A. The Contract Documents may be amended to provide for additions, deletions, and revisions in the Work or to modify the terms and conditions thereof by either a Change Order or a Work Change Directive.

B. The requirements of the Contract Documents may be supplemented, and minor variations and deviations in the Work may be authorized, by one or more of the following ways:

Copyright © 2007 National Society of Professional Engineers for EJCDC. All rights reserved.

1. A Field Order;

2. Engineer's approval of a Shop Drawing or Sample (subject to the provisions of Paragraph 6.17.D.3); or

3. Engineer's written interpretation or clarification.

3.05 *Reuse of Documents*

A. Contractor and any Subcontractor or Supplier shall not:

1. have or acquire any title to or ownership rights in any of the Drawings, Specifications, or other documents (or copies of any thereof) prepared by or bearing the seal of Engineer or its consultants, including electronic media editions; or

2. reuse any such Drawings, Specifications, other documents, or copies thereof on extensions of the Project or any other project without written consent of Owner and Engineer and specific written verification or adaptation by Engineer.

B. The prohibitions of this Paragraph 3.05 will survive final payment, or termination of the Contract. Nothing herein shall preclude Contractor from retaining copies of the Contract Documents for record purposes.

3.06 *Electronic Data*

A. Unless otherwise stated in the Supplementary Conditions, the data furnished by Owner or Engineer to Contractor, or by Contractor to Owner or Engineer, that may be relied upon are limited to the printed copies (also known as hard copies). Files in electronic media format of text, data, graphics, or other types are furnished only for the convenience of the receiving party. Any conclusion or information obtained or derived from such electronic files will be at the user's sole risk. If there is a discrepancy between the electronic files and the hard copies, the hard copies govern.

B. Because data stored in electronic media format can deteriorate or be modified inadvertently or otherwise without authorization of the data's creator, the party receiving electronic files agrees that it will perform acceptance tests or procedures within 60 days, after which the receiving party shall be deemed to have accepted the data thus transferred. Any errors detected within the 60-day acceptance period will be corrected by the transferring party.

C. When transferring documents in electronic media format, the transferring party makes no representations as to long term compatibility, usability, or readability of documents resulting from the use of software application packages, operating systems, or computer hardware differing from those used by the data's creator.

Copyright © 2007 National Society of Professional Engineers for EJCDC. All rights reserved.

ARTICLE 4 – AVAILABILITY OF LANDS; SUBSURFACE AND PHYSICAL CONDITIONS; HAZARDOUS ENVIRONMENTAL CONDITIONS; REFERENCE POINTS

4.01 *Availability of Lands*

A. Owner shall furnish the Site. Owner shall notify Contractor of any encumbrances or restrictions not of general application but specifically related to use of the Site with which Contractor must comply in performing the Work. Owner will obtain in a timely manner and pay for easements for permanent structures or permanent changes in existing facilities. If Contractor and Owner are unable to agree on entitlement to or on the amount or extent, if any, of any adjustment in the Contract Price or Contract Times, or both, as a result of any delay in Owner's furnishing the Site or a part thereof, Contractor may make a Claim therefor as provided in Paragraph 10.05.

B. Upon reasonable written request, Owner shall furnish Contractor with a current statement of record legal title and legal description of the lands upon which the Work is to be performed and Owner's interest therein as necessary for giving notice of or filing a mechanic's or construction lien against such lands in accordance with applicable Laws and Regulations.

C. Contractor shall provide for all additional lands and access thereto that may be required for temporary construction facilities or storage of materials and equipment.

4.02 *Subsurface and Physical Conditions*

A. *Reports and Drawings:* The Supplementary Conditions identify:

1. those reports known to Owner of explorations and tests of subsurface conditions at or contiguous to the Site; and

2. those drawings known to Owner of physical conditions relating to existing surface or subsurface structures at the Site (except Underground Facilities).

B. *Limited Reliance by Contractor on Technical Data Authorized:* Contractor may rely upon the accuracy of the "technical data" contained in such reports and drawings, but such reports and drawings are not Contract Documents. Such "technical data" is identified in the Supplementary Conditions. Except for such reliance on such "technical data," Contractor may not rely upon or make any claim against Owner or Engineer, or any of their officers, directors, members, partners, employees, agents, consultants, or subcontractors with respect to:

1. the completeness of such reports and drawings for Contractor's purposes, including, but not limited to, any aspects of the means, methods, techniques, sequences, and procedures of construction to be employed by Contractor, and safety precautions and programs incident thereto; or

2. other data, interpretations, opinions, and information contained in such reports or shown or indicated in such drawings; or

3. any Contractor interpretation of or conclusion drawn from any "technical data" or any such other data, interpretations, opinions, or information.

Copyright © 2007 National Society of Professional Engineers for EJCDC. All rights reserved.

4.03 *Differing Subsurface or Physical Conditions*

A. *Notice:* If Contractor believes that any subsurface or physical condition that is uncovered or revealed either:

1. is of such a nature as to establish that any "technical data" on which Contractor is entitled to rely as provided in Paragraph 4.02 is materially inaccurate; or

2. is of such a nature as to require a change in the Contract Documents; or

3. differs materially from that shown or indicated in the Contract Documents; or

4. is of an unusual nature, and differs materially from conditions ordinarily encountered and generally recognized as inherent in work of the character provided for in the Contract Documents;

then Contractor shall, promptly after becoming aware thereof and before further disturbing the subsurface or physical conditions or performing any Work in connection therewith (except in an emergency as required by Paragraph 6.16.A), notify Owner and Engineer in writing about such condition. Contractor shall not further disturb such condition or perform any Work in connection therewith (except as aforesaid) until receipt of written order to do so.

B. *Engineer's Review*: After receipt of written notice as required by Paragraph 4.03.A, Engineer will promptly review the pertinent condition, determine the necessity of Owner's obtaining additional exploration or tests with respect thereto, and advise Owner in writing (with a copy to Contractor) of Engineer's findings and conclusions.

C. *Possible Price and Times Adjustments:*

1. The Contract Price or the Contract Times, or both, will be equitably adjusted to the extent that the existence of such differing subsurface or physical condition causes an increase or decrease in Contractor's cost of, or time required for, performance of the Work; subject, however, to the following:

   a. such condition must meet any one or more of the categories described in Paragraph 4.03.A; and

   b. with respect to Work that is paid for on a unit price basis, any adjustment in Contract Price will be subject to the provisions of Paragraphs 9.07 and 11.03.

2. Contractor shall not be entitled to any adjustment in the Contract Price or Contract Times if:

   a. Contractor knew of the existence of such conditions at the time Contractor made a final commitment to Owner with respect to Contract Price and Contract Times by the submission of a Bid or becoming bound under a negotiated contract; or

   b. the existence of such condition could reasonably have been discovered or revealed as a result of any examination, investigation, exploration, test, or study of the Site and

Copyright © 2007 National Society of Professional Engineers for EJCDC. All rights reserved.

contiguous areas required by the Bidding Requirements or Contract Documents to be conducted by or for Contractor prior to Contractor's making such final commitment; or

c. Contractor failed to give the written notice as required by Paragraph 4.03.A.

3. If Owner and Contractor are unable to agree on entitlement to or on the amount or extent, if any, of any adjustment in the Contract Price or Contract Times, or both, a Claim may be made therefor as provided in Paragraph 10.05. However, neither Owner or Engineer, or any of their officers, directors, members, partners, employees, agents, consultants, or subcontractors shall be liable to Contractor for any claims, costs, losses, or damages (including but not limited to all fees and charges of engineers, architects, attorneys, and other professionals and all court or arbitration or other dispute resolution costs) sustained by Contractor on or in connection with any other project or anticipated project.

4.04 *Underground Facilities*

A. *Shown or Indicated:* The information and data shown or indicated in the Contract Documents with respect to existing Underground Facilities at or contiguous to the Site is based on information and data furnished to Owner or Engineer by the owners of such Underground Facilities, including Owner, or by others. Unless it is otherwise expressly provided in the Supplementary Conditions:

1. Owner and Engineer shall not be responsible for the accuracy or completeness of any such information or data provided by others; and

2. the cost of all of the following will be included in the Contract Price, and Contractor shall have full responsibility for:

a. reviewing and checking all such information and data;

b. locating all Underground Facilities shown or indicated in the Contract Documents;

c. coordination of the Work with the owners of such Underground Facilities, including Owner, during construction; and

d. the safety and protection of all such Underground Facilities and repairing any damage thereto resulting from the Work.

B. *Not Shown or Indicated:*

1. If an Underground Facility is uncovered or revealed at or contiguous to the Site which was not shown or indicated, or not shown or indicated with reasonable accuracy in the Contract Documents, Contractor shall, promptly after becoming aware thereof and before further disturbing conditions affected thereby or performing any Work in connection therewith (except in an emergency as required by Paragraph 6.16.A), identify the owner of such Underground Facility and give written notice to that owner and to Owner and Engineer. Engineer will promptly review the Underground Facility and determine the extent, if any, to which a change is required in the Contract Documents to reflect and document the

Copyright © 2007 National Society of Professional Engineers for EJCDC. All rights reserved.

consequences of the existence or location of the Underground Facility. During such time, Contractor shall be responsible for the safety and protection of such Underground Facility.

2. If Engineer concludes that a change in the Contract Documents is required, a Work Change Directive or a Change Order will be issued to reflect and document such consequences. An equitable adjustment shall be made in the Contract Price or Contract Times, or both, to the extent that they are attributable to the existence or location of any Underground Facility that was not shown or indicated or not shown or indicated with reasonable accuracy in the Contract Documents and that Contractor did not know of and could not reasonably have been expected to be aware of or to have anticipated. If Owner and Contractor are unable to agree on entitlement to or on the amount or extent, if any, of any such adjustment in Contract Price or Contract Times, Owner or Contractor may make a Claim therefor as provided in Paragraph 10.05.

4.05 *Reference Points*

A. Owner shall provide engineering surveys to establish reference points for construction which in Engineer's judgment are necessary to enable Contractor to proceed with the Work. Contractor shall be responsible for laying out the Work, shall protect and preserve the established reference points and property monuments, and shall make no changes or relocations without the prior written approval of Owner. Contractor shall report to Engineer whenever any reference point or property monument is lost or destroyed or requires relocation because of necessary changes in grades or locations, and shall be responsible for the accurate replacement or relocation of such reference points or property monuments by professionally qualified personnel.

4.06 *Hazardous Environmental Condition at Site*

A. *Reports and Drawings:* The Supplementary Conditions identify those reports and drawings known to Owner relating to Hazardous Environmental Conditions that have been identified at the Site.

B. *Limited Reliance by Contractor on Technical Data Authorized:* Contractor may rely upon the accuracy of the "technical data" contained in such reports and drawings, but such reports and drawings are not Contract Documents. Such "technical data" is identified in the Supplementary Conditions. Except for such reliance on such "technical data," Contractor may not rely upon or make any claim against Owner or Engineer, or any of their officers, directors, members, partners, employees, agents, consultants, or subcontractors with respect to:

1. the completeness of such reports and drawings for Contractor's purposes, including, but not limited to, any aspects of the means, methods, techniques, sequences and procedures of construction to be employed by Contractor and safety precautions and programs incident thereto; or

2. other data, interpretations, opinions and information contained in such reports or shown or indicated in such drawings; or

3. any Contractor interpretation of or conclusion drawn from any "technical data" or any such other data, interpretations, opinions or information.

Copyright © 2007 National Society of Professional Engineers for EJCDC. All rights reserved.

C. Contractor shall not be responsible for any Hazardous Environmental Condition uncovered or revealed at the Site which was not shown or indicated in Drawings or Specifications or identified in the Contract Documents to be within the scope of the Work. Contractor shall be responsible for a Hazardous Environmental Condition created with any materials brought to the Site by Contractor, Subcontractors, Suppliers, or anyone else for whom Contractor is responsible.

D. If Contractor encounters a Hazardous Environmental Condition or if Contractor or anyone for whom Contractor is responsible creates a Hazardous Environmental Condition, Contractor shall immediately: (i) secure or otherwise isolate such condition; (ii) stop all Work in connection with such condition and in any area affected thereby (except in an emergency as required by Paragraph 6.16.A); and (iii) notify Owner and Engineer (and promptly thereafter confirm such notice in writing). Owner shall promptly consult with Engineer concerning the necessity for Owner to retain a qualified expert to evaluate such condition or take corrective action, if any. Promptly after consulting with Engineer, Owner shall take such actions as are necessary to permit Owner to timely obtain required permits and provide Contractor the written notice required by Paragraph 4.06.E.

E. Contractor shall not be required to resume Work in connection with such condition or in any affected area until after Owner has obtained any required permits related thereto and delivered written notice to Contractor: (i) specifying that such condition and any affected area is or has been rendered safe for the resumption of Work; or (ii) specifying any special conditions under which such Work may be resumed safely. If Owner and Contractor cannot agree as to entitlement to or on the amount or extent, if any, of any adjustment in Contract Price or Contract Times, or both, as a result of such Work stoppage or such special conditions under which Work is agreed to be resumed by Contractor, either party may make a Claim therefor as provided in Paragraph 10.05.

F. If after receipt of such written notice Contractor does not agree to resume such Work based on a reasonable belief it is unsafe, or does not agree to resume such Work under such special conditions, then Owner may order the portion of the Work that is in the area affected by such condition to be deleted from the Work. If Owner and Contractor cannot agree as to entitlement to or on the amount or extent, if any, of an adjustment in Contract Price or Contract Times as a result of deleting such portion of the Work, then either party may make a Claim therefor as provided in Paragraph 10.05. Owner may have such deleted portion of the Work performed by Owner's own forces or others in accordance with Article 7.

G. To the fullest extent permitted by Laws and Regulations, Owner shall indemnify and hold harmless Contractor, Subcontractors, and Engineer, and the officers, directors, members, partners, employees, agents, consultants, and subcontractors of each and any of them from and against all claims, costs, losses, and damages (including but not limited to all fees and charges of engineers, architects, attorneys, and other professionals and all court or arbitration or other dispute resolution costs) arising out of or relating to a Hazardous Environmental Condition, provided that such Hazardous Environmental Condition: (i) was not shown or indicated in the Drawings or Specifications or identified in the Contract Documents to be included within the scope of the Work, and (ii) was not created by Contractor or by anyone for whom Contractor is responsible. Nothing in this Paragraph 4.06.G shall obligate Owner to indemnify any individual or entity from and against the consequences of that individual's or entity's own negligence.

Copyright © 2007 National Society of Professional Engineers for EJCDC. All rights reserved.

H. To the fullest extent permitted by Laws and Regulations, Contractor shall indemnify and hold harmless Owner and Engineer, and the officers, directors, members, partners, employees, agents, consultants, and subcontractors of each and any of them from and against all claims, costs, losses, and damages (including but not limited to all fees and charges of engineers, architects, attorneys, and other professionals and all court or arbitration or other dispute resolution costs) arising out of or relating to a Hazardous Environmental Condition created by Contractor or by anyone for whom Contractor is responsible. Nothing in this Paragraph 4.06.H shall obligate Contractor to indemnify any individual or entity from and against the consequences of that individual's or entity's own negligence.

I. The provisions of Paragraphs 4.02, 4.03, and 4.04 do not apply to a Hazardous Environmental Condition uncovered or revealed at the Site.

ARTICLE 5 – BONDS AND INSURANCE

5.01 *Performance, Payment, and Other Bonds*

A. Contractor shall furnish performance and payment bonds, each in an amount at least equal to the Contract Price as security for the faithful performance and payment of all of Contractor's obligations under the Contract Documents. These bonds shall remain in effect until one year after the date when final payment becomes due or until completion of the correction period specified in Paragraph 13.07, whichever is later, except as provided otherwise by Laws or Regulations or by the Contract Documents. Contractor shall also furnish such other bonds as are required by the Contract Documents.

B. All bonds shall be in the form prescribed by the Contract Documents except as provided otherwise by Laws or Regulations, and shall be executed by such sureties as are named in the list of "Companies Holding Certificates of Authority as Acceptable Sureties on Federal Bonds and as Acceptable Reinsuring Companies" as published in Circular 570 (amended) by the Financial Management Service, Surety Bond Branch, U.S. Department of the Treasury. All bonds signed by an agent or attorney-in-fact must be accompanied by a certified copy of that individual's authority to bind the surety. The evidence of authority shall show that it is effective on the date the agent or attorney-in-fact signed each bond.

C. If the surety on any bond furnished by Contractor is declared bankrupt or becomes insolvent or its right to do business is terminated in any state where any part of the Project is located or it ceases to meet the requirements of Paragraph 5.01.B, Contractor shall promptly notify Owner and Engineer and shall, within 20 days after the event giving rise to such notification, provide another bond and surety, both of which shall comply with the requirements of Paragraphs 5.01.B and 5.02.

5.02 *Licensed Sureties and Insurers*

A. All bonds and insurance required by the Contract Documents to be purchased and maintained by Owner or Contractor shall be obtained from surety or insurance companies that are duly licensed or authorized in the jurisdiction in which the Project is located to issue bonds or insurance policies for the limits and coverages so required. Such surety and insurance companies shall also

Copyright © 2007 National Society of Professional Engineers for EJCDC. All rights reserved.

meet such additional requirements and qualifications as may be provided in the Supplementary Conditions.

5.03 *Certificates of Insurance*

A. Contractor shall deliver to Owner, with copies to each additional insured and loss payee identified in the Supplementary Conditions, certificates of insurance (and other evidence of insurance requested by Owner or any other additional insured) which Contractor is required to purchase and maintain.

B. Owner shall deliver to Contractor, with copies to each additional insured and loss payee identified in the Supplementary Conditions, certificates of insurance (and other evidence of insurance requested by Contractor or any other additional insured) which Owner is required to purchase and maintain.

C. Failure of Owner to demand such certificates or other evidence of Contractor's full compliance with these insurance requirements or failure of Owner to identify a deficiency in compliance from the evidence provided shall not be construed as a waiver of Contractor's obligation to maintain such insurance.

D. Owner does not represent that insurance coverage and limits established in this Contract necessarily will be adequate to protect Contractor.

E. The insurance and insurance limits required herein shall not be deemed as a limitation on Contractor's liability under the indemnities granted to Owner in the Contract Documents.

5.04 *Contractor's Insurance*

A. Contractor shall purchase and maintain such insurance as is appropriate for the Work being performed and as will provide protection from claims set forth below which may arise out of or result from Contractor's performance of the Work and Contractor's other obligations under the Contract Documents, whether it is to be performed by Contractor, any Subcontractor or Supplier, or by anyone directly or indirectly employed by any of them to perform any of the Work, or by anyone for whose acts any of them may be liable:

1. claims under workers' compensation, disability benefits, and other similar employee benefit acts;

2. claims for damages because of bodily injury, occupational sickness or disease, or death of Contractor's employees;

3. claims for damages because of bodily injury, sickness or disease, or death of any person other than Contractor's employees;

4. claims for damages insured by reasonably available personal injury liability coverage which are sustained:

Copyright © 2007 National Society of Professional Engineers for EJCDC. All rights reserved.

a. by any person as a result of an offense directly or indirectly related to the employment of such person by Contractor, or

b. by any other person for any other reason;

5. claims for damages, other than to the Work itself, because of injury to or destruction of tangible property wherever located, including loss of use resulting therefrom; and

6. claims for damages because of bodily injury or death of any person or property damage arising out of the ownership, maintenance or use of any motor vehicle.

B. The policies of insurance required by this Paragraph 5.04 shall:

1. with respect to insurance required by Paragraphs 5.04.A.3 through 5.04.A.6 inclusive, be written on an occurrence basis, include as additional insureds (subject to any customary exclusion regarding professional liability) Owner and Engineer, and any other individuals or entities identified in the Supplementary Conditions, all of whom shall be listed as additional insureds, and include coverage for the respective officers, directors, members, partners, employees, agents, consultants, and subcontractors of each and any of all such additional insureds, and the insurance afforded to these additional insureds shall provide primary coverage for all claims covered thereby;

2. include at least the specific coverages and be written for not less than the limits of liability provided in the Supplementary Conditions or required by Laws or Regulations, whichever is greater;

3. include contractual liability insurance covering Contractor's indemnity obligations under Paragraphs 6.11 and 6.20;

4. contain a provision or endorsement that the coverage afforded will not be canceled, materially changed or renewal refused until at least 30 days prior written notice has been given to Owner and Contractor and to each other additional insured identified in the Supplementary Conditions to whom a certificate of insurance has been issued (and the certificates of insurance furnished by the Contractor pursuant to Paragraph 5.03 will so provide);

5. remain in effect at least until final payment and at all times thereafter when Contractor may be correcting, removing, or replacing defective Work in accordance with Paragraph 13.07; and

6. include completed operations coverage:

a. Such insurance shall remain in effect for two years after final payment.

b. Contractor shall furnish Owner and each other additional insured identified in the Supplementary Conditions, to whom a certificate of insurance has been issued, evidence satisfactory to Owner and any such additional insured of continuation of such insurance at final payment and one year thereafter.

Copyright © 2007 National Society of Professional Engineers for EJCDC. All rights reserved.

5.05 *Owner's Liability Insurance*

A. In addition to the insurance required to be provided by Contractor under Paragraph 5.04, Owner, at Owner's option, may purchase and maintain at Owner's expense Owner's own liability insurance as will protect Owner against claims which may arise from operations under the Contract Documents.

5.06 *Property Insurance*

A. Unless otherwise provided in the Supplementary Conditions, Owner shall purchase and maintain property insurance upon the Work at the Site in the amount of the full replacement cost thereof (subject to such deductible amounts as may be provided in the Supplementary Conditions or required by Laws and Regulations). This insurance shall:

1. include the interests of Owner, Contractor, Subcontractors, and Engineer, and any other individuals or entities identified in the Supplementary Conditions, and the officers, directors, members, partners, employees, agents, consultants, and subcontractors of each and any of them, each of whom is deemed to have an insurable interest and shall be listed as a loss payee;

2. be written on a Builder's Risk "all-risk" policy form that shall at least include insurance for physical loss or damage to the Work, temporary buildings, falsework, and materials and equipment in transit, and shall insure against at least the following perils or causes of loss: fire, lightning, extended coverage, theft, vandalism and malicious mischief, earthquake, collapse, debris removal, demolition occasioned by enforcement of Laws and Regulations, water damage (other than that caused by flood), and such other perils or causes of loss as may be specifically required by the Supplementary Conditions.

3. include expenses incurred in the repair or replacement of any insured property (including but not limited to fees and charges of engineers and architects);

4. cover materials and equipment stored at the Site or at another location that was agreed to in writing by Owner prior to being incorporated in the Work, provided that such materials and equipment have been included in an Application for Payment recommended by Engineer;

5. allow for partial utilization of the Work by Owner;

6. include testing and startup; and

7. be maintained in effect until final payment is made unless otherwise agreed to in writing by Owner, Contractor, and Engineer with 30 days written notice to each other loss payee to whom a certificate of insurance has been issued.

B. Owner shall purchase and maintain such equipment breakdown insurance or additional property insurance as may be required by the Supplementary Conditions or Laws and Regulations which will include the interests of Owner, Contractor, Subcontractors, and Engineer, and any other individuals or entities identified in the Supplementary Conditions, and the officers, directors,

Copyright © 2007 National Society of Professional Engineers for EJCDC. All rights reserved.

members, partners, employees, agents, consultants and subcontractors of each and any of them, each of whom is deemed to have an insurable interest and shall be listed as a loss payee.

C. All the policies of insurance (and the certificates or other evidence thereof) required to be purchased and maintained in accordance with this Paragraph 5.06 will contain a provision or endorsement that the coverage afforded will not be canceled or materially changed or renewal refused until at least 30 days prior written notice has been given to Owner and Contractor and to each other loss payee to whom a certificate of insurance has been issued and will contain waiver provisions in accordance with Paragraph 5.07.

D. Owner shall not be responsible for purchasing and maintaining any property insurance specified in this Paragraph 5.06 to protect the interests of Contractor, Subcontractors, or others in the Work to the extent of any deductible amounts that are identified in the Supplementary Conditions. The risk of loss within such identified deductible amount will be borne by Contractor, Subcontractors, or others suffering any such loss, and if any of them wishes property insurance coverage within the limits of such amounts, each may purchase and maintain it at the purchaser's own expense.

E. If Contractor requests in writing that other special insurance be included in the property insurance policies provided under this Paragraph 5.06, Owner shall, if possible, include such insurance, and the cost thereof will be charged to Contractor by appropriate Change Order. Prior to commencement of the Work at the Site, Owner shall in writing advise Contractor whether or not such other insurance has been procured by Owner.

5.07 *Waiver of Rights*

A. Owner and Contractor intend that all policies purchased in accordance with Paragraph 5.06 will protect Owner, Contractor, Subcontractors, and Engineer, and all other individuals or entities identified in the Supplementary Conditions as loss payees (and the officers, directors, members, partners, employees, agents, consultants, and subcontractors of each and any of them) in such policies and will provide primary coverage for all losses and damages caused by the perils or causes of loss covered thereby. All such policies shall contain provisions to the effect that in the event of payment of any loss or damage the insurers will have no rights of recovery against any of the insureds or loss payees thereunder. Owner and Contractor waive all rights against each other and their respective officers, directors, members, partners, employees, agents, consultants and subcontractors of each and any of them for all losses and damages caused by, arising out of or resulting from any of the perils or causes of loss covered by such policies and any other property insurance applicable to the Work; and, in addition, waive all such rights against Subcontractors and Engineer, and all other individuals or entities identified in the Supplementary Conditions as loss payees (and the officers, directors, members, partners, employees, agents, consultants, and subcontractors of each and any of them) under such policies for losses and damages so caused. None of the above waivers shall extend to the rights that any party making such waiver may have to the proceeds of insurance held by Owner as trustee or otherwise payable under any policy so issued.

B. Owner waives all rights against Contractor, Subcontractors, and Engineer, and the officers, directors, members, partners, employees, agents, consultants and subcontractors of each and any of them for:

Copyright © 2007 National Society of Professional Engineers for EJCDC. All rights reserved.

1. loss due to business interruption, loss of use, or other consequential loss extending beyond direct physical loss or damage to Owner's property or the Work caused by, arising out of, or resulting from fire or other perils whether or not insured by Owner; and

2. loss or damage to the completed Project or part thereof caused by, arising out of, or resulting from fire or other insured peril or cause of loss covered by any property insurance maintained on the completed Project or part thereof by Owner during partial utilization pursuant to Paragraph 14.05, after Substantial Completion pursuant to Paragraph 14.04, or after final payment pursuant to Paragraph 14.07.

C. Any insurance policy maintained by Owner covering any loss, damage or consequential loss referred to in Paragraph 5.07.B shall contain provisions to the effect that in the event of payment of any such loss, damage, or consequential loss, the insurers will have no rights of recovery against Contractor, Subcontractors, or Engineer, and the officers, directors, members, partners, employees, agents, consultants and subcontractors of each and any of them.

5.08 *Receipt and Application of Insurance Proceeds*

A. Any insured loss under the policies of insurance required by Paragraph 5.06 will be adjusted with Owner and made payable to Owner as fiduciary for the loss payees, as their interests may appear, subject to the requirements of any applicable mortgage clause and of Paragraph 5.08.B. Owner shall deposit in a separate account any money so received and shall distribute it in accordance with such agreement as the parties in interest may reach. If no other special agreement is reached, the damaged Work shall be repaired or replaced, the moneys so received applied on account thereof, and the Work and the cost thereof covered by an appropriate Change Order.

B. Owner as fiduciary shall have power to adjust and settle any loss with the insurers unless one of the parties in interest shall object in writing within 15 days after the occurrence of loss to Owner's exercise of this power. If such objection be made, Owner as fiduciary shall make settlement with the insurers in accordance with such agreement as the parties in interest may reach. If no such agreement among the parties in interest is reached, Owner as fiduciary shall adjust and settle the loss with the insurers and, if required in writing by any party in interest, Owner as fiduciary shall give bond for the proper performance of such duties.

5.09 *Acceptance of Bonds and Insurance; Option to Replace*

A. If either Owner or Contractor has any objection to the coverage afforded by or other provisions of the bonds or insurance required to be purchased and maintained by the other party in accordance with Article 5 on the basis of non-conformance with the Contract Documents, the objecting party shall so notify the other party in writing within 10 days after receipt of the certificates (or other evidence requested) required by Paragraph 2.01.B. Owner and Contractor shall each provide to the other such additional information in respect of insurance provided as the other may reasonably request. If either party does not purchase or maintain all of the bonds and insurance required of such party by the Contract Documents, such party shall notify the other party in writing of such failure to purchase prior to the start of the Work, or of such failure to maintain prior to any change in the required coverage. Without prejudice to any other right or remedy, the other party may elect to obtain equivalent bonds or insurance to protect such other party's

Copyright © 2007 National Society of Professional Engineers for EJCDC. All rights reserved.

interests at the expense of the party who was required to provide such coverage, and a Change Order shall be issued to adjust the Contract Price accordingly.

5.10 *Partial Utilization, Acknowledgment of Property Insurer*

A. If Owner finds it necessary to occupy or use a portion or portions of the Work prior to Substantial Completion of all the Work as provided in Paragraph 14.05, no such use or occupancy shall commence before the insurers providing the property insurance pursuant to Paragraph 5.06 have acknowledged notice thereof and in writing effected any changes in coverage necessitated thereby. The insurers providing the property insurance shall consent by endorsement on the policy or policies, but the property insurance shall not be canceled or permitted to lapse on account of any such partial use or occupancy.

ARTICLE 6 – CONTRACTOR'S RESPONSIBILITIES

6.01 *Supervision and Superintendence*

A. Contractor shall supervise, inspect, and direct the Work competently and efficiently, devoting such attention thereto and applying such skills and expertise as may be necessary to perform the Work in accordance with the Contract Documents. Contractor shall be solely responsible for the means, methods, techniques, sequences, and procedures of construction. Contractor shall not be responsible for the negligence of Owner or Engineer in the design or specification of a specific means, method, technique, sequence, or procedure of construction which is shown or indicated in and expressly required by the Contract Documents.

B. At all times during the progress of the Work, Contractor shall assign a competent resident superintendent who shall not be replaced without written notice to Owner and Engineer except under extraordinary circumstances.

6.02 *Labor; Working Hours*

A. Contractor shall provide competent, suitably qualified personnel to survey and lay out the Work and perform construction as required by the Contract Documents. Contractor shall at all times maintain good discipline and order at the Site.

B. Except as otherwise required for the safety or protection of persons or the Work or property at the Site or adjacent thereto, and except as otherwise stated in the Contract Documents, all Work at the Site shall be performed during regular working hours. Contractor will not permit the performance of Work on a Saturday, Sunday, or any legal holiday without Owner's written consent (which will not be unreasonably withheld) given after prior written notice to Engineer.

6.03 *Services, Materials, and Equipment*

A. Unless otherwise specified in the Contract Documents, Contractor shall provide and assume full responsibility for all services, materials, equipment, labor, transportation, construction equipment and machinery, tools, appliances, fuel, power, light, heat, telephone, water, sanitary facilities, temporary facilities, and all other facilities and incidentals necessary for the performance, testing, start-up, and completion of the Work.

Copyright © 2007 National Society of Professional Engineers for EJCDC. All rights reserved.

B. All materials and equipment incorporated into the Work shall be as specified or, if not specified, shall be of good quality and new, except as otherwise provided in the Contract Documents. All special warranties and guarantees required by the Specifications shall expressly run to the benefit of Owner. If required by Engineer, Contractor shall furnish satisfactory evidence (including reports of required tests) as to the source, kind, and quality of materials and equipment.

C. All materials and equipment shall be stored, applied, installed, connected, erected, protected, used, cleaned, and conditioned in accordance with instructions of the applicable Supplier, except as otherwise may be provided in the Contract Documents.

6.04 *Progress Schedule*

A. Contractor shall adhere to the Progress Schedule established in accordance with Paragraph 2.07 as it may be adjusted from time to time as provided below.

1. Contractor shall submit to Engineer for acceptance (to the extent indicated in Paragraph 2.07) proposed adjustments in the Progress Schedule that will not result in changing the Contract Times. Such adjustments will comply with any provisions of the General Requirements applicable thereto.

2. Proposed adjustments in the Progress Schedule that will change the Contract Times shall be submitted in accordance with the requirements of Article 12. Adjustments in Contract Times may only be made by a Change Order.

6.05 *Substitutes and "Or-Equals"*

A. Whenever an item of material or equipment is specified or described in the Contract Documents by using the name of a proprietary item or the name of a particular Supplier, the specification or description is intended to establish the type, function, appearance, and quality required. Unless the specification or description contains or is followed by words reading that no like, equivalent, or "or-equal" item or no substitution is permitted, other items of material or equipment or material or equipment of other Suppliers may be submitted to Engineer for review under the circumstances described below.

1. *"Or-Equal" Items:* If in Engineer's sole discretion an item of material or equipment proposed by Contractor is functionally equal to that named and sufficiently similar so that no change in related Work will be required, it may be considered by Engineer as an "or-equal" item, in which case review and approval of the proposed item may, in Engineer's sole discretion, be accomplished without compliance with some or all of the requirements for approval of proposed substitute items. For the purposes of this Paragraph 6.05.A.1, a proposed item of material or equipment will be considered functionally equal to an item so named if:

a. in the exercise of reasonable judgment Engineer determines that:

1) it is at least equal in materials of construction, quality, durability, appearance, strength, and design characteristics;

Copyright © 2007 National Society of Professional Engineers for EJCDC. All rights reserved.

2) it will reliably perform at least equally well the function and achieve the results imposed by the design concept of the completed Project as a functioning whole; and

3) it has a proven record of performance and availability of responsive service.

b. Contractor certifies that, if approved and incorporated into the Work:

1) there will be no increase in cost to the Owner or increase in Contract Times; and

2) it will conform substantially to the detailed requirements of the item named in the Contract Documents.

2. *Substitute Items:*

a. If in Engineer's sole discretion an item of material or equipment proposed by Contractor does not qualify as an "or-equal" item under Paragraph 6.05.A.1, it will be considered a proposed substitute item.

b. Contractor shall submit sufficient information as provided below to allow Engineer to determine if the item of material or equipment proposed is essentially equivalent to that named and an acceptable substitute therefor. Requests for review of proposed substitute items of material or equipment will not be accepted by Engineer from anyone other than Contractor.

c. The requirements for review by Engineer will be as set forth in Paragraph 6.05.A.2.d, as supplemented by the General Requirements, and as Engineer may decide is appropriate under the circumstances.

d. Contractor shall make written application to Engineer for review of a proposed substitute item of material or equipment that Contractor seeks to furnish or use. The application:

1) shall certify that the proposed substitute item will:

a) perform adequately the functions and achieve the results called for by the general design,

b) be similar in substance to that specified, and

c) be suited to the same use as that specified;

2) will state:

a) the extent, if any, to which the use of the proposed substitute item will prejudice Contractor's achievement of Substantial Completion on time,

b) whether use of the proposed substitute item in the Work will require a change in any of the Contract Documents (or in the provisions of any other direct contract with Owner for other work on the Project) to adapt the design to the proposed substitute item, and

Copyright © 2007 National Society of Professional Engineers for EJCDC. All rights reserved.

c) whether incorporation or use of the proposed substitute item in connection with the Work is subject to payment of any license fee or royalty;

3) will identify:

a) all variations of the proposed substitute item from that specified, and

b) available engineering, sales, maintenance, repair, and replacement services; and

4) shall contain an itemized estimate of all costs or credits that will result directly or indirectly from use of such substitute item, including costs of redesign and claims of other contractors affected by any resulting change.

B. *Substitute Construction Methods or Procedures:* If a specific means, method, technique, sequence, or procedure of construction is expressly required by the Contract Documents, Contractor may furnish or utilize a substitute means, method, technique, sequence, or procedure of construction approved by Engineer. Contractor shall submit sufficient information to allow Engineer, in Engineer's sole discretion, to determine that the substitute proposed is equivalent to that expressly called for by the Contract Documents. The requirements for review by Engineer will be similar to those provided in Paragraph 6.05.A.2.

C. *Engineer's Evaluation:* Engineer will be allowed a reasonable time within which to evaluate each proposal or submittal made pursuant to Paragraphs 6.05.A and 6.05.B. Engineer may require Contractor to furnish additional data about the proposed substitute item. Engineer will be the sole judge of acceptability. No "or equal" or substitute will be ordered, installed or utilized until Engineer's review is complete, which will be evidenced by a Change Order in the case of a substitute and an approved Shop Drawing for an "or equal." Engineer will advise Contractor in writing of any negative determination.

D. *Special Guarantee:* Owner may require Contractor to furnish at Contractor's expense a special performance guarantee or other surety with respect to any substitute.

E. *Engineer's Cost Reimbursement*: Engineer will record Engineer's costs in evaluating a substitute proposed or submitted by Contractor pursuant to Paragraphs 6.05.A.2 and 6.05.B. Whether or not Engineer approves a substitute so proposed or submitted by Contractor, Contractor shall reimburse Owner for the reasonable charges of Engineer for evaluating each such proposed substitute. Contractor shall also reimburse Owner for the reasonable charges of Engineer for making changes in the Contract Documents (or in the provisions of any other direct contract with Owner) resulting from the acceptance of each proposed substitute.

F. *Contractor's Expense*: Contractor shall provide all data in support of any proposed substitute or "or-equal" at Contractor's expense.

6.06 *Concerning Subcontractors, Suppliers, and Others*

A. Contractor shall not employ any Subcontractor, Supplier, or other individual or entity (including those acceptable to Owner as indicated in Paragraph 6.06.B), whether initially or as a replacement, against whom Owner may have reasonable objection. Contractor shall not be

Copyright © 2007 National Society of Professional Engineers for EJCDC. All rights reserved.

required to employ any Subcontractor, Supplier, or other individual or entity to furnish or perform any of the Work against whom Contractor has reasonable objection.

B. If the Supplementary Conditions require the identity of certain Subcontractors, Suppliers, or other individuals or entities to be submitted to Owner in advance for acceptance by Owner by a specified date prior to the Effective Date of the Agreement, and if Contractor has submitted a list thereof in accordance with the Supplementary Conditions, Owner's acceptance (either in writing or by failing to make written objection thereto by the date indicated for acceptance or objection in the Bidding Documents or the Contract Documents) of any such Subcontractor, Supplier, or other individual or entity so identified may be revoked on the basis of reasonable objection after due investigation. Contractor shall submit an acceptable replacement for the rejected Subcontractor, Supplier, or other individual or entity, and the Contract Price will be adjusted by the difference in the cost occasioned by such replacement, and an appropriate Change Order will be issued. No acceptance by Owner of any such Subcontractor, Supplier, or other individual or entity, whether initially or as a replacement, shall constitute a waiver of any right of Owner or Engineer to reject defective Work.

C. Contractor shall be fully responsible to Owner and Engineer for all acts and omissions of the Subcontractors, Suppliers, and other individuals or entities performing or furnishing any of the Work just as Contractor is responsible for Contractor's own acts and omissions. Nothing in the Contract Documents:

1. shall create for the benefit of any such Subcontractor, Supplier, or other individual or entity any contractual relationship between Owner or Engineer and any such Subcontractor, Supplier or other individual or entity; nor

2. shall create any obligation on the part of Owner or Engineer to pay or to see to the payment of any moneys due any such Subcontractor, Supplier, or other individual or entity except as may otherwise be required by Laws and Regulations.

D. Contractor shall be solely responsible for scheduling and coordinating the Work of Subcontractors, Suppliers, and other individuals or entities performing or furnishing any of the Work under a direct or indirect contract with Contractor.

E. Contractor shall require all Subcontractors, Suppliers, and such other individuals or entities performing or furnishing any of the Work to communicate with Engineer through Contractor.

F. The divisions and sections of the Specifications and the identifications of any Drawings shall not control Contractor in dividing the Work among Subcontractors or Suppliers or delineating the Work to be performed by any specific trade.

G. All Work performed for Contractor by a Subcontractor or Supplier will be pursuant to an appropriate agreement between Contractor and the Subcontractor or Supplier which specifically binds the Subcontractor or Supplier to the applicable terms and conditions of the Contract Documents for the benefit of Owner and Engineer. Whenever any such agreement is with a Subcontractor or Supplier who is listed as a loss payee on the property insurance provided in Paragraph 5.06, the agreement between the Contractor and the Subcontractor or Supplier will contain provisions whereby the Subcontractor or Supplier waives all rights against Owner,

Copyright © 2007 National Society of Professional Engineers for EJCDC. All rights reserved.

Contractor, Engineer, and all other individuals or entities identified in the Supplementary Conditions to be listed as insureds or loss payees (and the officers, directors, members, partners, employees, agents, consultants, and subcontractors of each and any of them) for all losses and damages caused by, arising out of, relating to, or resulting from any of the perils or causes of loss covered by such policies and any other property insurance applicable to the Work. If the insurers on any such policies require separate waiver forms to be signed by any Subcontractor or Supplier, Contractor will obtain the same.

6.07 *Patent Fees and Royalties*

A. Contractor shall pay all license fees and royalties and assume all costs incident to the use in the performance of the Work or the incorporation in the Work of any invention, design, process, product, or device which is the subject of patent rights or copyrights held by others. If a particular invention, design, process, product, or device is specified in the Contract Documents for use in the performance of the Work and if, to the actual knowledge of Owner or Engineer, its use is subject to patent rights or copyrights calling for the payment of any license fee or royalty to others, the existence of such rights shall be disclosed by Owner in the Contract Documents.

B. To the fullest extent permitted by Laws and Regulations, Owner shall indemnify and hold harmless Contractor, and its officers, directors, members, partners, employees, agents, consultants, and subcontractors from and against all claims, costs, losses, and damages (including but not limited to all fees and charges of engineers, architects, attorneys, and other professionals, and all court or arbitration or other dispute resolution costs) arising out of or relating to any infringement of patent rights or copyrights incident to the use in the performance of the Work or resulting from the incorporation in the Work of any invention, design, process, product, or device specified in the Contract Documents, but not identified as being subject to payment of any license fee or royalty to others required by patent rights or copyrights.

C. To the fullest extent permitted by Laws and Regulations, Contractor shall indemnify and hold harmless Owner and Engineer, and the officers, directors, members, partners, employees, agents, consultants and subcontractors of each and any of them from and against all claims, costs, losses, and damages (including but not limited to all fees and charges of engineers, architects, attorneys, and other professionals and all court or arbitration or other dispute resolution costs) arising out of or relating to any infringement of patent rights or copyrights incident to the use in the performance of the Work or resulting from the incorporation in the Work of any invention, design, process, product, or device not specified in the Contract Documents.

6.08 *Permits*

A. Unless otherwise provided in the Supplementary Conditions, Contractor shall obtain and pay for all construction permits and licenses. Owner shall assist Contractor, when necessary, in obtaining such permits and licenses. Contractor shall pay all governmental charges and inspection fees necessary for the prosecution of the Work which are applicable at the time of opening of Bids, or, if there are no Bids, on the Effective Date of the Agreement. Owner shall pay all charges of utility owners for connections for providing permanent service to the Work.

Copyright © 2007 National Society of Professional Engineers for EJCDC. All rights reserved.

6.09 *Laws and Regulations*

A. Contractor shall give all notices required by and shall comply with all Laws and Regulations applicable to the performance of the Work. Except where otherwise expressly required by applicable Laws and Regulations, neither Owner nor Engineer shall be responsible for monitoring Contractor's compliance with any Laws or Regulations.

B. If Contractor performs any Work knowing or having reason to know that it is contrary to Laws or Regulations, Contractor shall bear all claims, costs, losses, and damages (including but not limited to all fees and charges of engineers, architects, attorneys, and other professionals and all court or arbitration or other dispute resolution costs) arising out of or relating to such Work. However, it shall not be Contractor's responsibility to make certain that the Specifications and Drawings are in accordance with Laws and Regulations, but this shall not relieve Contractor of Contractor's obligations under Paragraph 3.03.

C. Changes in Laws or Regulations not known at the time of opening of Bids (or, on the Effective Date of the Agreement if there were no Bids) having an effect on the cost or time of performance of the Work shall be the subject of an adjustment in Contract Price or Contract Times. If Owner and Contractor are unable to agree on entitlement to or on the amount or extent, if any, of any such adjustment, a Claim may be made therefor as provided in Paragraph 10.05.

6.10 *Taxes*

A. Contractor shall pay all sales, consumer, use, and other similar taxes required to be paid by Contractor in accordance with the Laws and Regulations of the place of the Project which are applicable during the performance of the Work.

6.11 *Use of Site and Other Areas*

A. *Limitation on Use of Site and Other Areas:*

1. Contractor shall confine construction equipment, the storage of materials and equipment, and the operations of workers to the Site and other areas permitted by Laws and Regulations, and shall not unreasonably encumber the Site and other areas with construction equipment or other materials or equipment. Contractor shall assume full responsibility for any damage to any such land or area, or to the owner or occupant thereof, or of any adjacent land or areas resulting from the performance of the Work.

2. Should any claim be made by any such owner or occupant because of the performance of the Work, Contractor shall promptly settle with such other party by negotiation or otherwise resolve the claim by arbitration or other dispute resolution proceeding or at law.

3. To the fullest extent permitted by Laws and Regulations, Contractor shall indemnify and hold harmless Owner and Engineer, and the officers, directors, members, partners, employees, agents, consultants and subcontractors of each and any of them from and against all claims, costs, losses, and damages (including but not limited to all fees and charges of engineers, architects, attorneys, and other professionals and all court or arbitration or other dispute resolution costs) arising out of or relating to any claim or action, legal or equitable, brought

Copyright © 2007 National Society of Professional Engineers for EJCDC. All rights reserved.

by any such owner or occupant against Owner, Engineer, or any other party indemnified hereunder to the extent caused by or based upon Contractor's performance of the Work.

B. *Removal of Debris During Performance of the Work:* During the progress of the Work Contractor shall keep the Site and other areas free from accumulations of waste materials, rubbish, and other debris. Removal and disposal of such waste materials, rubbish, and other debris shall conform to applicable Laws and Regulations.

C. *Cleaning:* Prior to Substantial Completion of the Work Contractor shall clean the Site and the Work and make it ready for utilization by Owner. At the completion of the Work Contractor shall remove from the Site all tools, appliances, construction equipment and machinery, and surplus materials and shall restore to original condition all property not designated for alteration by the Contract Documents.

D. *Loading Structures:* Contractor shall not load nor permit any part of any structure to be loaded in any manner that will endanger the structure, nor shall Contractor subject any part of the Work or adjacent property to stresses or pressures that will endanger it.

6.12 *Record Documents*

A. Contractor shall maintain in a safe place at the Site one record copy of all Drawings, Specifications, Addenda, Change Orders, Work Change Directives, Field Orders, and written interpretations and clarifications in good order and annotated to show changes made during construction. These record documents together with all approved Samples and a counterpart of all approved Shop Drawings will be available to Engineer for reference. Upon completion of the Work, these record documents, Samples, and Shop Drawings will be delivered to Engineer for Owner.

6.13 *Safety and Protection*

A. Contractor shall be solely responsible for initiating, maintaining and supervising all safety precautions and programs in connection with the Work. Such responsibility does not relieve Subcontractors of their responsibility for the safety of persons or property in the performance of their work, nor for compliance with applicable safety Laws and Regulations. Contractor shall take all necessary precautions for the safety of, and shall provide the necessary protection to prevent damage, injury or loss to:

1. all persons on the Site or who may be affected by the Work;

2. all the Work and materials and equipment to be incorporated therein, whether in storage on or off the Site; and

3. other property at the Site or adjacent thereto, including trees, shrubs, lawns, walks, pavements, roadways, structures, utilities, and Underground Facilities not designated for removal, relocation, or replacement in the course of construction.

B. Contractor shall comply with all applicable Laws and Regulations relating to the safety of persons or property, or to the protection of persons or property from damage, injury, or loss; and

Copyright © 2007 National Society of Professional Engineers for EJCDC. All rights reserved.

shall erect and maintain all necessary safeguards for such safety and protection. Contractor shall notify owners of adjacent property and of Underground Facilities and other utility owners when prosecution of the Work may affect them, and shall cooperate with them in the protection, removal, relocation, and replacement of their property.

C. Contractor shall comply with the applicable requirements of Owner's safety programs, if any. The Supplementary Conditions identify any Owner's safety programs that are applicable to the Work.

D. Contractor shall inform Owner and Engineer of the specific requirements of Contractor's safety program with which Owner's and Engineer's employees and representatives must comply while at the Site.

E. All damage, injury, or loss to any property referred to in Paragraph 6.13.A.2 or 6.13.A.3 caused, directly or indirectly, in whole or in part, by Contractor, any Subcontractor, Supplier, or any other individual or entity directly or indirectly employed by any of them to perform any of the Work, or anyone for whose acts any of them may be liable, shall be remedied by Contractor (except damage or loss attributable to the fault of Drawings or Specifications or to the acts or omissions of Owner or Engineer or anyone employed by any of them, or anyone for whose acts any of them may be liable, and not attributable, directly or indirectly, in whole or in part, to the fault or negligence of Contractor or any Subcontractor, Supplier, or other individual or entity directly or indirectly employed by any of them).

F. Contractor's duties and responsibilities for safety and for protection of the Work shall continue until such time as all the Work is completed and Engineer has issued a notice to Owner and Contractor in accordance with Paragraph 14.07.B that the Work is acceptable (except as otherwise expressly provided in connection with Substantial Completion).

6.14 *Safety Representative*

A. Contractor shall designate a qualified and experienced safety representative at the Site whose duties and responsibilities shall be the prevention of accidents and the maintaining and supervising of safety precautions and programs.

6.15 *Hazard Communication Programs*

A. Contractor shall be responsible for coordinating any exchange of material safety data sheets or other hazard communication information required to be made available to or exchanged between or among employers at the Site in accordance with Laws or Regulations.

6.16 *Emergencies*

A. In emergencies affecting the safety or protection of persons or the Work or property at the Site or adjacent thereto, Contractor is obligated to act to prevent threatened damage, injury, or loss. Contractor shall give Engineer prompt written notice if Contractor believes that any significant changes in the Work or variations from the Contract Documents have been caused thereby or are required as a result thereof. If Engineer determines that a change in the Contract Documents is

Copyright © 2007 National Society of Professional Engineers for EJCDC. All rights reserved.

required because of the action taken by Contractor in response to such an emergency, a Work Change Directive or Change Order will be issued.

6.17 *Shop Drawings and Samples*

A. Contractor shall submit Shop Drawings and Samples to Engineer for review and approval in accordance with the accepted Schedule of Submittals (as required by Paragraph 2.07). Each submittal will be identified as Engineer may require.

1. *Shop Drawings:*

a. Submit number of copies specified in the General Requirements.

b. Data shown on the Shop Drawings will be complete with respect to quantities, dimensions, specified performance and design criteria, materials, and similar data to show Engineer the services, materials, and equipment Contractor proposes to provide and to enable Engineer to review the information for the limited purposes required by Paragraph 6.17.D.

2. *Samples:*

a. Submit number of Samples specified in the Specifications.

b. Clearly identify each Sample as to material, Supplier, pertinent data such as catalog numbers, the use for which intended and other data as Engineer may require to enable Engineer to review the submittal for the limited purposes required by Paragraph 6.17.D.

B. Where a Shop Drawing or Sample is required by the Contract Documents or the Schedule of Submittals, any related Work performed prior to Engineer's review and approval of the pertinent submittal will be at the sole expense and responsibility of Contractor.

C. *Submittal Procedures:*

1. Before submitting each Shop Drawing or Sample, Contractor shall have:

a. reviewed and coordinated each Shop Drawing or Sample with other Shop Drawings and Samples and with the requirements of the Work and the Contract Documents;

b. determined and verified all field measurements, quantities, dimensions, specified performance and design criteria, installation requirements, materials, catalog numbers, and similar information with respect thereto;

c. determined and verified the suitability of all materials offered with respect to the indicated application, fabrication, shipping, handling, storage, assembly, and installation pertaining to the performance of the Work; and

d. determined and verified all information relative to Contractor's responsibilities for means, methods, techniques, sequences, and procedures of construction, and safety precautions and programs incident thereto.

Copyright © 2007 National Society of Professional Engineers for EJCDC. All rights reserved.

2. Each submittal shall bear a stamp or specific written certification that Contractor has satisfied Contractor's obligations under the Contract Documents with respect to Contractor's review and approval of that submittal.

3. With each submittal, Contractor shall give Engineer specific written notice of any variations that the Shop Drawing or Sample may have from the requirements of the Contract Documents. This notice shall be both a written communication separate from the Shop Drawings or Sample submittal; and, in addition, by a specific notation made on each Shop Drawing or Sample submitted to Engineer for review and approval of each such variation.

D. *Engineer's Review:*

1. Engineer will provide timely review of Shop Drawings and Samples in accordance with the Schedule of Submittals acceptable to Engineer. Engineer's review and approval will be only to determine if the items covered by the submittals will, after installation or incorporation in the Work, conform to the information given in the Contract Documents and be compatible with the design concept of the completed Project as a functioning whole as indicated by the Contract Documents.

2. Engineer's review and approval will not extend to means, methods, techniques, sequences, or procedures of construction (except where a particular means, method, technique, sequence, or procedure of construction is specifically and expressly called for by the Contract Documents) or to safety precautions or programs incident thereto. The review and approval of a separate item as such will not indicate approval of the assembly in which the item functions.

3. Engineer's review and approval shall not relieve Contractor from responsibility for any variation from the requirements of the Contract Documents unless Contractor has complied with the requirements of Paragraph 6.17.C.3 and Engineer has given written approval of each such variation by specific written notation thereof incorporated in or accompanying the Shop Drawing or Sample. Engineer's review and approval shall not relieve Contractor from responsibility for complying with the requirements of Paragraph 6.17.C.1.

E. *Resubmittal Procedures:*

1. Contractor shall make corrections required by Engineer and shall return the required number of corrected copies of Shop Drawings and submit, as required, new Samples for review and approval. Contractor shall direct specific attention in writing to revisions other than the corrections called for by Engineer on previous submittals.

6.18 *Continuing the Work*

A. Contractor shall carry on the Work and adhere to the Progress Schedule during all disputes or disagreements with Owner. No Work shall be delayed or postponed pending resolution of any disputes or disagreements, except as permitted by Paragraph 15.04 or as Owner and Contractor may otherwise agree in writing.

Copyright © 2007 National Society of Professional Engineers for EJCDC. All rights reserved.

6.19 *Contractor's General Warranty and Guarantee*

A. Contractor warrants and guarantees to Owner that all Work will be in accordance with the Contract Documents and will not be defective. Engineer and its officers, directors, members, partners, employees, agents, consultants, and subcontractors shall be entitled to rely on representation of Contractor's warranty and guarantee.

B. Contractor's warranty and guarantee hereunder excludes defects or damage caused by:

1. abuse, modification, or improper maintenance or operation by persons other than Contractor, Subcontractors, Suppliers, or any other individual or entity for whom Contractor is responsible; or

2. normal wear and tear under normal usage.

C. Contractor's obligation to perform and complete the Work in accordance with the Contract Documents shall be absolute. None of the following will constitute an acceptance of Work that is not in accordance with the Contract Documents or a release of Contractor's obligation to perform the Work in accordance with the Contract Documents:

1. observations by Engineer;

2. recommendation by Engineer or payment by Owner of any progress or final payment;

3. the issuance of a certificate of Substantial Completion by Engineer or any payment related thereto by Owner;

4. use or occupancy of the Work or any part thereof by Owner;

5. any review and approval of a Shop Drawing or Sample submittal or the issuance of a notice of acceptability by Engineer;

6. any inspection, test, or approval by others; or

7. any correction of defective Work by Owner.

6.20 *Indemnification*

A. To the fullest extent permitted by Laws and Regulations, Contractor shall indemnify and hold harmless Owner and Engineer, and the officers, directors, members, partners, employees, agents, consultants and subcontractors of each and any of them from and against all claims, costs, losses, and damages (including but not limited to all fees and charges of engineers, architects, attorneys, and other professionals and all court or arbitration or other dispute resolution costs) arising out of or relating to the performance of the Work, provided that any such claim, cost, loss, or damage is attributable to bodily injury, sickness, disease, or death, or to injury to or destruction of tangible property (other than the Work itself), including the loss of use resulting therefrom but only to the extent caused by any negligent act or omission of Contractor, any Subcontractor, any Supplier, or any individual or entity directly or indirectly employed by any of them to perform any of the Work or anyone for whose acts any of them may be liable .

Copyright © 2007 National Society of Professional Engineers for EJCDC. All rights reserved.

B. In any and all claims against Owner or Engineer or any of their officers, directors, members, partners, employees, agents, consultants, or subcontractors by any employee (or the survivor or personal representative of such employee) of Contractor, any Subcontractor, any Supplier, or any individual or entity directly or indirectly employed by any of them to perform any of the Work, or anyone for whose acts any of them may be liable, the indemnification obligation under Paragraph 6.20.A shall not be limited in any way by any limitation on the amount or type of damages, compensation, or benefits payable by or for Contractor or any such Subcontractor, Supplier, or other individual or entity under workers' compensation acts, disability benefit acts, or other employee benefit acts.

C. The indemnification obligations of Contractor under Paragraph 6.20.A shall not extend to the liability of Engineer and Engineer's officers, directors, members, partners, employees, agents, consultants and subcontractors arising out of:

1. the preparation or approval of, or the failure to prepare or approve maps, Drawings, opinions, reports, surveys, Change Orders, designs, or Specifications; or

2. giving directions or instructions, or failing to give them, if that is the primary cause of the injury or damage.

6.21 *Delegation of Professional Design Services*

A. Contractor will not be required to provide professional design services unless such services are specifically required by the Contract Documents for a portion of the Work or unless such services are required to carry out Contractor's responsibilities for construction means, methods, techniques, sequences and procedures. Contractor shall not be required to provide professional services in violation of applicable law.

B. If professional design services or certifications by a design professional related to systems, materials or equipment are specifically required of Contractor by the Contract Documents, Owner and Engineer will specify all performance and design criteria that such services must satisfy. Contractor shall cause such services or certifications to be provided by a properly licensed professional, whose signature and seal shall appear on all drawings, calculations, specifications, certifications, Shop Drawings and other submittals prepared by such professional. Shop Drawings and other submittals related to the Work designed or certified by such professional, if prepared by others, shall bear such professional's written approval when submitted to Engineer.

C. Owner and Engineer shall be entitled to rely upon the adequacy, accuracy and completeness of the services, certifications or approvals performed by such design professionals, provided Owner and Engineer have specified to Contractor all performance and design criteria that such services must satisfy.

D. Pursuant to this Paragraph 6.21, Engineer's review and approval of design calculations and design drawings will be only for the limited purpose of checking for conformance with performance and design criteria given and the design concept expressed in the Contract Documents. Engineer's review and approval of Shop Drawings and other submittals (except design calculations and design drawings) will be only for the purpose stated in Paragraph 6.17.D.1.

Copyright © 2007 National Society of Professional Engineers for EJCDC. All rights reserved.

E. Contractor shall not be responsible for the adequacy of the performance or design criteria required by the Contract Documents.

ARTICLE 7 – OTHER WORK AT THE SITE

7.01 *Related Work at Site*

A. Owner may perform other work related to the Project at the Site with Owner's employees, or through other direct contracts therefor, or have other work performed by utility owners. If such other work is not noted in the Contract Documents, then:

1. written notice thereof will be given to Contractor prior to starting any such other work; and

2. if Owner and Contractor are unable to agree on entitlement to or on the amount or extent, if any, of any adjustment in the Contract Price or Contract Times that should be allowed as a result of such other work, a Claim may be made therefor as provided in Paragraph 10.05.

B. Contractor shall afford each other contractor who is a party to such a direct contract, each utility owner, and Owner, if Owner is performing other work with Owner's employees, proper and safe access to the Site, provide a reasonable opportunity for the introduction and storage of materials and equipment and the execution of such other work, and properly coordinate the Work with theirs. Contractor shall do all cutting, fitting, and patching of the Work that may be required to properly connect or otherwise make its several parts come together and properly integrate with such other work. Contractor shall not endanger any work of others by cutting, excavating, or otherwise altering such work; provided, however, that Contractor may cut or alter others' work with the written consent of Engineer and the others whose work will be affected. The duties and responsibilities of Contractor under this Paragraph are for the benefit of such utility owners and other contractors to the extent that there are comparable provisions for the benefit of Contractor in said direct contracts between Owner and such utility owners and other contractors.

C. If the proper execution or results of any part of Contractor's Work depends upon work performed by others under this Article 7, Contractor shall inspect such other work and promptly report to Engineer in writing any delays, defects, or deficiencies in such other work that render it unavailable or unsuitable for the proper execution and results of Contractor's Work. Contractor's failure to so report will constitute an acceptance of such other work as fit and proper for integration with Contractor's Work except for latent defects and deficiencies in such other work.

7.02 *Coordination*

A. If Owner intends to contract with others for the performance of other work on the Project at the Site, the following will be set forth in Supplementary Conditions:

1. the individual or entity who will have authority and responsibility for coordination of the activities among the various contractors will be identified;

2. the specific matters to be covered by such authority and responsibility will be itemized; and

3. the extent of such authority and responsibilities will be provided.

Copyright © 2007 National Society of Professional Engineers for EJCDC. All rights reserved.

B. Unless otherwise provided in the Supplementary Conditions, Owner shall have sole authority and responsibility for such coordination.

7.03 *Legal Relationships*

A. Paragraphs 7.01.A and 7.02 are not applicable for utilities not under the control of Owner.

B. Each other direct contract of Owner under Paragraph 7.01.A shall provide that the other contractor is liable to Owner and Contractor for the reasonable direct delay and disruption costs incurred by Contractor as a result of the other contractor's wrongful actions or inactions.

C. Contractor shall be liable to Owner and any other contractor under direct contract to Owner for the reasonable direct delay and disruption costs incurred by such other contractor as a result of Contractor's wrongful action or inactions.

ARTICLE 8 – OWNER'S RESPONSIBILITIES

8.01 *Communications to Contractor*

A. Except as otherwise provided in these General Conditions, Owner shall issue all communications to Contractor through Engineer.

8.02 *Replacement of Engineer*

A. In case of termination of the employment of Engineer, Owner shall appoint an engineer to whom Contractor makes no reasonable objection, whose status under the Contract Documents shall be that of the former Engineer.

8.03 *Furnish Data*

A. Owner shall promptly furnish the data required of Owner under the Contract Documents.

8.04 *Pay When Due*

A. Owner shall make payments to Contractor when they are due as provided in Paragraphs 14.02.C and 14.07.C.

8.05 *Lands and Easements; Reports and Tests*

A. Owner's duties with respect to providing lands and easements and providing engineering surveys to establish reference points are set forth in Paragraphs 4.01 and 4.05. Paragraph 4.02 refers to Owner's identifying and making available to Contractor copies of reports of explorations and tests of subsurface conditions and drawings of physical conditions relating to existing surface or subsurface structures at the Site.

8.06 *Insurance*

A. Owner's responsibilities, if any, with respect to purchasing and maintaining liability and property insurance are set forth in Article 5.

Copyright © 2007 National Society of Professional Engineers for EJCDC. All rights reserved.

8.07 *Change Orders*

A. Owner is obligated to execute Change Orders as indicated in Paragraph 10.03.

8.08 *Inspections, Tests, and Approvals*

A. Owner's responsibility with respect to certain inspections, tests, and approvals is set forth in Paragraph 13.03.B.

8.09 *Limitations on Owner's Responsibilities*

A. The Owner shall not supervise, direct, or have control or authority over, nor be responsible for, Contractor's means, methods, techniques, sequences, or procedures of construction, or the safety precautions and programs incident thereto, or for any failure of Contractor to comply with Laws and Regulations applicable to the performance of the Work. Owner will not be responsible for Contractor's failure to perform the Work in accordance with the Contract Documents.

8.10 *Undisclosed Hazardous Environmental Condition*

A. Owner's responsibility in respect to an undisclosed Hazardous Environmental Condition is set forth in Paragraph 4.06.

8.11 *Evidence of Financial Arrangements*

A. Upon request of Contractor, Owner shall furnish Contractor reasonable evidence that financial arrangements have been made to satisfy Owner's obligations under the Contract Documents.

8.12 *Compliance with Safety Program*

A. While at the Site, Owner's employees and representatives shall comply with the specific applicable requirements of Contractor's safety programs of which Owner has been informed pursuant to Paragraph 6.13.D.

ARTICLE 9 – ENGINEER'S STATUS DURING CONSTRUCTION

9.01 *Owner's Representative*

A. Engineer will be Owner's representative during the construction period. The duties and responsibilities and the limitations of authority of Engineer as Owner's representative during construction are set forth in the Contract Documents.

9.02 *Visits to Site*

A. Engineer will make visits to the Site at intervals appropriate to the various stages of construction as Engineer deems necessary in order to observe as an experienced and qualified design professional the progress that has been made and the quality of the various aspects of Contractor's executed Work. Based on information obtained during such visits and observations, Engineer, for the benefit of Owner, will determine, in general, if the Work is proceeding in accordance with the Contract Documents. Engineer will not be required to make exhaustive or

Copyright © 2007 National Society of Professional Engineers for EJCDC. All rights reserved.

continuous inspections on the Site to check the quality or quantity of the Work. Engineer's efforts will be directed toward providing for Owner a greater degree of confidence that the completed Work will conform generally to the Contract Documents. On the basis of such visits and observations, Engineer will keep Owner informed of the progress of the Work and will endeavor to guard Owner against defective Work.

B. Engineer's visits and observations are subject to all the limitations on Engineer's authority and responsibility set forth in Paragraph 9.09. Particularly, but without limitation, during or as a result of Engineer's visits or observations of Contractor's Work, Engineer will not supervise, direct, control, or have authority over or be responsible for Contractor's means, methods, techniques, sequences, or procedures of construction, or the safety precautions and programs incident thereto, or for any failure of Contractor to comply with Laws and Regulations applicable to the performance of the Work.

9.03 *Project Representative*

A. If Owner and Engineer agree, Engineer will furnish a Resident Project Representative to assist Engineer in providing more extensive observation of the Work. The authority and responsibilities of any such Resident Project Representative and assistants will be as provided in the Supplementary Conditions, and limitations on the responsibilities thereof will be as provided in Paragraph 9.09. If Owner designates another representative or agent to represent Owner at the Site who is not Engineer's consultant, agent or employee, the responsibilities and authority and limitations thereon of such other individual or entity will be as provided in the Supplementary Conditions.

9.04 *Authorized Variations in Work*

A. Engineer may authorize minor variations in the Work from the requirements of the Contract Documents which do not involve an adjustment in the Contract Price or the Contract Times and are compatible with the design concept of the completed Project as a functioning whole as indicated by the Contract Documents. These may be accomplished by a Field Order and will be binding on Owner and also on Contractor, who shall perform the Work involved promptly. If Owner or Contractor believes that a Field Order justifies an adjustment in the Contract Price or Contract Times, or both, and the parties are unable to agree on entitlement to or on the amount or extent, if any, of any such adjustment, a Claim may be made therefor as provided in Paragraph 10.05.

9.05 *Rejecting Defective Work*

A. Engineer will have authority to reject Work which Engineer believes to be defective, or that Engineer believes will not produce a completed Project that conforms to the Contract Documents or that will prejudice the integrity of the design concept of the completed Project as a functioning whole as indicated by the Contract Documents. Engineer will also have authority to require special inspection or testing of the Work as provided in Paragraph 13.04, whether or not the Work is fabricated, installed, or completed.

Copyright © 2007 National Society of Professional Engineers for EJCDC. All rights reserved.

9.06 *Shop Drawings, Change Orders and Payments*

A. In connection with Engineer's authority, and limitations thereof, as to Shop Drawings and Samples, see Paragraph 6.17.

B. In connection with Engineer's authority, and limitations thereof, as to design calculations and design drawings submitted in response to a delegation of professional design services, if any, see Paragraph 6.21.

C. In connection with Engineer's authority as to Change Orders, see Articles 10, 11, and 12.

D. In connection with Engineer's authority as to Applications for Payment, see Article 14.

9.07 *Determinations for Unit Price Work*

A. Engineer will determine the actual quantities and classifications of Unit Price Work performed by Contractor. Engineer will review with Contractor the Engineer's preliminary determinations on such matters before rendering a written decision thereon (by recommendation of an Application for Payment or otherwise). Engineer's written decision thereon will be final and binding (except as modified by Engineer to reflect changed factual conditions or more accurate data) upon Owner and Contractor, subject to the provisions of Paragraph 10.05.

9.08 *Decisions on Requirements of Contract Documents and Acceptability of Work*

A. Engineer will be the initial interpreter of the requirements of the Contract Documents and judge of the acceptability of the Work thereunder. All matters in question and other matters between Owner and Contractor arising prior to the date final payment is due relating to the acceptability of the Work, and the interpretation of the requirements of the Contract Documents pertaining to the performance of the Work, will be referred initially to Engineer in writing within 30 days of the event giving rise to the question.

B. Engineer will, with reasonable promptness, render a written decision on the issue referred. If Owner or Contractor believes that any such decision entitles them to an adjustment in the Contract Price or Contract Times or both, a Claim may be made under Paragraph 10.05. The date of Engineer's decision shall be the date of the event giving rise to the issues referenced for the purposes of Paragraph 10.05.B.

C. Engineer's written decision on the issue referred will be final and binding on Owner and Contractor, subject to the provisions of Paragraph 10.05.

D. When functioning as interpreter and judge under this Paragraph 9.08, Engineer will not show partiality to Owner or Contractor and will not be liable in connection with any interpretation or decision rendered in good faith in such capacity.

9.09 *Limitations on Engineer's Authority and Responsibilities*

A. Neither Engineer's authority or responsibility under this Article 9 or under any other provision of the Contract Documents nor any decision made by Engineer in good faith either to exercise or not

Copyright © 2007 National Society of Professional Engineers for EJCDC. All rights reserved.

exercise such authority or responsibility or the undertaking, exercise, or performance of any authority or responsibility by Engineer shall create, impose, or give rise to any duty in contract, tort, or otherwise owed by Engineer to Contractor, any Subcontractor, any Supplier, any other individual or entity, or to any surety for or employee or agent of any of them.

B. Engineer will not supervise, direct, control, or have authority over or be responsible for Contractor's means, methods, techniques, sequences, or procedures of construction, or the safety precautions and programs incident thereto, or for any failure of Contractor to comply with Laws and Regulations applicable to the performance of the Work. Engineer will not be responsible for Contractor's failure to perform the Work in accordance with the Contract Documents.

C. Engineer will not be responsible for the acts or omissions of Contractor or of any Subcontractor, any Supplier, or of any other individual or entity performing any of the Work.

D. Engineer's review of the final Application for Payment and accompanying documentation and all maintenance and operating instructions, schedules, guarantees, bonds, certificates of inspection, tests and approvals, and other documentation required to be delivered by Paragraph 14.07.A will only be to determine generally that their content complies with the requirements of, and in the case of certificates of inspections, tests, and approvals that the results certified indicate compliance with, the Contract Documents.

E. The limitations upon authority and responsibility set forth in this Paragraph 9.09 shall also apply to the Resident Project Representative, if any, and assistants, if any.

9.10 *Compliance with Safety Program*

A. While at the Site, Engineer's employees and representatives shall comply with the specific applicable requirements of Contractor's safety programs of which Engineer has been informed pursuant to Paragraph 6.13.D.

ARTICLE 10 – CHANGES IN THE WORK; CLAIMS

10.01 *Authorized Changes in the Work*

A. Without invalidating the Contract and without notice to any surety, Owner may, at any time or from time to time, order additions, deletions, or revisions in the Work by a Change Order, or a Work Change Directive. Upon receipt of any such document, Contractor shall promptly proceed with the Work involved which will be performed under the applicable conditions of the Contract Documents (except as otherwise specifically provided).

B. If Owner and Contractor are unable to agree on entitlement to, or on the amount or extent, if any, of an adjustment in the Contract Price or Contract Times, or both, that should be allowed as a result of a Work Change Directive, a Claim may be made therefor as provided in Paragraph 10.05.

Copyright © 2007 National Society of Professional Engineers for EJCDC. All rights reserved.

10.02 *Unauthorized Changes in the Work*

A. Contractor shall not be entitled to an increase in the Contract Price or an extension of the Contract Times with respect to any work performed that is not required by the Contract Documents as amended, modified, or supplemented as provided in Paragraph 3.04, except in the case of an emergency as provided in Paragraph 6.16 or in the case of uncovering Work as provided in Paragraph 13.04.D.

10.03 *Execution of Change Orders*

A. Owner and Contractor shall execute appropriate Change Orders recommended by Engineer covering:

1. changes in the Work which are: (i) ordered by Owner pursuant to Paragraph 10.01.A, (ii) required because of acceptance of defective Work under Paragraph 13.08.A or Owner's correction of defective Work under Paragraph 13.09, or (iii) agreed to by the parties;

2. changes in the Contract Price or Contract Times which are agreed to by the parties, including any undisputed sum or amount of time for Work actually performed in accordance with a Work Change Directive; and

3. changes in the Contract Price or Contract Times which embody the substance of any written decision rendered by Engineer pursuant to Paragraph 10.05; provided that, in lieu of executing any such Change Order, an appeal may be taken from any such decision in accordance with the provisions of the Contract Documents and applicable Laws and Regulations, but during any such appeal, Contractor shall carry on the Work and adhere to the Progress Schedule as provided in Paragraph 6.18.A.

10.04 *Notification to Surety*

A. If the provisions of any bond require notice to be given to a surety of any change affecting the general scope of the Work or the provisions of the Contract Documents (including, but not limited to, Contract Price or Contract Times), the giving of any such notice will be Contractor's responsibility. The amount of each applicable bond will be adjusted to reflect the effect of any such change.

10.05 *Claims*

A. *Engineer's Decision Required*: All Claims, except those waived pursuant to Paragraph 14.09, shall be referred to the Engineer for decision. A decision by Engineer shall be required as a condition precedent to any exercise by Owner or Contractor of any rights or remedies either may otherwise have under the Contract Documents or by Laws and Regulations in respect of such Claims.

B. *Notice:* Written notice stating the general nature of each Claim shall be delivered by the claimant to Engineer and the other party to the Contract promptly (but in no event later than 30 days) after the start of the event giving rise thereto. The responsibility to substantiate a Claim shall rest with the party making the Claim. Notice of the amount or extent of the Claim, with supporting data

Copyright © 2007 National Society of Professional Engineers for EJCDC. All rights reserved.

shall be delivered to the Engineer and the other party to the Contract within 60 days after the start of such event (unless Engineer allows additional time for claimant to submit additional or more accurate data in support of such Claim). A Claim for an adjustment in Contract Price shall be prepared in accordance with the provisions of Paragraph 12.01.B. A Claim for an adjustment in Contract Times shall be prepared in accordance with the provisions of Paragraph 12.02.B. Each Claim shall be accompanied by claimant's written statement that the adjustment claimed is the entire adjustment to which the claimant believes it is entitled as a result of said event. The opposing party shall submit any response to Engineer and the claimant within 30 days after receipt of the claimant's last submittal (unless Engineer allows additional time).

C. *Engineer's Action*: Engineer will review each Claim and, within 30 days after receipt of the last submittal of the claimant or the last submittal of the opposing party, if any, take one of the following actions in writing:

1. deny the Claim in whole or in part;

2. approve the Claim; or

3. notify the parties that the Engineer is unable to resolve the Claim if, in the Engineer's sole discretion, it would be inappropriate for the Engineer to do so. For purposes of further resolution of the Claim, such notice shall be deemed a denial.

D. In the event that Engineer does not take action on a Claim within said 30 days, the Claim shall be deemed denied.

E. Engineer's written action under Paragraph 10.05.C or denial pursuant to Paragraphs 10.05.C.3 or 10.05.D will be final and binding upon Owner and Contractor, unless Owner or Contractor invoke the dispute resolution procedure set forth in Article 16 within 30 days of such action or denial.

F. No Claim for an adjustment in Contract Price or Contract Times will be valid if not submitted in accordance with this Paragraph 10.05.

ARTICLE 11 – COST OF THE WORK; ALLOWANCES; UNIT PRICE WORK

11.01 *Cost of the Work*

A. *Costs Included:* The term Cost of the Work means the sum of all costs, except those excluded in Paragraph 11.01.B, necessarily incurred and paid by Contractor in the proper performance of the Work. When the value of any Work covered by a Change Order or when a Claim for an adjustment in Contract Price is determined on the basis of Cost of the Work, the costs to be reimbursed to Contractor will be only those additional or incremental costs required because of the change in the Work or because of the event giving rise to the Claim. Except as otherwise may be agreed to in writing by Owner, such costs shall be in amounts no higher than those prevailing in the locality of the Project, shall not include any of the costs itemized in Paragraph 11.01.B, and shall include only the following items:

Copyright © 2007 National Society of Professional Engineers for EJCDC. All rights reserved.

1. Payroll costs for employees in the direct employ of Contractor in the performance of the Work under schedules of job classifications agreed upon by Owner and Contractor. Such employees shall include, without limitation, superintendents, foremen, and other personnel employed full time on the Work. Payroll costs for employees not employed full time on the Work shall be apportioned on the basis of their time spent on the Work. Payroll costs shall include, but not be limited to, salaries and wages plus the cost of fringe benefits, which shall include social security contributions, unemployment, excise, and payroll taxes, workers' compensation, health and retirement benefits, bonuses, sick leave, vacation and holiday pay applicable thereto. The expenses of performing Work outside of regular working hours, on Saturday, Sunday, or legal holidays, shall be included in the above to the extent authorized by Owner.

2. Cost of all materials and equipment furnished and incorporated in the Work, including costs of transportation and storage thereof, and Suppliers' field services required in connection therewith. All cash discounts shall accrue to Contractor unless Owner deposits funds with Contractor with which to make payments, in which case the cash discounts shall accrue to Owner. All trade discounts, rebates and refunds and returns from sale of surplus materials and equipment shall accrue to Owner, and Contractor shall make provisions so that they may be obtained.

3. Payments made by Contractor to Subcontractors for Work performed by Subcontractors. If required by Owner, Contractor shall obtain competitive bids from subcontractors acceptable to Owner and Contractor and shall deliver such bids to Owner, who will then determine, with the advice of Engineer, which bids, if any, will be acceptable. If any subcontract provides that the Subcontractor is to be paid on the basis of Cost of the Work plus a fee, the Subcontractor's Cost of the Work and fee shall be determined in the same manner as Contractor's Cost of the Work and fee as provided in this Paragraph 11.01.

4. Costs of special consultants (including but not limited to engineers, architects, testing laboratories, surveyors, attorneys, and accountants) employed for services specifically related to the Work.

5. Supplemental costs including the following:

    a. The proportion of necessary transportation, travel, and subsistence expenses of Contractor's employees incurred in discharge of duties connected with the Work.

    b. Cost, including transportation and maintenance, of all materials, supplies, equipment, machinery, appliances, office, and temporary facilities at the Site, and hand tools not owned by the workers, which are consumed in the performance of the Work, and cost, less market value, of such items used but not consumed which remain the property of Contractor.

    c. Rentals of all construction equipment and machinery, and the parts thereof whether rented from Contractor or others in accordance with rental agreements approved by Owner with the advice of Engineer, and the costs of transportation, loading, unloading, assembly, dismantling, and removal thereof. All such costs shall be in accordance with the terms of

Copyright © 2007 National Society of Professional Engineers for EJCDC. All rights reserved.

said rental agreements. The rental of any such equipment, machinery, or parts shall cease when the use thereof is no longer necessary for the Work.

d. Sales, consumer, use, and other similar taxes related to the Work, and for which Contractor is liable, as imposed by Laws and Regulations.

e. Deposits lost for causes other than negligence of Contractor, any Subcontractor, or anyone directly or indirectly employed by any of them or for whose acts any of them may be liable, and royalty payments and fees for permits and licenses.

f. Losses and damages (and related expenses) caused by damage to the Work, not compensated by insurance or otherwise, sustained by Contractor in connection with the performance of the Work (except losses and damages within the deductible amounts of property insurance established in accordance with Paragraph 5.06.D), provided such losses and damages have resulted from causes other than the negligence of Contractor, any Subcontractor, or anyone directly or indirectly employed by any of them or for whose acts any of them may be liable. Such losses shall include settlements made with the written consent and approval of Owner. No such losses, damages, and expenses shall be included in the Cost of the Work for the purpose of determining Contractor's fee.

g. The cost of utilities, fuel, and sanitary facilities at the Site.

h. Minor expenses such as telegrams, long distance telephone calls, telephone service at the Site, express and courier services, and similar petty cash items in connection with the Work.

i. The costs of premiums for all bonds and insurance Contractor is required by the Contract Documents to purchase and maintain.

B. *Costs Excluded:* The term Cost of the Work shall not include any of the following items:

1. Payroll costs and other compensation of Contractor's officers, executives, principals (of partnerships and sole proprietorships), general managers, safety managers, engineers, architects, estimators, attorneys, auditors, accountants, purchasing and contracting agents, expediters, timekeepers, clerks, and other personnel employed by Contractor, whether at the Site or in Contractor's principal or branch office for general administration of the Work and not specifically included in the agreed upon schedule of job classifications referred to in Paragraph 11.01.A.1 or specifically covered by Paragraph 11.01.A.4, all of which are to be considered administrative costs covered by the Contractor's fee.

2. Expenses of Contractor's principal and branch offices other than Contractor's office at the Site.

3. Any part of Contractor's capital expenses, including interest on Contractor's capital employed for the Work and charges against Contractor for delinquent payments.

4. Costs due to the negligence of Contractor, any Subcontractor, or anyone directly or indirectly employed by any of them or for whose acts any of them may be liable, including but not

Copyright © 2007 National Society of Professional Engineers for EJCDC. All rights reserved.

limited to, the correction of defective Work, disposal of materials or equipment wrongly supplied, and making good any damage to property.

5. Other overhead or general expense costs of any kind and the costs of any item not specifically and expressly included in Paragraphs 11.01.A.

C. *Contractor's Fee:* When all the Work is performed on the basis of cost-plus, Contractor's fee shall be determined as set forth in the Agreement. When the value of any Work covered by a Change Order or when a Claim for an adjustment in Contract Price is determined on the basis of Cost of the Work, Contractor's fee shall be determined as set forth in Paragraph 12.01.C.

D. *Documentation:* Whenever the Cost of the Work for any purpose is to be determined pursuant to Paragraphs 11.01.A and 11.01.B, Contractor will establish and maintain records thereof in accordance with generally accepted accounting practices and submit in a form acceptable to Engineer an itemized cost breakdown together with supporting data.

11.02 *Allowances*

A. It is understood that Contractor has included in the Contract Price all allowances so named in the Contract Documents and shall cause the Work so covered to be performed for such sums and by such persons or entities as may be acceptable to Owner and Engineer.

B. *Cash Allowances:*

1. Contractor agrees that:

a. the cash allowances include the cost to Contractor (less any applicable trade discounts) of materials and equipment required by the allowances to be delivered at the Site, and all applicable taxes; and

b. Contractor's costs for unloading and handling on the Site, labor, installation, overhead, profit, and other expenses contemplated for the cash allowances have been included in the Contract Price and not in the allowances, and no demand for additional payment on account of any of the foregoing will be valid.

C. *Contingency Allowance:*

1. Contractor agrees that a contingency allowance, if any, is for the sole use of Owner to cover unanticipated costs.

D. Prior to final payment, an appropriate Change Order will be issued as recommended by Engineer to reflect actual amounts due Contractor on account of Work covered by allowances, and the Contract Price shall be correspondingly adjusted.

11.03 *Unit Price Work*

A. Where the Contract Documents provide that all or part of the Work is to be Unit Price Work, initially the Contract Price will be deemed to include for all Unit Price Work an amount equal to

Copyright © 2007 National Society of Professional Engineers for EJCDC. All rights reserved.

the sum of the unit price for each separately identified item of Unit Price Work times the estimated quantity of each item as indicated in the Agreement.

B. The estimated quantities of items of Unit Price Work are not guaranteed and are solely for the purpose of comparison of Bids and determining an initial Contract Price. Determinations of the actual quantities and classifications of Unit Price Work performed by Contractor will be made by Engineer subject to the provisions of Paragraph 9.07.

C. Each unit price will be deemed to include an amount considered by Contractor to be adequate to cover Contractor's overhead and profit for each separately identified item.

D. Owner or Contractor may make a Claim for an adjustment in the Contract Price in accordance with Paragraph 10.05 if:

1. the quantity of any item of Unit Price Work performed by Contractor differs materially and significantly from the estimated quantity of such item indicated in the Agreement; and

2. there is no corresponding adjustment with respect to any other item of Work; and

3. Contractor believes that Contractor is entitled to an increase in Contract Price as a result of having incurred additional expense or Owner believes that Owner is entitled to a decrease in Contract Price and the parties are unable to agree as to the amount of any such increase or decrease.

ARTICLE 12 – CHANGE OF CONTRACT PRICE; CHANGE OF CONTRACT TIMES

12.01 *Change of Contract Price*

A. The Contract Price may only be changed by a Change Order. Any Claim for an adjustment in the Contract Price shall be based on written notice submitted by the party making the Claim to the Engineer and the other party to the Contract in accordance with the provisions of Paragraph 10.05.

B. The value of any Work covered by a Change Order or of any Claim for an adjustment in the Contract Price will be determined as follows:

1. where the Work involved is covered by unit prices contained in the Contract Documents, by application of such unit prices to the quantities of the items involved (subject to the provisions of Paragraph 11.03); or

2. where the Work involved is not covered by unit prices contained in the Contract Documents, by a mutually agreed lump sum (which may include an allowance for overhead and profit not necessarily in accordance with Paragraph 12.01.C.2); or

3. where the Work involved is not covered by unit prices contained in the Contract Documents and agreement to a lump sum is not reached under Paragraph 12.01.B.2, on the basis of the Cost of the Work (determined as provided in Paragraph 11.01) plus a Contractor's fee for overhead and profit (determined as provided in Paragraph 12.01.C).

Copyright © 2007 National Society of Professional Engineers for EJCDC. All rights reserved.

C. *Contractor's Fee:* The Contractor's fee for overhead and profit shall be determined as follows:

1. a mutually acceptable fixed fee; or

2. if a fixed fee is not agreed upon, then a fee based on the following percentages of the various portions of the Cost of the Work:

   a. for costs incurred under Paragraphs 11.01.A.1 and 11.01.A.2, the Contractor's fee shall be 15 percent;

   b. for costs incurred under Paragraph 11.01.A.3, the Contractor's fee shall be five percent;

   c. where one or more tiers of subcontracts are on the basis of Cost of the Work plus a fee and no fixed fee is agreed upon, the intent of Paragraphs 12.01.C.2.a and 12.01.C.2.b is that the Subcontractor who actually performs the Work, at whatever tier, will be paid a fee of 15 percent of the costs incurred by such Subcontractor under Paragraphs 11.01.A.1 and 11.01.A.2 and that any higher tier Subcontractor and Contractor will each be paid a fee of five percent of the amount paid to the next lower tier Subcontractor;

   d. no fee shall be payable on the basis of costs itemized under Paragraphs 11.01.A.4, 11.01.A.5, and 11.01.B;

   e. the amount of credit to be allowed by Contractor to Owner for any change which results in a net decrease in cost will be the amount of the actual net decrease in cost plus a deduction in Contractor's fee by an amount equal to five percent of such net decrease; and

   f. when both additions and credits are involved in any one change, the adjustment in Contractor's fee shall be computed on the basis of the net change in accordance with Paragraphs 12.01.C.2.a through 12.01.C.2.e, inclusive.

12.02 *Change of Contract Times*

A. The Contract Times may only be changed by a Change Order. Any Claim for an adjustment in the Contract Times shall be based on written notice submitted by the party making the Claim to the Engineer and the other party to the Contract in accordance with the provisions of Paragraph 10.05.

B. Any adjustment of the Contract Times covered by a Change Order or any Claim for an adjustment in the Contract Times will be determined in accordance with the provisions of this Article 12.

12.03 *Delays*

A. Where Contractor is prevented from completing any part of the Work within the Contract Times due to delay beyond the control of Contractor, the Contract Times will be extended in an amount equal to the time lost due to such delay if a Claim is made therefor as provided in Paragraph 12.02.A. Delays beyond the control of Contractor shall include, but not be limited to, acts or

Copyright © 2007 National Society of Professional Engineers for EJCDC. All rights reserved.

neglect by Owner, acts or neglect of utility owners or other contractors performing other work as contemplated by Article 7, fires, floods, epidemics, abnormal weather conditions, or acts of God.

B. If Owner, Engineer, or other contractors or utility owners performing other work for Owner as contemplated by Article 7, or anyone for whom Owner is responsible, delays, disrupts, or interferes with the performance or progress of the Work, then Contractor shall be entitled to an equitable adjustment in the Contract Price or the Contract Times, or both. Contractor's entitlement to an adjustment of the Contract Times is conditioned on such adjustment being essential to Contractor's ability to complete the Work within the Contract Times.

C. If Contractor is delayed in the performance or progress of the Work by fire, flood, epidemic, abnormal weather conditions, acts of God, acts or failures to act of utility owners not under the control of Owner, or other causes not the fault of and beyond control of Owner and Contractor, then Contractor shall be entitled to an equitable adjustment in Contract Times, if such adjustment is essential to Contractor's ability to complete the Work within the Contract Times. Such an adjustment shall be Contractor's sole and exclusive remedy for the delays described in this Paragraph 12.03.C.

D. Owner, Engineer, and their officers, directors, members, partners, employees, agents, consultants, or subcontractors shall not be liable to Contractor for any claims, costs, losses, or damages (including but not limited to all fees and charges of engineers, architects, attorneys, and other professionals and all court or arbitration or other dispute resolution costs) sustained by Contractor on or in connection with any other project or anticipated project.

E. Contractor shall not be entitled to an adjustment in Contract Price or Contract Times for delays within the control of Contractor. Delays attributable to and within the control of a Subcontractor or Supplier shall be deemed to be delays within the control of Contractor.

ARTICLE 13 – TESTS AND INSPECTIONS; CORRECTION, REMOVAL OR ACCEPTANCE OF DEFECTIVE WORK

13.01 *Notice of Defects*

A. Prompt notice of all defective Work of which Owner or Engineer has actual knowledge will be given to Contractor. Defective Work may be rejected, corrected, or accepted as provided in this Article 13.

13.02 *Access to Work*

A. Owner, Engineer, their consultants and other representatives and personnel of Owner, independent testing laboratories, and governmental agencies with jurisdictional interests will have access to the Site and the Work at reasonable times for their observation, inspection, and testing. Contractor shall provide them proper and safe conditions for such access and advise them of Contractor's safety procedures and programs so that they may comply therewith as applicable.

Copyright © 2007 National Society of Professional Engineers for EJCDC. All rights reserved.

13.03 *Tests and Inspections*

A. Contractor shall give Engineer timely notice of readiness of the Work for all required inspections, tests, or approvals and shall cooperate with inspection and testing personnel to facilitate required inspections or tests.

B. Owner shall employ and pay for the services of an independent testing laboratory to perform all inspections, tests, or approvals required by the Contract Documents except:

1. for inspections, tests, or approvals covered by Paragraphs 13.03.C and 13.03.D below;

2. that costs incurred in connection with tests or inspections conducted pursuant to Paragraph 13.04.B shall be paid as provided in Paragraph 13.04.C; and

3. as otherwise specifically provided in the Contract Documents.

C. If Laws or Regulations of any public body having jurisdiction require any Work (or part thereof) specifically to be inspected, tested, or approved by an employee or other representative of such public body, Contractor shall assume full responsibility for arranging and obtaining such inspections, tests, or approvals, pay all costs in connection therewith, and furnish Engineer the required certificates of inspection or approval.

D. Contractor shall be responsible for arranging and obtaining and shall pay all costs in connection with any inspections, tests, or approvals required for Owner's and Engineer's acceptance of materials or equipment to be incorporated in the Work; or acceptance of materials, mix designs, or equipment submitted for approval prior to Contractor's purchase thereof for incorporation in the Work. Such inspections, tests, or approvals shall be performed by organizations acceptable to Owner and Engineer.

E. If any Work (or the work of others) that is to be inspected, tested, or approved is covered by Contractor without written concurrence of Engineer, Contractor shall, if requested by Engineer, uncover such Work for observation.

F. Uncovering Work as provided in Paragraph 13.03.E shall be at Contractor's expense unless Contractor has given Engineer timely notice of Contractor's intention to cover the same and Engineer has not acted with reasonable promptness in response to such notice.

13.04 *Uncovering Work*

A. If any Work is covered contrary to the written request of Engineer, it must, if requested by Engineer, be uncovered for Engineer's observation and replaced at Contractor's expense.

B. If Engineer considers it necessary or advisable that covered Work be observed by Engineer or inspected or tested by others, Contractor, at Engineer's request, shall uncover, expose, or otherwise make available for observation, inspection, or testing as Engineer may require, that portion of the Work in question, furnishing all necessary labor, material, and equipment.

Copyright © 2007 National Society of Professional Engineers for EJCDC. All rights reserved.

C. If it is found that the uncovered Work is defective, Contractor shall pay all claims, costs, losses, and damages (including but not limited to all fees and charges of engineers, architects, attorneys, and other professionals and all court or arbitration or other dispute resolution costs) arising out of or relating to such uncovering, exposure, observation, inspection, and testing, and of satisfactory replacement or reconstruction (including but not limited to all costs of repair or replacement of work of others); and Owner shall be entitled to an appropriate decrease in the Contract Price. If the parties are unable to agree as to the amount thereof, Owner may make a Claim therefor as provided in Paragraph 10.05.

D. If the uncovered Work is not found to be defective, Contractor shall be allowed an increase in the Contract Price or an extension of the Contract Times, or both, directly attributable to such uncovering, exposure, observation, inspection, testing, replacement, and reconstruction. If the parties are unable to agree as to the amount or extent thereof, Contractor may make a Claim therefor as provided in Paragraph 10.05.

13.05 *Owner May Stop the Work*

A. If the Work is defective, or Contractor fails to supply sufficient skilled workers or suitable materials or equipment, or fails to perform the Work in such a way that the completed Work will conform to the Contract Documents, Owner may order Contractor to stop the Work, or any portion thereof, until the cause for such order has been eliminated; however, this right of Owner to stop the Work shall not give rise to any duty on the part of Owner to exercise this right for the benefit of Contractor, any Subcontractor, any Supplier, any other individual or entity, or any surety for, or employee or agent of any of them.

13.06 *Correction or Removal of Defective Work*

A. Promptly after receipt of written notice, Contractor shall correct all defective Work, whether or not fabricated, installed, or completed, or, if the Work has been rejected by Engineer, remove it from the Project and replace it with Work that is not defective. Contractor shall pay all claims, costs, losses, and damages (including but not limited to all fees and charges of engineers, architects, attorneys, and other professionals and all court or arbitration or other dispute resolution costs) arising out of or relating to such correction or removal (including but not limited to all costs of repair or replacement of work of others).

B. When correcting defective Work under the terms of this Paragraph 13.06 or Paragraph 13.07, Contractor shall take no action that would void or otherwise impair Owner's special warranty and guarantee, if any, on said Work.

13.07 *Correction Period*

A. If within one year after the date of Substantial Completion (or such longer period of time as may be prescribed by the terms of any applicable special guarantee required by the Contract Documents) or by any specific provision of the Contract Documents, any Work is found to be defective, or if the repair of any damages to the land or areas made available for Contractor's use by Owner or permitted by Laws and Regulations as contemplated in Paragraph 6.11.A is found to be defective, Contractor shall promptly, without cost to Owner and in accordance with Owner's written instructions:

Copyright © 2007 National Society of Professional Engineers for EJCDC. All rights reserved.

1. repair such defective land or areas; or

2. correct such defective Work; or

3. if the defective Work has been rejected by Owner, remove it from the Project and replace it with Work that is not defective, and

4. satisfactorily correct or repair or remove and replace any damage to other Work, to the work of others or other land or areas resulting therefrom.

B. If Contractor does not promptly comply with the terms of Owner's written instructions, or in an emergency where delay would cause serious risk of loss or damage, Owner may have the defective Work corrected or repaired or may have the rejected Work removed and replaced. All claims, costs, losses, and damages (including but not limited to all fees and charges of engineers, architects, attorneys, and other professionals and all court or arbitration or other dispute resolution costs) arising out of or relating to such correction or repair or such removal and replacement (including but not limited to all costs of repair or replacement of work of others) will be paid by Contractor.

C. In special circumstances where a particular item of equipment is placed in continuous service before Substantial Completion of all the Work, the correction period for that item may start to run from an earlier date if so provided in the Specifications.

D. Where defective Work (and damage to other Work resulting therefrom) has been corrected or removed and replaced under this Paragraph 13.07, the correction period hereunder with respect to such Work will be extended for an additional period of one year after such correction or removal and replacement has been satisfactorily completed.

E. Contractor's obligations under this Paragraph 13.07 are in addition to any other obligation or warranty. The provisions of this Paragraph 13.07 shall not be construed as a substitute for, or a waiver of, the provisions of any applicable statute of limitation or repose.

13.08 *Acceptance of Defective Work*

A. If, instead of requiring correction or removal and replacement of defective Work, Owner (and, prior to Engineer's recommendation of final payment, Engineer) prefers to accept it, Owner may do so. Contractor shall pay all claims, costs, losses, and damages (including but not limited to all fees and charges of engineers, architects, attorneys, and other professionals and all court or arbitration or other dispute resolution costs) attributable to Owner's evaluation of and determination to accept such defective Work (such costs to be approved by Engineer as to reasonableness) and for the diminished value of the Work to the extent not otherwise paid by Contractor pursuant to this sentence. If any such acceptance occurs prior to Engineer's recommendation of final payment, a Change Order will be issued incorporating the necessary revisions in the Contract Documents with respect to the Work, and Owner shall be entitled to an appropriate decrease in the Contract Price, reflecting the diminished value of Work so accepted. If the parties are unable to agree as to the amount thereof, Owner may make a Claim therefor as provided in Paragraph 10.05. If the acceptance occurs after such recommendation, an appropriate amount will be paid by Contractor to Owner.

Copyright © 2007 National Society of Professional Engineers for EJCDC. All rights reserved.

13.09 *Owner May Correct Defective Work*

A. If Contractor fails within a reasonable time after written notice from Engineer to correct defective Work, or to remove and replace rejected Work as required by Engineer in accordance with Paragraph 13.06.A, or if Contractor fails to perform the Work in accordance with the Contract Documents, or if Contractor fails to comply with any other provision of the Contract Documents, Owner may, after seven days written notice to Contractor, correct, or remedy any such deficiency.

B. In exercising the rights and remedies under this Paragraph 13.09, Owner shall proceed expeditiously. In connection with such corrective or remedial action, Owner may exclude Contractor from all or part of the Site, take possession of all or part of the Work and suspend Contractor's services related thereto, take possession of Contractor's tools, appliances, construction equipment and machinery at the Site, and incorporate in the Work all materials and equipment stored at the Site or for which Owner has paid Contractor but which are stored elsewhere. Contractor shall allow Owner, Owner's representatives, agents and employees, Owner's other contractors, and Engineer and Engineer's consultants access to the Site to enable Owner to exercise the rights and remedies under this Paragraph.

C. All claims, costs, losses, and damages (including but not limited to all fees and charges of engineers, architects, attorneys, and other professionals and all court or arbitration or other dispute resolution costs) incurred or sustained by Owner in exercising the rights and remedies under this Paragraph 13.09 will be charged against Contractor, and a Change Order will be issued incorporating the necessary revisions in the Contract Documents with respect to the Work; and Owner shall be entitled to an appropriate decrease in the Contract Price. If the parties are unable to agree as to the amount of the adjustment, Owner may make a Claim therefor as provided in Paragraph 10.05. Such claims, costs, losses and damages will include but not be limited to all costs of repair, or replacement of work of others destroyed or damaged by correction, removal, or replacement of Contractor's defective Work.

D. Contractor shall not be allowed an extension of the Contract Times because of any delay in the performance of the Work attributable to the exercise by Owner of Owner's rights and remedies under this Paragraph 13.09.

ARTICLE 14 – PAYMENTS TO CONTRACTOR AND COMPLETION

14.01 *Schedule of Values*

A. The Schedule of Values established as provided in Paragraph 2.07.A will serve as the basis for progress payments and will be incorporated into a form of Application for Payment acceptable to Engineer. Progress payments on account of Unit Price Work will be based on the number of units completed.

14.02 *Progress Payments*

A. *Applications for Payments:*

1. At least 20 days before the date established in the Agreement for each progress payment (but not more often than once a month), Contractor shall submit to Engineer for review an

Copyright © 2007 National Society of Professional Engineers for EJCDC. All rights reserved.

Application for Payment filled out and signed by Contractor covering the Work completed as of the date of the Application and accompanied by such supporting documentation as is required by the Contract Documents. If payment is requested on the basis of materials and equipment not incorporated in the Work but delivered and suitably stored at the Site or at another location agreed to in writing, the Application for Payment shall also be accompanied by a bill of sale, invoice, or other documentation warranting that Owner has received the materials and equipment free and clear of all Liens and evidence that the materials and equipment are covered by appropriate property insurance or other arrangements to protect Owner's interest therein, all of which must be satisfactory to Owner.

2. Beginning with the second Application for Payment, each Application shall include an affidavit of Contractor stating that all previous progress payments received on account of the Work have been applied on account to discharge Contractor's legitimate obligations associated with prior Applications for Payment.

3. The amount of retainage with respect to progress payments will be as stipulated in the Agreement.

B. *Review of Applications:*

1. Engineer will, within 10 days after receipt of each Application for Payment, either indicate in writing a recommendation of payment and present the Application to Owner or return the Application to Contractor indicating in writing Engineer's reasons for refusing to recommend payment. In the latter case, Contractor may make the necessary corrections and resubmit the Application.

2. Engineer's recommendation of any payment requested in an Application for Payment will constitute a representation by Engineer to Owner, based on Engineer's observations of the executed Work as an experienced and qualified design professional, and on Engineer's review of the Application for Payment and the accompanying data and schedules, that to the best of Engineer's knowledge, information and belief:

   a. the Work has progressed to the point indicated;

   b. the quality of the Work is generally in accordance with the Contract Documents (subject to an evaluation of the Work as a functioning whole prior to or upon Substantial Completion, the results of any subsequent tests called for in the Contract Documents, a final determination of quantities and classifications for Unit Price Work under Paragraph 9.07, and any other qualifications stated in the recommendation); and

   c. the conditions precedent to Contractor's being entitled to such payment appear to have been fulfilled in so far as it is Engineer's responsibility to observe the Work.

3. By recommending any such payment Engineer will not thereby be deemed to have represented that:

   a. inspections made to check the quality or the quantity of the Work as it has been performed have been exhaustive, extended to every aspect of the Work in progress, or

Copyright © 2007 National Society of Professional Engineers for EJCDC. All rights reserved.

involved detailed inspections of the Work beyond the responsibilities specifically assigned to Engineer in the Contract Documents; or

b. there may not be other matters or issues between the parties that might entitle Contractor to be paid additionally by Owner or entitle Owner to withhold payment to Contractor.

4. Neither Engineer's review of Contractor's Work for the purposes of recommending payments nor Engineer's recommendation of any payment, including final payment, will impose responsibility on Engineer:

   a. to supervise, direct, or control the Work, or

   b. for the means, methods, techniques, sequences, or procedures of construction, or the safety precautions and programs incident thereto, or

   c. for Contractor's failure to comply with Laws and Regulations applicable to Contractor's performance of the Work, or

   d. to make any examination to ascertain how or for what purposes Contractor has used the moneys paid on account of the Contract Price, or

   e. to determine that title to any of the Work, materials, or equipment has passed to Owner free and clear of any Liens.

5. Engineer may refuse to recommend the whole or any part of any payment if, in Engineer's opinion, it would be incorrect to make the representations to Owner stated in Paragraph 14.02.B.2. Engineer may also refuse to recommend any such payment or, because of subsequently discovered evidence or the results of subsequent inspections or tests, revise or revoke any such payment recommendation previously made, to such extent as may be necessary in Engineer's opinion to protect Owner from loss because:

   a. the Work is defective, or completed Work has been damaged, requiring correction or replacement;

   b. the Contract Price has been reduced by Change Orders;

   c. Owner has been required to correct defective Work or complete Work in accordance with Paragraph 13.09; or

   d. Engineer has actual knowledge of the occurrence of any of the events enumerated in Paragraph 15.02.A.

C. *Payment Becomes Due:*

1. Ten days after presentation of the Application for Payment to Owner with Engineer's recommendation, the amount recommended will (subject to the provisions of Paragraph 14.02.D) become due, and when due will be paid by Owner to Contractor.

Copyright © 2007 National Society of Professional Engineers for EJCDC. All rights reserved.

D. *Reduction in Payment:*

1. Owner may refuse to make payment of the full amount recommended by Engineer because:

   a. claims have been made against Owner on account of Contractor's performance or furnishing of the Work;

   b. Liens have been filed in connection with the Work, except where Contractor has delivered a specific bond satisfactory to Owner to secure the satisfaction and discharge of such Liens;

   c. there are other items entitling Owner to a set-off against the amount recommended; or

   d. Owner has actual knowledge of the occurrence of any of the events enumerated in Paragraphs 14.02.B.5.a through 14.02.B.5.c or Paragraph 15.02.A.

2. If Owner refuses to make payment of the full amount recommended by Engineer, Owner will give Contractor immediate written notice (with a copy to Engineer) stating the reasons for such action and promptly pay Contractor any amount remaining after deduction of the amount so withheld. Owner shall promptly pay Contractor the amount so withheld, or any adjustment thereto agreed to by Owner and Contractor, when Contractor remedies the reasons for such action.

3. Upon a subsequent determination that Owner's refusal of payment was not justified, the amount wrongfully withheld shall be treated as an amount due as determined by Paragraph 14.02.C.1 and subject to interest as provided in the Agreement.

14.03 *Contractor's Warranty of Title*

A. Contractor warrants and guarantees that title to all Work, materials, and equipment covered by any Application for Payment, whether incorporated in the Project or not, will pass to Owner no later than the time of payment free and clear of all Liens.

14.04 *Substantial Completion*

A. When Contractor considers the entire Work ready for its intended use Contractor shall notify Owner and Engineer in writing that the entire Work is substantially complete (except for items specifically listed by Contractor as incomplete) and request that Engineer issue a certificate of Substantial Completion.

B. Promptly after Contractor's notification, Owner, Contractor, and Engineer shall make an inspection of the Work to determine the status of completion. If Engineer does not consider the Work substantially complete, Engineer will notify Contractor in writing giving the reasons therefor.

C. If Engineer considers the Work substantially complete, Engineer will deliver to Owner a tentative certificate of Substantial Completion which shall fix the date of Substantial Completion. There shall be attached to the certificate a tentative list of items to be completed or corrected before

Copyright © 2007 National Society of Professional Engineers for EJCDC. All rights reserved.

final payment. Owner shall have seven days after receipt of the tentative certificate during which to make written objection to Engineer as to any provisions of the certificate or attached list. If, after considering such objections, Engineer concludes that the Work is not substantially complete, Engineer will, within 14 days after submission of the tentative certificate to Owner, notify Contractor in writing, stating the reasons therefor. If, after consideration of Owner's objections, Engineer considers the Work substantially complete, Engineer will, within said 14 days, execute and deliver to Owner and Contractor a definitive certificate of Substantial Completion (with a revised tentative list of items to be completed or corrected) reflecting such changes from the tentative certificate as Engineer believes justified after consideration of any objections from Owner.

D. At the time of delivery of the tentative certificate of Substantial Completion, Engineer will deliver to Owner and Contractor a written recommendation as to division of responsibilities pending final payment between Owner and Contractor with respect to security, operation, safety, and protection of the Work, maintenance, heat, utilities, insurance, and warranties and guarantees. Unless Owner and Contractor agree otherwise in writing and so inform Engineer in writing prior to Engineer's issuing the definitive certificate of Substantial Completion, Engineer's aforesaid recommendation will be binding on Owner and Contractor until final payment.

E. Owner shall have the right to exclude Contractor from the Site after the date of Substantial Completion subject to allowing Contractor reasonable access to remove its property and complete or correct items on the tentative list.

14.05 *Partial Utilization*

A. Prior to Substantial Completion of all the Work, Owner may use or occupy any substantially completed part of the Work which has specifically been identified in the Contract Documents, or which Owner, Engineer, and Contractor agree constitutes a separately functioning and usable part of the Work that can be used by Owner for its intended purpose without significant interference with Contractor's performance of the remainder of the Work, subject to the following conditions:

1. Owner at any time may request Contractor in writing to permit Owner to use or occupy any such part of the Work which Owner believes to be ready for its intended use and substantially complete. If and when Contractor agrees that such part of the Work is substantially complete, Contractor, Owner, and Engineer will follow the procedures of Paragraph 14.04.A through D for that part of the Work.

2. Contractor at any time may notify Owner and Engineer in writing that Contractor considers any such part of the Work ready for its intended use and substantially complete and request Engineer to issue a certificate of Substantial Completion for that part of the Work.

3. Within a reasonable time after either such request, Owner, Contractor, and Engineer shall make an inspection of that part of the Work to determine its status of completion. If Engineer does not consider that part of the Work to be substantially complete, Engineer will notify Owner and Contractor in writing giving the reasons therefor. If Engineer considers that part of the Work to be substantially complete, the provisions of Paragraph 14.04 will apply with respect to certification of Substantial Completion of that part of the Work and the division of responsibility in respect thereof and access thereto.

Copyright © 2007 National Society of Professional Engineers for EJCDC. All rights reserved.

4. No use or occupancy or separate operation of part of the Work may occur prior to compliance with the requirements of Paragraph 5.10 regarding property insurance.

14.06 *Final Inspection*

A. Upon written notice from Contractor that the entire Work or an agreed portion thereof is complete, Engineer will promptly make a final inspection with Owner and Contractor and will notify Contractor in writing of all particulars in which this inspection reveals that the Work is incomplete or defective. Contractor shall immediately take such measures as are necessary to complete such Work or remedy such deficiencies.

14.07 *Final Payment*

A. *Application for Payment:*

1. After Contractor has, in the opinion of Engineer, satisfactorily completed all corrections identified during the final inspection and has delivered, in accordance with the Contract Documents, all maintenance and operating instructions, schedules, guarantees, bonds, certificates or other evidence of insurance, certificates of inspection, marked-up record documents (as provided in Paragraph 6.12), and other documents, Contractor may make application for final payment following the procedure for progress payments.

2. The final Application for Payment shall be accompanied (except as previously delivered) by:

   a. all documentation called for in the Contract Documents, including but not limited to the evidence of insurance required by Paragraph 5.04.B.6;

   b. consent of the surety, if any, to final payment;

   c. a list of all Claims against Owner that Contractor believes are unsettled; and

   d. complete and legally effective releases or waivers (satisfactory to Owner) of all Lien rights arising out of or Liens filed in connection with the Work.

3. In lieu of the releases or waivers of Liens specified in Paragraph 14.07.A.2 and as approved by Owner, Contractor may furnish receipts or releases in full and an affidavit of Contractor that: (i) the releases and receipts include all labor, services, material, and equipment for which a Lien could be filed; and (ii) all payrolls, material and equipment bills, and other indebtedness connected with the Work for which Owner might in any way be responsible, or which might in any way result in liens or other burdens on Owner's property, have been paid or otherwise satisfied. If any Subcontractor or Supplier fails to furnish such a release or receipt in full, Contractor may furnish a bond or other collateral satisfactory to Owner to indemnify Owner against any Lien.

B. *Engineer's Review of Application and Acceptance:*

1. If, on the basis of Engineer's observation of the Work during construction and final inspection, and Engineer's review of the final Application for Payment and accompanying

Copyright © 2007 National Society of Professional Engineers for EJCDC. All rights reserved.

documentation as required by the Contract Documents, Engineer is satisfied that the Work has been completed and Contractor's other obligations under the Contract Documents have been fulfilled, Engineer will, within ten days after receipt of the final Application for Payment, indicate in writing Engineer's recommendation of payment and present the Application for Payment to Owner for payment. At the same time Engineer will also give written notice to Owner and Contractor that the Work is acceptable subject to the provisions of Paragraph 14.09. Otherwise, Engineer will return the Application for Payment to Contractor, indicating in writing the reasons for refusing to recommend final payment, in which case Contractor shall make the necessary corrections and resubmit the Application for Payment.

C. *Payment Becomes Due:*

1. Thirty days after the presentation to Owner of the Application for Payment and accompanying documentation, the amount recommended by Engineer, less any sum Owner is entitled to set off against Engineer's recommendation, including but not limited to liquidated damages, will become due and will be paid by Owner to Contractor.

14.08 *Final Completion Delayed*

A. If, through no fault of Contractor, final completion of the Work is significantly delayed, and if Engineer so confirms, Owner shall, upon receipt of Contractor's final Application for Payment (for Work fully completed and accepted) and recommendation of Engineer, and without terminating the Contract, make payment of the balance due for that portion of the Work fully completed and accepted. If the remaining balance to be held by Owner for Work not fully completed or corrected is less than the retainage stipulated in the Agreement, and if bonds have been furnished as required in Paragraph 5.01, the written consent of the surety to the payment of the balance due for that portion of the Work fully completed and accepted shall be submitted by Contractor to Engineer with the Application for such payment. Such payment shall be made under the terms and conditions governing final payment, except that it shall not constitute a waiver of Claims.

14.09 *Waiver of Claims*

A. The making and acceptance of final payment will constitute:

1. a waiver of all Claims by Owner against Contractor, except Claims arising from unsettled Liens, from defective Work appearing after final inspection pursuant to Paragraph 14.06, from failure to comply with the Contract Documents or the terms of any special guarantees specified therein, or from Contractor's continuing obligations under the Contract Documents; and

2. a waiver of all Claims by Contractor against Owner other than those previously made in accordance with the requirements herein and expressly acknowledged by Owner in writing as still unsettled.

Copyright © 2007 National Society of Professional Engineers for EJCDC. All rights reserved.

ARTICLE 15 – SUSPENSION OF WORK AND TERMINATION

15.01 *Owner May Suspend Work*

A. At any time and without cause, Owner may suspend the Work or any portion thereof for a period of not more than 90 consecutive days by notice in writing to Contractor and Engineer which will fix the date on which Work will be resumed. Contractor shall resume the Work on the date so fixed. Contractor shall be granted an adjustment in the Contract Price or an extension of the Contract Times, or both, directly attributable to any such suspension if Contractor makes a Claim therefor as provided in Paragraph 10.05.

15.02 *Owner May Terminate for Cause*

A. The occurrence of any one or more of the following events will justify termination for cause:

1. Contractor's persistent failure to perform the Work in accordance with the Contract Documents (including, but not limited to, failure to supply sufficient skilled workers or suitable materials or equipment or failure to adhere to the Progress Schedule established under Paragraph 2.07 as adjusted from time to time pursuant to Paragraph 6.04);

2. Contractor's disregard of Laws or Regulations of any public body having jurisdiction;

3. Contractor's repeated disregard of the authority of Engineer; or

4. Contractor's violation in any substantial way of any provisions of the Contract Documents.

B. If one or more of the events identified in Paragraph 15.02.A occur, Owner may, after giving Contractor (and surety) seven days written notice of its intent to terminate the services of Contractor:

1. exclude Contractor from the Site, and take possession of the Work and of all Contractor's tools, appliances, construction equipment, and machinery at the Site, and use the same to the full extent they could be used by Contractor (without liability to Contractor for trespass or conversion);

2. incorporate in the Work all materials and equipment stored at the Site or for which Owner has paid Contractor but which are stored elsewhere; and

3. complete the Work as Owner may deem expedient.

C. If Owner proceeds as provided in Paragraph 15.02.B, Contractor shall not be entitled to receive any further payment until the Work is completed. If the unpaid balance of the Contract Price exceeds all claims, costs, losses, and damages (including but not limited to all fees and charges of engineers, architects, attorneys, and other professionals and all court or arbitration or other dispute resolution costs) sustained by Owner arising out of or relating to completing the Work, such excess will be paid to Contractor. If such claims, costs, losses, and damages exceed such unpaid balance, Contractor shall pay the difference to Owner. Such claims, costs, losses, and damages incurred by Owner will be reviewed by Engineer as to their reasonableness and, when

Copyright © 2007 National Society of Professional Engineers for EJCDC. All rights reserved.

so approved by Engineer, incorporated in a Change Order. When exercising any rights or remedies under this Paragraph, Owner shall not be required to obtain the lowest price for the Work performed.

D. Notwithstanding Paragraphs 15.02.B and 15.02.C, Contractor's services will not be terminated if Contractor begins within seven days of receipt of notice of intent to terminate to correct its failure to perform and proceeds diligently to cure such failure within no more than 30 days of receipt of said notice.

E. Where Contractor's services have been so terminated by Owner, the termination will not affect any rights or remedies of Owner against Contractor then existing or which may thereafter accrue. Any retention or payment of moneys due Contractor by Owner will not release Contractor from liability.

F. If and to the extent that Contractor has provided a performance bond under the provisions of Paragraph 5.01.A, the termination procedures of that bond shall supersede the provisions of Paragraphs 15.02.B and 15.02.C.

15.03 *Owner May Terminate For Convenience*

A. Upon seven days written notice to Contractor and Engineer, Owner may, without cause and without prejudice to any other right or remedy of Owner, terminate the Contract. In such case, Contractor shall be paid for (without duplication of any items):

1. completed and acceptable Work executed in accordance with the Contract Documents prior to the effective date of termination, including fair and reasonable sums for overhead and profit on such Work;

2. expenses sustained prior to the effective date of termination in performing services and furnishing labor, materials, or equipment as required by the Contract Documents in connection with uncompleted Work, plus fair and reasonable sums for overhead and profit on such expenses;

3. all claims, costs, losses, and damages (including but not limited to all fees and charges of engineers, architects, attorneys, and other professionals and all court or arbitration or other dispute resolution costs) incurred in settlement of terminated contracts with Subcontractors, Suppliers, and others; and

4. reasonable expenses directly attributable to termination.

B. Contractor shall not be paid on account of loss of anticipated profits or revenue or other economic loss arising out of or resulting from such termination.

15.04 *Contractor May Stop Work or Terminate*

A. If, through no act or fault of Contractor, (i) the Work is suspended for more than 90 consecutive days by Owner or under an order of court or other public authority, or (ii) Engineer fails to act on any Application for Payment within 30 days after it is submitted, or (iii) Owner fails for 30 days

Copyright © 2007 National Society of Professional Engineers for EJCDC. All rights reserved.

to pay Contractor any sum finally determined to be due, then Contractor may, upon seven days written notice to Owner and Engineer, and provided Owner or Engineer do not remedy such suspension or failure within that time, terminate the Contract and recover from Owner payment on the same terms as provided in Paragraph 15.03.

B. In lieu of terminating the Contract and without prejudice to any other right or remedy, if Engineer has failed to act on an Application for Payment within 30 days after it is submitted, or Owner has failed for 30 days to pay Contractor any sum finally determined to be due, Contractor may, seven days after written notice to Owner and Engineer, stop the Work until payment is made of all such amounts due Contractor, including interest thereon. The provisions of this Paragraph 15.04 are not intended to preclude Contractor from making a Claim under Paragraph 10.05 for an adjustment in Contract Price or Contract Times or otherwise for expenses or damage directly attributable to Contractor's stopping the Work as permitted by this Paragraph.

ARTICLE 16 – DISPUTE RESOLUTION

16.01 *Methods and Procedures*

A. Either Owner or Contractor may request mediation of any Claim submitted to Engineer for a decision under Paragraph 10.05 before such decision becomes final and binding. The mediation will be governed by the Construction Industry Mediation Rules of the American Arbitration Association in effect as of the Effective Date of the Agreement. The request for mediation shall be submitted in writing to the American Arbitration Association and the other party to the Contract. Timely submission of the request shall stay the effect of Paragraph 10.05.E.

B. Owner and Contractor shall participate in the mediation process in good faith. The process shall be concluded within 60 days of filing of the request. The date of termination of the mediation shall be determined by application of the mediation rules referenced above.

C. If the Claim is not resolved by mediation, Engineer's action under Paragraph 10.05.C or a denial pursuant to Paragraphs 10.05.C.3 or 10.05.D shall become final and binding 30 days after termination of the mediation unless, within that time period, Owner or Contractor:

1. elects in writing to invoke any dispute resolution process provided for in the Supplementary Conditions; or

2. agrees with the other party to submit the Claim to another dispute resolution process; or

3. gives written notice to the other party of the intent to submit the Claim to a court of competent jurisdiction.

ARTICLE 17 – MISCELLANEOUS

17.01 *Giving Notice*

A. Whenever any provision of the Contract Documents requires the giving of written notice, it will be deemed to have been validly given if:

Copyright © 2007 National Society of Professional Engineers for EJCDC. All rights reserved.

1. delivered in person to the individual or to a member of the firm or to an officer of the corporation for whom it is intended; or

2. delivered at or sent by registered or certified mail, postage prepaid, to the last business address known to the giver of the notice.

17.02 *Computation of Times*

A. When any period of time is referred to in the Contract Documents by days, it will be computed to exclude the first and include the last day of such period. If the last day of any such period falls on a Saturday or Sunday or on a day made a legal holiday by the law of the applicable jurisdiction, such day will be omitted from the computation.

17.03 *Cumulative Remedies*

A. The duties and obligations imposed by these General Conditions and the rights and remedies available hereunder to the parties hereto are in addition to, and are not to be construed in any way as a limitation of, any rights and remedies available to any or all of them which are otherwise imposed or available by Laws or Regulations, by special warranty or guarantee, or by other provisions of the Contract Documents. The provisions of this Paragraph will be as effective as if repeated specifically in the Contract Documents in connection with each particular duty, obligation, right, and remedy to which they apply.

17.04 *Survival of Obligations*

A. All representations, indemnifications, warranties, and guarantees made in, required by, or given in accordance with the Contract Documents, as well as all continuing obligations indicated in the Contract Documents, will survive final payment, completion, and acceptance of the Work or termination or completion of the Contract or termination of the services of Contractor.

17.05 *Controlling Law*

A. This Contract is to be governed by the law of the state in which the Project is located.

17.06 *Headings*

A. Article and paragraph headings are inserted for convenience only and do not constitute parts of these General Conditions.

Copyright © 2007 National Society of Professional Engineers for EJCDC. All rights reserved.

SECTION 4
SUPPLEMENTARY CONDITIONS

SUPPLEMENTARY CONDITIONS

These Supplementary Conditions amend or supplement the Standard General Conditions of the Construction Contract (EJCDC C-700, 2007 ed.) and other provisions of the Contract Documents as indicated below. All provisions which are not so amended or supplemented herein or in the Specific Project Requirements remain in full force and effect.

SC-1.01 The terms used in these Supplementary Conditions which are defined in the General Conditions have the meaning assigned to them in the General Conditions.

SC-2.02 Delete paragraph 2.02A in its entirety and insert the following in its place:

Owner shall furnish one (1) printed/hard copy of the drawings and Project Manual which shall be an executed contract set and one set in electronic format (.pdf), if requested.

SC-2.03 In the last sentence of 2.03A, change "sixtieth day" to "ninetieth day."

SC-4.02(A) Change "Supplementary Conditions" to read "Specific Project Requirements."

SC-5.03(A)(1) The required Certificate of Insurance shall be in a form satisfactory to the Owner (most current version of ACORD 25 or approved equal). If the Contractor fails to procure and maintain any specified and/or required insurance, the Owner shall have the right to procure and maintain the said insurance for and in the name of the Contractor and the Contractor shall pay the cost thereof and shall furnish all necessary information to make effective and maintain such insurance.

SC-5.04(B)(1) Change "Supplementary Conditions" to read "Specific Project Requirements."

SC-5.04(B)(2) The limits of liability for the insurance required by paragraph 5.04(A) of the General Conditions shall provide coverage for not less than the following amounts or greater where required by Laws and Regulations:

5.04(A)(1) and (2) Workers' Compensation, etc., under paragraphs 5.04(A)(1) and 5.04(A)(2) of the General Conditions:

(a)	State	Statutory
(b)	Applicable Federal (e.g., Longshoreman's):	Statutory
(c)	Employer's Liability:	$1,000,000

5.04(A)(3), (4) and (5). Contractor's Liability Insurance under paragraphs 5.04(A)(3) through 5.04(A)(5) of the General Conditions which shall also include completed operations and product liability coverage.

(a) Bodily Injury and Property Damage, Combined Single Limit (CSL) (Except Products and Completed Operations) Property Damage liability

insurance will provide Explosion, Collapse, and Underground coverage where applicable.

Each Occurrence	$2,000,000*
General Aggregate	$4,000,000*

(b) Products and Completed Operations Aggregate $1,000,000

Products and Completed Operations to be maintained for two (2) years after final payment and Contractor shall continue to provide evidence of such coverage to the Owner on an annual basis during the aforementioned period.

(c) Personal and Advertising Injury (Per Person/Organization and per occurrence) with Employment Exclusion deleted. $1,000,000

(d) Fire Damage $100,000

(e) *Umbrella Excess Liability – As needed to increase primary policy to required limits.

(f) If the General Liability Policy includes a General Aggregate, such policy shall be endorsed to have General Aggregate apply <u>to this project only</u> (Per Project Aggregate Limit).

5.04(A)(6) Automobile Liability - (Owned, Non-Owned, Hired)
Contractor may provide split limits or combined single limit.

(a) Split Limits:

Bodily Injury,	Each Person:	$2,000,000
	Each Occurrence	$2,000,000
Property Damage,	Each Occurrence	$1,000,000

or

(b) Combined Single Limit

Bodily Injury and Property Damage,
Each Occurrence $2,000,000

(c) Umbrella Excess Liability – as needed to increase Primary Policy to specified limits.

SC-5.04(B)(3) Add the following to the end of the paragraph: “to the extent available in the insurance industry with industry standard exclusions and as allowed under the laws and regulations in the State of Ohio;”

SC-5.04(B)(4) Add the following:

Written notice of cancellation for non-payment of premium shall be at least 10 days.

Add the following paragraphs:

SC-5.04(C) Unless otherwise stated in Specific Project Requirements, the Contractor shall purchase and provide an "Owner's and Contractor's Protective Policy" with the Owner listed as the insured for the following limits:

Each Occurrence	$1,000,000
General Aggregate	$2,000,000

SC-5.04(D) Unless otherwise stated in Specific Project Requirements the Contractor shall purchase and maintain during the Contract Time "All Risk Builders' Risk Insurance," and/or "Installation Floater Insurance," and/or "Boiler and Machinery Insurance," and any and all insurance requirements of section GC-5.06 of the General Conditions as applicable for the type of work to be performed upon the Project to the full insurable value thereof for the benefit of the Owner, the Contractor, Subcontractors and Suppliers as their interest may appear. This insurance shall cover the work until final acceptance and final payment by the Owner. This provision shall in no way release the Contractor or Contractor's Surety from obligations under the Contract Documents to fully complete the Project. The original policy(s) shall be filed with the Owner or his designated representative.

SC-5.05 *Owner’s Liability Insurance*

See SC-5.04(C) above.

SC-5.06 *Property Insurance*

Unless otherwise stated in Specific Project Requirements the Contractor, not the Owner, shall purchase and maintain during the Contract Time all property insurance required in section GC-5.06 of the General Conditions and as outlined in SC-5.04(D) above.

SC-6.02(C) Add the following Paragraph:

The Contractor shall be responsible for the Owner and/or Engineer's additional inspection and administrative costs for work performed beyond regular working hours as defined in this Section.

SC-6.10(B) Add the following:

Should the Owner be exempt from Ohio State Sales and Use Taxes on materials and equipment to be incorporated in the Project, the Contractor may obtain a waiver and said taxes shall not be included in the Contract Price.

1. Owner will furnish the required certificates of tax exemption to Contractor for use in the purchase of supplies and materials to be incorporated into the work
2. Owner's exemption to Contractor does not apply to construction tools, machinery, equipment, or other property by or leased by Contractor, or to supplies or materials not incorporated into the work.

The Contractor shall withhold and/or pay all consumer, use, property, employment, income and other taxes in accordance with the laws and regulations of the United States, State of Ohio and Owner which are applicable during the performance of the work.

SC 6.17 *Shop Drawings and Samples*

Add the following new paragraphs immediately after paragraph 6.17E:

F. Contractor shall furnish required submittals with sufficient information and accuracy in order to obtain required approval of an item with no more than three (3) submittals. Engineer will record Engineer's time for reviewing subsequent materials of shop drawings, samples, or other items requiring approval and Contractor shall reimburse Owner for Engineer's charges for such time.

G. In the event that Contractor requests a substitution for a previously approved item, Contractor shall reimburse Owner for Engineer's charges for such time unless the need for such substitution is beyond the control of the Contractor.

SC-7.02 Delete Section 7.02 of the General Conditions in its entirety and insert the following:

SC-7.02(A) The General Construction Contractor shall be referred to and defined as the Construction Coordinator.

SC-7.02(B) Duties of the Construction Coordinator include the following:

1. Scheduling and coordinating the work of the Prime Contractors including submission and periodic updating of project schedule.

2. Establishing and administrating the site safety program and procedures for the project.

3. See that permits are applied for and obtained on a timely basis. Advise

the Engineer of any problems related to permit approval.

4. Monitoring compliance with Laws and Regulations.

5. Maintain project site for dust, sedimentation, debris, waste, and general site cleanliness.

6. Coordinate location and use of temporary construction facilities including but not limited to sanitary, water, power, telephone, and parking.

7. Coordinate Owner interface for utility tie-ins/shut downs.

8. Monitor shop drawing submittal and coordination of submittal information between Prime Contractors.

SC-11.01(A) For purposes of "Cost of the Work" delete Section 11.01(A), (B), and (C) of the General Conditions in their entirety and insert ODOT 109.05, current edition in its place.

SC-13.07 (A) In the First sentence of Section 13.07(A) remove "Substantial Completion" and insert "Final Acceptance of the entire project and final payment by the Owner."

SC-13.07(C) Remove 13.07(C) and replace with the following:

All materials and equipment shall be warranted by the respective material supplier or equipment manufacturer until the end of the Contractor's "correction period" (or longer if specified elsewhere in the contract) regardless of date of initial installation or operation of the material or equipment. The cost of such extended warranties as needed from material suppliers or equipment manufacturers to provide warranty coverage until the end of the "correction period" or other period as specified in the contract shall be the responsibility of the prime contractor and shall be assumed to have been included in his bid.

SC-14.02 (A) (3) Delete Section 14.02(A) (3) of the General Conditions in its entirety and insert the following:

Until the job is 50% complete, the Contractor will be paid 92% of the estimated value of labor and material completed in acceptable form. After the work is 50% complete, no further funds shall be retained and the Contractor shall be paid 100% of the estimated value of labor and material completed in acceptable form, provided that the Contractor is making satisfactory progress and there is no specific cause for greater withholding. Upon the Owner’s agreement that the project is substantially complete, the Retainage may be reduced to twice the value of the remaining punch list work subject to the recommendation of the Engineer and the approval by the Owner.

SC-14.02(A) (4) Add the following paragraph:

Payment for stored materials at invoice prices or at the unit price bid for materials, or the lesser value of the two, will be made for accepted nonperishable equipment and materials which are to be incorporated into the work, when accepted, delivered, properly stored, and protected upon the site and verified to the Engineer by a copy of the invoice. For materials and equipment meeting the foregoing conditions, the Owner will pay, when properly included in an approved estimate, 92% of the invoice value of the same. Subsequent to the inclusion of a payment for delivered materials in a progress payment, Contractor shall submit no later than the next payment submission, a partial waiver of lien from each and every supplier for whom delivered materials were paid. If no such waiver is submitted prior to or along with the next payment, the amount of delivered materials paid commensurate with that particular item will be deducted from future payments. No payment for delivered materials shall be made for any items that are scheduled to be incorporated in the work within 30 days of submission of the pay estimate. Delivered materials will not be paid in any given month for a total amount less than $5,000.00. Payment for delivered materials for such items as pipe backfill and roadway subbase will not be routinely considered.

SC-16.01 Delete Article 16 in its entirety and replace with the following:

2/11

ARTICLE 16 - DISPUTE RESOLUTION AGREEMENT - MEDIATION/ARBITRATION

OWNER and CONTRACTOR hereby agree that Article 16 of the General Conditions to the Agreement between OWNER and CONTRACTOR is amended to include the following agreement of the parties:

16.01 All claims, disputes, and other matters in question between OWNER and CONTRACTOR arising out of or relating to the Contract Documents or the breach thereof (except for claims which have been waived by the making or acceptance of final payment as provided by paragraph 14.09) will be decided by arbitration in accordance with the Construction Industry Arbitration Rules of the American Arbitration Association then obtaining, subject to the limitations of this Article 16. This agreement so to arbitrate and any other agreement or consent to arbitrate entered into in accordance herewith as provided in this Article 16 will be specifically enforceable under the prevailing law of any court having jurisdiction.

16.02 No demand for arbitration of any claim, dispute, or other matter that is required to be referred to Engineer initially for decision in accordance with paragraph 9.09 will be made until the earlier of (a) the date on which ENGINEER has rendered a written decision or (b) the thirty-first day after the parties have presented their evidence to ENGINEER if a written decision has not been rendered by ENGINEER before that date. No demand for arbitration of any such claim, dispute or other matter will be made later than thirty days after the date on which ENGINEER has rendered a written decision in respect thereof in accordance with paragraph 9.08 and the failure to demand arbitration within said thirty days' period will result in Engineer’s decision being final and binding upon OWNER and CONTRACTOR. If ENGINEER renders a decision after arbitration proceedings have been initiated, such decision may be entered as evidence but will not supersede the arbitration proceedings, except where the decision is acceptable to the parties concerned. No demand for arbitration of any written decision of ENGINEER rendered in accordance with paragraph 9.08 will be made later than ten days after the part making such demand has delivered written notice of intention to appeal as provided in paragraph 10.05.

16.03 Notice of the demand for arbitration will be filed in writing with the other party to the Agreement and with the American Arbitration Association, and a copy will be sent to ENGINEER for information. The demand for arbitration will be made within the thirty-day or ten-day period specified in paragraph 16.02 as applicable, and in all other cases within a reasonable time after the claim, dispute or other matter in question has arisen, and in no event shall any such demand be made after the date when institution of legal or equitable proceedings based on such claim, dispute or other matter in question would be barred by the applicable statute of limitations.

16.04 Except as provided in paragraph 16.05 below, no arbitration arising out of or relating to the Contract Documents shall include by consolidation, joiner or in any other manner any other person or entity (including ENGINEER, ENGINEER's Consultant, and the officers, directors, agents, employees, or consultants of any of them) who is not a party

to this contract unless:

(A) the inclusion of such other person or entity is necessary if complete relief is to be afforded among those who are already parties to the arbitration, and

(B) such other person or entity is substantially involved in a question or law or fact which is common to those who are already parties to the arbitration and which will arise in such proceedings, and

(C) the written consent of the other person or entity sought to be included and of OWNER and CONTRACTOR has been obtained for such inclusion, which consent shall make specific references to this paragraph; but no such consent shall constitute consent to arbitration of any dispute not specifically described in such consent or to arbitration with any party not specifically identified in such consent.

16.05 Notwithstanding paragraph 16.04 if a claim, dispute or other matter in question between OWNER and CONTRACTOR involves the Work of a Subcontractor, either OWNER or CONTRACTOR may join such Subcontractor as a party to the arbitration between OWNER and CONTRACTOR herein under. CONTRACTOR shall include in all subcontracts required by paragraph 6.06(G) a specific provision whereby the Subcontractor consents to being joined in an arbitration between OWNER and CONTRACTOR involving the Work and such Subcontractor. Nothing in this paragraph 16.05 nor in the provision of such subcontract consenting to joinder shall create any claim, right or cause of action in favor of Subcontractor and against OWNER, ENGINEER, or ENGINEER's Consultants that does not otherwise exist.

16.06 The award rendered by the arbitration will be final, judgment may be entered upon it in any court having jurisdiction thereof, and it will not be subject to modification or appeal.

16.07 OWNER and CONTRACTOR agree that they shall first submit any and all unsettled claim, counterclaims, disputes and other matters in questions between them arising out of or relating to the Contract Documents or the breach thereof ("disputes"), to mediation by the American Arbitration Association under the Construction Industry Mediation Rules of the American Arbitration Association prior to either of them initiating against the other a demand for arbitration pursuant to paragraphs 16.01 through 16.06, unless delay in initiating arbitration would irrevocably prejudice one of the parties. The respective thirty and ten day time limits within which to file a demand for arbitration as provided in paragraphs 16.02 and 16.03 above shall be suspended with respect to a dispute submitted to mediation within those same applicable time limits and shall remain suspended until ten days after the termination of the mediation. The mediator of any dispute submitted to mediation under this Agreement shall not serve as arbitrator of such dispute unless otherwise agreed.

ARTICLE 16 - DISPUTE RESOLUTION AGREEMENT - JUDICIAL SYSTEM

OWNER and CONTRACTOR hereby agree that Article 16 of the General Conditions to the Agreement between OWNER and CONTRACTOR is amended to include the following agreement of the parties:

16.01 All claims, disputes and other matters in question between Owner and Contractor arising out of or relating to the Contract Documents or the breach thereof (except for claims which have been waived by the making or acceptance of final payment as provided by Paragraph 14.09) will be decided through the _____County Court of Common Pleas. Arbitration will be entered into only if agreed upon in writing by both parties.

SECTION 5
SPECIFICATIONS

SECTION 01010 - SUMMARY OF WORK

PART 1 - GENERAL

1.1 LOCATION OF THE PROJECT

A. The project is located in the City of Mentor along various streets. Streets to be included in this year's program are Agard Court, Barkwood Court, Champaign Drive, Commerce Drive, Dartmoor Road, East Avenue, Eastmoor Road, Edgehill Road, Enterprise Drive, Heather Hill Drive, Hollycroft Lane, Lupine Drive, Marion Drive, Market Street, Monroe Court, Nearing Circle, Oakdale Road, Olde Farm Lane, Pekin Court, Rutland Drive, Spinach Drive, Villa Marina Court, Welk Court and White Oak Drive.

1.2 PROJECT DESCRIPTION

A. The project consists of two contracts. The bidder may bid on a single contract or all contracts. Contractor must bid on all alternates associated with the specific contract.

B. Contract A – Asphalt Pavement Planing and Asphalt Resurfacing consists of full depth asphalt repair as directed and milling and resurfacing of select streets by the Contractor's forces. Streets for milling and resurfacing operations include Champaign Drive, East Avenue, Eastmoor Road, Edgehill Road, Hollycroft Lane, Lupine Drive, Marion Drive, Market Street, Nearing Circle, Oakdale Road, Rutland Drive and White Oak Drive. Contractor shall grind a butt joint at each end of these streets for blending in the overlay. Work on various streets may be impacted by the installation of water lines by Aqua Ohio. A schedule of streets Aqua Ohio may be working on will be provided at the preconstruction meeting to allow for coordination between the Contractor and Aqua Ohio.

C. Contract B – Concrete Pavement Repairs consists of Full Depth Removal and Replacement for pavement slabs, box outs, and joints with ODOT Class QC MS concrete on Agard Court, Barkwood Court, Commerce Drive, Dartmoor Road, Enterprise Drive, Heather Hill Drive, Monroe Court, Olde Farm Lane, Pekin Court, Spinach Drive, Villa Marina Court and Welk Court. Concrete thickness is assumed to be approximately 6" to 9" on all streets. The alternate bid for this contract shall include quantity for complete slab replacement and/or joint repairs to be used on the above streets or other streets as determined by the City of Mentor Engineer's office.

1.3 SPECIFICATIONS

A. In general, these Specifications describe the work to be performed by the various trades, other than work specifically excluded. It shall be the responsibility of Contractors and Subcontractors to perform all work incidental to their trade, whether or not specific mention is made of each item, unless such incidentals are included under another Item.

B. It is advised that all Contractors and Subcontractors familiarize themselves with the contents of the complete Specifications, particularly for the trades preceding, following, related or adjacent to their work.

1.4 DRAWING SCHEDULE

A. The work to be done under these Contracts is shown on the attached quantity summary sheets and/or the drawings in Section 9.

END OF SECTION 01010 (12/8/14)

QUANTITY WORKSHEET

For 2016 Pavement Repair Program - CONTRACT A (1 1/2" Asphalt Pavement Planing/3" Asphalt Resurfacing(Market, East, Rutland, Lupine, Champaign, White Oak); 1.5" planing/resurfacing (all other streets))

REF. NO.	DESCRIPTION	ESTIMATED TOTAL QTY.	MEASURE UNITS	MARKET CENTER TO ASPHALT	EAST AVE STATION TO CURVE(6612)	RUTLAND ST JAMES TO DURHAM	LUPINE RUTLAND TO PALMERSTON	CHAMPAIGN CAMELOT TO CUL DE SAC AREA	WHITE OAK HENDRICKS TO MARJORY	NEARING CIRCLE HILLTOP TO MARJORY	HOLLYCROFT MENTOR AVE TO CONCRETE	EASTMOOR CROSSFIELD TO JOHNNYCAKE	OAKDALE EDGEWOOD TO SOUTH	EDGEHILL HOPKINS TO LITTLE MTN	MARION MENTOR AVE TO SOUTH
1	(253) PAVEMENT REPAIR, AS PER PLAN	1,500.00	SQ YD												
2	(251) 3 INCH PARTIAL DEPTH PAVEMENT REPAIR, AS PER PLAN	3,074.00	SQ YD	490	425	690	255	514	700						
3	(254) PAVEMENT PLANING, BITUMINOUS, AS PER PLAN	24,223.00	SQ YD	118						1,875	6,515	3,550	3,670	6,825	1,670
4	(254) PAVEMENT PLANING, PORTLAND CEMENT CONCRETE, AS PER PLAN	10,267.00	SQ YD	1,067.0	1,865.0	1,483.0	1,032.0	1,657.0	3,163.0						
5	(407) TACK COAT, TRACKLESS, 702.13	4,873.40	GALLON	363.0	429.5	540.0	187.0	359.4	584.0	187.5	651.5	355.0	367.0	682.5	167.0
6	(407) TACK COAT, TRACKLESS, FOR INTERMEDIATE COURSE	1,231.45	GALLON	181.5	214.8	270.0	93.5	179.7	292.0						
7	(448) ASPHALT CONCRETE INTERMEDIATE COURSE, TYPE 1, PG64-22	1,026.21	CU YD	151.25	178.96	225.00	77.92	149.75	243.33						
8	(448) ASPHALT CONCRETE SURFACE COURSE, TYPE 1, PG64-22	2,030.58	CU YD	151.25	178.96	225.00	77.92	149.75	243.33	78.13	271.46	147.92	152.92	284.38	69.58
9	(SPEC) HYBRID INTERLAYER PAVING MAT, GLASPAVE 25, AS PER PLAN	24,629.00	SQ YD	3630.00	4295.00	5400.00	1870.00	3594.00	5840.00						
10	(604) MANHOLE/INLET BASIN ADJUSTED TO GRADE	56.00	EACH	9	8	11	6	9	13						
11	(604) MONUMENT BOX ADJUSTED TO GRADE, AS PER PLAN	29.00	EACH	3	5	8	2	4	7						
12	(632) DETECTOR LOOP, QUADRUPOLE, 6' X 30'	5.00	EACH	3							2				
13	(642) CROSSWALK LINE	457.00	L.F.	132					110		145			15	55
14	(642) STOP LINE	144.00	L.F.	39	19			24	18		20			13	11
15	(642) CHANNEL LINE	546.00	L.F.	506							40				
16	(642) CENTER LINE	0.51	MILE	0.22	0.26						0.03				
17	(642) ARROW	8.00	EACH	6							2				
18	(642) ONLY	5.00	EACH	4							1				
19	(SPC) BONDS AND INSURANCES, AS PER PLAN	1	LUMP												
20	(SPC) PRE-CONSTRUCTION VIDEO, AS PER PLAN	1	LUMP												
21	(614) MAINTAINING TRAFFIC	1	LUMP												
22	(624) MOBILIZATION	1	LUMP												
23	CONTINGENCY	1	LUMP												

QUANTITY WORKSHEET

For 2016 Pavement Repair Program - CONTRACT A - ALTERNATE 1 (Comcord, Conover & Dalton 1.5" mill/fill)

REF. NO.	DESCRIPTION	ESTIMATED TOTAL QTY.	MEASURE UNITS	CONCORD CUMBERLAND TO CAMBRIDGE PARK	CONOVER CAMBRIDGE PARK TO WEST	DALTON CAMBRIDGE PARK TO WEST
1	(253) PAVEMENT REPAIR, AS PER PLAN	230.00	SQ YD			
2	(254) PAVEMENT PLANING, BITUMINOUS, AS PER PLAN	4,580.00	SQ YD	1,825	1,345	1,410
3	(407) TACK COAT, TRACKLESS, 702.13	458.00	GALLON	182.5	134.5	141.0
4	(441) ASPHALT CONCRETE SURFACE COURSE, TYPE 1, (448), PG64-22	190.83	CU YD	76.04	56.04	58.75

QUANTITY WORKSHEET

For 2016 Pavement Repair Program - CONTRACT B (CONCRETE PAVEMENT REPAIRS - Estimated 6" TO 9" thickness)

REF. NO.	DESCRIPTION	ESTIMATED TOTAL QUANTITY	MEASURE UNITS	AGARD	COMMERCE, DARTMOOR, ENTERPRISE, SPINACH	MONROE, OLDE FARM	BARKWOOD, HEATHER HILL, PEKIN, VILLA MARINA, WELK
1	(255) FULL DEPTH PAVEMENT REMOVAL AND RIGID REPLACEMENT, CLASS QC MS, AS PER PLAN	3,400.00	SQ YD	310	1,520	440	1130
2	(SPC) BONDS AND INSURANCES, AS PER PLAN	1	LUMP				
3	(614) MAINTAINING TRAFFIC	1	LUMP				
4	CONTINGENCY	1	LUMP				

QUANTITY WORKSHEET

For 2016 Pavement Repair Program - CONTRACT B - ALTERNATE 1 (FULL SLAB/ADDITIONAL JOINT REPAIR)

REF. NO.	DESCRIPTION	ESTIMATED TOTAL QUANTITY	MEASURE UNITS
1	(255) FULL DEPTH PAVEMENT REMOVAL AND RIGID REPLACEMENT, CLASS QC MS, AS PER PLAN	750.00	SQ YD

SECTION 01020 - GENERAL REGULATIONS AND PERMITS

PART 1 - GENERAL

1.1 REGISTRATION

The Prime Contractor(s) and all subcontractors shall be registered with the Owner's Building Department. Registration shall include completing required forms, providing a certificate of liability insurance, and a One Hundred Dollar ($100.00) registration fee.

If the Contractor performs any work within the municipal limits outside the performance of this contract, he shall provide a separate Ten Thousand Dollar ($10,000.00) registration bond.

If the contractor performs work only within this contract, he may submit the Contract Performance Bond in lieu of a Ten Thousand Dollar ($10,000.00) registration bond.

1.2 PERMITS

The General Contractor shall apply for all building or right of way permits from the Owner or other authorities. Permit and inspection fees payable to the Owner will be waived unless otherwise stated in the specifications. The contractor shall compensate the City for any inspection services occurring outside the normal City business hours of 8 AM to 5 PM Monday through Friday at a rate of $60 per hour. All permit and inspection fees required by other authorities shall be paid for by the General Contractor.

1.3 ARCHAEOLOGICAL DISCOVERIES

Contractors and subcontractors are required under O.R.C. Section 149.53, to notify the Ohio Historical Society and the Ohio Historic Site Preservation Board of Archaeological Discoveries located in the project area, and to cooperate with those entities in archaeological and historic surveys and salvage efforts if such discoveries are uncovered within the project area.

Contact: Ohio Resource Protection and Review
Attn.: Mr. Mark Epstein, Director
567 East Hudson Street
Columbus, Ohio 43211

Should archaeological discoveries or other activities delay progress of the work, an adjustment in contract time will be made.

END OF SECTION 01020 (2/3/12)

SECTION 01021 - INDUSTRY STANDARDS

PART 1 - GENERAL

1.1 ABBREVIATIONS

A. Abbreviations, as used, designate the following:

AASHTO	-	American Association of State Highway and Transportation Officials
ACI	-	American Concrete Institute
AIEE	-	American Institute of Electrical Engineers
AISC	-	American Institute of Steel Construction
ANSI	-	American National Standards Institute
ASTM	-	American Society of Testing and Materials
AWWA	-	American Water Works Association
CMS	-	Construction and Material Specifications
NEMA	-	National Electrical Manufacturers Association
ODOT	-	Ohio Department of Transportation
ORC	-	Ohio Revised Code
UL	-	Underwriters Laboratories, Inc.

1.2 REFERENCE TO OTHER SPECIFICATIONS

A. Where reference is made to specifications such as ASTM, AWWA or AASHTO, the latest edition shall be used, unless otherwise noted on the plans or in the specifications.

1.3 CODES AND STANDARDS

A. All work provided for by these specifications must be installed according to the provisions of the State and local building codes, subject to inspection and acceptance by the State and local inspectors.

END OF SECTION 01021 (10/93)

SECTION 01032 - PROJECT MEETINGS

PART 1 - GENERAL

1.1 PRECONSTRUCTION MEETING

A. Prior to the Contractor beginning any work on the project, the Owner will schedule and hold a preconstruction meeting to discuss all aspects of the contract work.

B. The Contractor shall be present and be prepared to comment in detail on all aspects of his work.

C. The Contractor shall bring to the preconstruction meeting a proposed construction progress schedule, erosion control plan, quality control program, concrete mix designs, asphalt mix designs (JMF), etc. Approval of each by the Engineer is required prior to the start of any work.

D. Included in the construction progress schedule shall be an implementation sequence of the proposed erosion control efforts required by the contract.

END OF SECTION 01032 (04/00)

SECTION 01033 - SURVEYS, LAYOUTS AND LEVELS

PART 1 - GENERAL

1.1 REFERENCE POINTS

A. The Contractor shall provide engineering surveys for construction to establish reference points which in his judgment are necessary to enable the Contractor to proceed with the work. The Contractor shall be responsible for surveying and laying out the work and shall protect and preserve the established reference points and shall make no changes or relocations without the prior written approval of the Engineer. He shall report to the Engineer whenever any reference point is lost or destroyed or requires relocation because of necessary changes in grades or locations. The Contractor shall replace and accurately relocate all reference points so lost, destroyed or moved.

1.2 LAYOUT OF WORK

A. The Contractor shall lay out his work and be responsible for correct locations, elevations and dimensions of all work executed by him under this Contract. The Contractor must exercise proper precautions to verify the figures shown on the Drawings before laying out the work and will be held responsible for any error resulting from his failure to exercise such precaution. The Contractor shall employ a competent surveyor to establish lines and grades to insure the new construction aligns with any existing work.

END OF SECTION 01033 (07/00)

SECTION 01034 - CONTRACTOR'S USE OF SITE

PART 1 - GENERAL

1.1 GENERAL

A. The Contractor will be allowed the use of as much of the site designated for the improvements as is necessary for his operation.

1.2 USE OF STREETS

A. During the progress of the work, the Contractor shall make ample provisions for both vehicle and pedestrian traffic on any public street and shall indemnify and save harmless the Owner from any expense whatsoever due to his operations over said streets. The Contractor shall also provide free access to all the fire hydrants, water, and gas valves located along the line of his work. Gutters and waterways must be kept open or other provisions made for the removal of storm water. Street intersections may be blocked only one-half at a time, and the Contractor shall lay and maintain temporary driveways, bridges and crossings, such as in the opinion of the Engineer are necessary to reasonably accommodate the public.

B. In the event of the Contractor's failure to comply with these provisions, the Owner may cause the same to be done, and may deduct the cost of such work from any monies due the Contractor under this Agreement, but the performance of such work by the Owner at its instance shall serve in no way to release the Contractor from his general or particular liability for the safety of the public or the work.

C. The Contractor shall repair at no cost to the Owner, all existing roads, parking areas, grassed areas that are damaged due to the execution of his work. The Contractor shall remove daily all mud, soil and debris that may be tracked onto existing streets, drives, or walks by his equipment or that of subcontractors or suppliers.

1.3 CLOSING STREETS TO TRAFFIC

The Contractor may (under special circumstances) with the approval of the Engineer, close streets, or parts of streets, to vehicular traffic. The streets are to remain closed as long as the construction work or the condition of the finished work requires or as determined by the Engineer. The Engineer shall be the judge of how many streets or parts of streets it is necessary for the Contractor to close at any time, and may refuse to permit the closing of additional streets to traffic until the majority of the work on the closed streets is completed and they are opened to traffic.

1.4 RIGHTS-OF-WAY

A. Whenever it is required to perform work within the limits of public or private property or in rights-of-way, such work shall be done in conformity with all agreements between

the Owner and the owners of such. Care shall be taken to avoid injury to the premises entered, which premises shall be left in a neat and orderly condition by the removal of rubbish and the grading of surplus materials, and the restoration of said public or private property to the same general conditions as pertained at the time of entry for work to be performed under this contract.

B. The Contractor shall not (except after consent from the proper parties) enter or occupy with men, tools or equipment, any land outside the rights-of-way or property of the Owner.

C. When the Contractor performs construction within 10 ft. of a right-of-way or easement line, he shall place tall stakes properly identified at points of change in width or direction of the right-of-way or easement line and at points along the line so that at least two stakes can be seen distinctly from any point on the line.

1.5 EASEMENTS

A. Where the work is to be constructed upon easements, such easements will be secured by the Owner without cost to the Contractor. The Contractor shall not enter upon or occupy any private property outside of the limits of the easements furnished.

B. Care shall be taken to avoid injury to the premises entered, which premises shall be left in a neat and orderly condition by the removal of rubbish and the grading of surplus materials, and the restoration of said public or private property to the same general conditions as pertained at the time of entry for work to be performed under this contract.

1.6 PROTECTING EXISTING BUILDINGS, STRUCTURES AND ROADWAYS

A. The Contractor shall, at his own expense, shore up and protect any buildings, roadways, utilities or other public or private structures which may be encountered or endangered in the prosecution of the work, and that may not be otherwise provided for, and he shall repair and make good any damages caused to any such property by reason of his operations. All existing fences removed due to the prosecution of the work shall be replaced by the Contractor. No extra payment will be made for said work or material, but the cost of this work must be included in the price stipulated for the work to be done under this contract.

1.7 SITE FACILITIES

A. The Contractor shall furnish and place sufficient quantities of portable toilet facilities at locations convenient for use by the Contractor's personnel, Subcontractors, the Engineer, and the Owner.

1.8 RESTORATION

A. On all contract items that require and include surface restoration including repairs to driveways and roads outside trench limits, an amount equal to 10% of the unit price bid for sewer and/or waterline items will be considered the value of this work.

B. As work is completed the payment for each contract item will be reduced by the 10% until full performance of all contract requirements.

C. Partial release of the 10% restoration money may be made by the Engineer commensurate with his determination of the value of said work.

D. If in the opinion of the Engineer, the value of the restoration exceeds 10% of the contract line item, he may require a greater amount to be held but not in excess of 25%.

E. The amount held for restoration shall not be considered retainage of completed work but rather the value of work not yet performed and therefore not eligible for payment.

F. On lump sum items or contracts, the value of the restoration work will be determined by the approved schedule of values submitted by the Contractor.

END OF SECTION 01034 (5/03)

SECTION 01035 - PROGRESS SCHEDULE

PART 1 - GENERAL

1.1 PROGRESS SCHEDULE

A. Immediately after signing the Contract, the General Construction Contractor shall prepare a graphic progress schedule, indicating the work to be executed during each month and the rate of expected progress to secure completion on the agreed-upon completion date. The progress schedule shall be approved by the Engineer and Owner prior to starting work on the site. Copies of such graphic progress charts, upon which has been indicated the actual progress, shall be furnished to the Engineer with each requisition for payment.

B. Should the rate of progress fall materially behind the scheduled rate of progress, and unless the delay is authorized by the Engineer, each offending Contractor shall furnish additional labor, work overtime, or take other necessary means required for completion of the work on the scheduled date. No additional compensation beyond the set Contract price shall be paid for action taken or overtime expense incurred in maintaining scheduled progress.

END OF SECTION 01035 (10/98)

SECTION 01038 - SAMPLING AND TESTING

PART 1 - GENERAL

1.1 QUALITY CONTROL

A. The Contractor shall be responsible for the quality of all materials incorporated into the project work and shall be responsible for all costs of testing and certification of same.

B. The Contractor shall provide the Engineer with a Quality Control Plan in which his testing methods/procedures are defined. Said Plan shall meet with the approval of the Engineer and include identification of laboratories, types of testing, and the tentative amount and scheduling of each.

All certifications of tests and/or gradations for materials to be utilized in the work and all quality control testing shall be performed by an independent laboratory (not affiliated with, owned by, or managed by the Contractor). The laboratory shall be accredited by the AASHTO Materials Reference Laboratory for the type of testing performed.

C. The Owner may perform field Quality Assurance testing; however, such testing shall not relieve the Contractor from the responsibility of Quality Control testing or from supplying certificates from manufacturers or suppliers to demonstrate compliance with the specifications. It is intended that the testing by the Contractor and the Owner be complimentary toward a quality project; however, the Contractor may not assume the Owner will test or that any tests will be done in lieu of the Contractor's own Quality Control testing. In the same sense, the Contractor may not rely on Owner Quality Assurance testing as a basis of acceptance or approval of his work nor may any Owner performed testing be reflected in his submitted plan.

1.2 TEST CRITERIA

A. The following tests at a minimum shall be included with the Contractor’s Quality Control Plan in accordance with the specifications:

1. Aggregates

   a. For each material and/or different source, the laboratory shall perform soundness, gradation, and other tests for all parameters specified. Aggregates incorporated into concrete or asphalt mixes shall also be tested for moisture content daily.

2. Compaction Tests

   a. Compaction tests or field density tests shall be taken on all embankment, trench backfill, subgrade, and subbase materials in accordance to ODOT 203 or 02300AIA if applicable.

b. Minimum testing shall be as follows:
Embankment testing shall be at least one (1) test/5000 S.F. of each lift;
Trench backfill testing shall be at least one (1) test/50 L.F. of each lift;
Subgrade and/or subbase testing shall be at least one (1) test/200 L.F. of pavement or /5000 S.F. of slabs; subject to greater frequency due to soil conditions or Engineer's direction.

c. Proctors or relative density tests shall be performed as often as necessary for the differing soils or granular materials utilized. Proctors shall be run with a minimum of 5 points. Test reports shall show the wet (bulk) weight, dry weight, wet (bulk) density, dry density, moisture content weight and moisture content percentage. Both the dry curve and the wet curve shall be plotted.

3. Concrete Mix Design

a. For each type of concrete, the laboratory shall perform the necessary mix design providing all test data as required by the specifications.

4. Concrete Field and Laboratory Tests

a. The laboratory shall cast concrete cylinders and test beams:
   1) One set of four cylinders per 50 C.Y. with a minimum of two sets per day. The cylinders shall be broken: one at 7 days, two at 28 days, one at 56 days, unless otherwise directed by the Engineer.
   2) One beam per 50 C.Y. with a minimum of two beams per day.

b. Temperature and unit weight shall be run on fresh concrete at intervals sufficient for the type of structure being placed and a minimum of once per day. Bulk weight, bucket weight, (tare), net weight, bucket factor (bucket volume) and unit weight shall be recorded on the fresh concrete report. Show all batch weights for yield calculations. Slump and air content tests shall be taken a minimum of one test per 20 C.Y. and at least once per day.

c. All field and laboratory testing shall be performed by technicians certified by the American Concrete Institute (ACI) for the type of testing performed.

d. Initial cure of all cylinders shall be in a temperature controlled cure box or temperature controlled water tank with a hi-low thermometer. Hi-low temperature readings shall be recorded on the fresh concrete report.

5. Asphalt Mix Design

a. For each type of asphalt mix, submit job mix formula (JMF) prepared by an ODOT pre-qualified laboratory from tests performed on the aggregates proposed for use.

b. Sample and test for gradation and bitumen content as per ODOT 441.

1.3 LABORATORY REPORTS

A. Reports of laboratory and field tests will be distributed to the Engineer, Owner, and Suppliers within 24 hours of completion.

END OF SECTION 01038 (7/2008)

SECTION 01041 - PRE-CONSTRUCTION VIDEO DOCUMENTATION

PART 1 - GENERAL

1.1 SCOPE

A. Provide all labor, materials, equipment, and services, and perform all operations necessary to furnish to the Owner a complete color audio-video DVD record of the surface features within the proposed construction zone of influence, including all drive aprons. This record shall include, but not be limited to, all audio-video DVDs, storage cases, video logs, and indexes. The purpose of this coverage shall be to accurately document the pre-construction condition of these surface features.

1.2 QUALIFICATIONS

A. The video DVD documentation shall be done by a responsible commercial firm known to be skilled and regularly engaged in the business of pre-construction color audio-video DVD documentation. The firm shall furnish such information as the owner deems necessary to determine the ability of that firm to perform the work in accordance with the Contract specifications.

1.3 PRODUCTS

A. The color audio-video recording delivered to the Owner shall be on a high quality 1/2" DVD format.

END OF SECTION 01041

SECTION 01042 - QUALIFICATIONS OF TRADESMEN

PART 1 - GENERAL

1.1 CHARACTER OF WORKMEN AND EQUIPMENT

A. The Contractor shall employ competent and efficient workmen for every kind of work. Any person employed on the work who shall refuse or neglect to obey directions of the Engineer or his representative, or who shall be deemed incompetent or disorderly, or who shall commit trespass upon public or private property in the vicinity of the work, shall be dismissed when the Engineer so orders, and shall not be re-employed unless express permission be given by the Engineer. The methods, equipment and appliances used on the work and the labor employed shall be such as will produce a satisfactory quality of work, and shall be adequate to complete the contract within the specified time limit.

B. In hiring of employees for the performance of work under this Contract, or any Subcontract hereunder, no Contractor or Subcontractor, nor any person acting on behalf of such Contractor or Subcontractor, shall, by reason of race, sex, creed or color, discriminate against any citizen of the State of Ohio in the work to which the employment relates. No Contractor, Subcontractor, nor any person on his behalf shall, in any manner, discriminate against or intimidate any employee hired for the performance of work under this contract on account of race, creed, sex or color.

END OF SECTION 01042 (10/93)

SECTION 01060 - SUBMITTALS

PART 1 - GENERAL

1.1 GENERAL

A. Submittals for approval of materials and equipment shall be in conformance with the requirements of the General Requirements and of the product specifications, except that the Engineer may order any additional submittal necessary to fulfill the requirements of the General Requirements.

B. Shop drawings shall provide details, dimensions, and other information that, with required certificates, will show the product is in conformance with the specifications. Details and dimensions shall be adequate for proper installation of the product.

C. Manufacturer's or supplier's certificates shall state that the products have been sampled and tested in accordance with provisions and meet the requirements of specifications included and designated herein and shall be signed by an authorized agent of the manufacturer.

D. Test certificates shall show results of tests by an independent laboratory compared to specification requirements and shall be signed by an authorized agent of the laboratory.

E. In addition to specific submittal requirements listed in the technical specifications, the Contractor shall submit, at a minimum, the following information along with other pertinent items that the Engineer requires to determine whether the equipment is capable of meeting the design criteria and specifications:

1. Catalog data
2. Design data
3. Complete list of all component parts including:

    a. Manufacturer's name and model number
    b. Material of construction
    c. Accessories
    d. Performance data

4. Fabrication drawings
5. Assembly drawings
6. Installation drawings
7. Dimension drawings
8. Wiring diagrams with alpha-numeric code for remote connections where required as shown on the Contract Drawings.

F. The Contractor shall submit a written statement from the manufacturer that the material or equipment is suitable for the intended use and will meet the requirements of the specifications.

G. The Contractor shall submit the supplier's written report that the materials or equipment:

1. Has been properly installed.
2. Is in accurate alignment.
3. Components have been tested and operated satisfactorily.

H. Where required, bid submittals in no way reduce the requirements for shop drawing submittals. Award of the Contract does not constitute approval of the equipment or material on which the Contractor's bid is based.

END OF SECTION 01060 (10/93)

SECTION 01088 – TEMPORARY TRAFFIC CONTROL DEVICES

PART 1 - GENERAL

1.1 BARRICADES, SIGNS AND LIGHTS

A. The Contractor shall employ watchmen on the work when and as necessary. The Contractor shall erect and maintain such strong and suitable barriers and such lights as will effectively prevent the occurrence of any accident to health, limb or property. Lights shall be maintained between the hours of one-half (1/2) hour after sunset and one-half (1/2) hour before sunrise.

B. No manhole or sewer excavation will be left open awaiting connection or removal at a later date by the Contractor's forces or others but shall be temporarily backfilled and resurfaced if applicable with a temporary pavement passable to traffic at no additional cost to the Owner.

C. In addition to other safety requirements, a minimum of four (4) foot high fence will be incorporated around any shaft or manhole or other excavation left open at the end of a day's work.

1.2 MAINTENANCE OF TRAFFIC

A. The Contractor is required to provide maintenance of traffic in conformance with the Ohio Manual of Uniform Traffic Control Devices and Item 614 of the current Construction and Material Specifications of the Ohio Department of Transportation.

B. This work shall include providing suitable and satisfactorily trained and properly attired flagmen for use at any location where existing roadway is narrowed to a width of less than 2 full lanes (18 feet).

C. The Contractor is also responsible for maintaining local access to all residences and businesses along the route of construction and to provide whatever temporary materials are necessary to provide a safe, adequate drive surface, **including ramping of all castings and butt joints.**

D. At all boring locations, Contractor shall provide suitable flashers, barricades, and traffic control devices as may be deemed necessary by the Engineer or the responsible authority in the case of the Department of Transportation, Turnpike Commission, or Conrail. This may extend to maintain facilities on a 24 hour basis until such time as the areas are completely backfilled.

END OF SECTION 01088 (2/3/12)

SECTION 01091 - ENVIRONMENTAL PROTECTION

PART 1 - GENERAL

1.1 UNNECESSARY NOISE, DUST AND ODORS

A. The Contractor's performance of this contract shall be conducted so as to eliminate all unnecessary noise, dust and odors.

1.2 SEWAGE, SURFACE AND FLOOD FLOWS

A. The Contractor shall take whatever action is necessary to provide all necessary tools, equipment and machinery to adequately handle all sewage, surface and flood flows which may be encountered during the performance of the work. The entire cost of and liability for handling such flows is the responsibility of the Contractor and shall be included in the price for the appropriate item.

1.3 WORK IN FREEZING WEATHER

A. Written permission from the Engineer shall be obtained before any work is performed which, in the judgment of the Engineer, may be affected by frost, cold, or snow. When work is performed under such conditions, the Contractor shall provide facilities for heating the materials and for protecting the finished work.

1.4 POLLUTION CONTROL

A. It shall be the responsibility of the Contractor to prevent or limit pollution of air and water resulting from his operations.

B. The Contractor shall perform work required to prevent soil from eroding or otherwise entering onto all paved areas and into natural watercourses, ditches, and public sewer systems, and to prevent dust attributable to his operations from entering the atmosphere. This work shall conform to the requirements of the “Soil Erosion and Sedimentation Control Act, EPA 1972”, as amended.

C. Water containing suspended material, including concrete slurry, from any part of the Contractor’s operations shall be clarified before discharging to drains or streams.

D. Dust on unsurfaced streets or parking areas and any remaining dust on surfaced streets shall be controlled with calcium chloride dust palliative as directed by the Engineer.

E. The Contractor shall construct and maintain filters, sedimentation traps or stilling basins with overflows to clarify waters containing suspended materials from fill areas, excavations, deep wells, well points, and disposal sites before discharging to drains or streams.

1. Silt barriers shall be placed around stockpiles of soil or material susceptible to erosion unless temporary seeding is used instead.

F. The pollution control work shall conform to applicable portions of ODOT Items 207 and 616.

END OF SECTION 01091 (04/10)

SECTION 01099 - FINAL COMPLIANCE AND SUBMITTALS

PART 1 - GENERAL

1.1 The following forms and related sign-offs shall be documented in accordance with provisions of the contract. These forms shall be completed by the Contractor and approved by the Owner before final retainer is approved for release. Forms for Items A to E will be attached to the Contractor's executed copy of the contract.

A. Certificate of Substantial Completion (To be submitted at time of Substantial Completion).

B. Contractor's Certification of Completion.

C. Contractor's Affidavit of Prevailing Wage.

D. Consent of Surety Company for Final Payment.

E. Affidavit of Final Acceptance Date and Correction Period.

F. Certificate of insurance verifying completed operations insurance coverage.

END OF SECTION 01099 4/04

SECTION 02520 - ASPHALT CONCRETE PAVING AND MATERIALS

SECTION 1 - MATERIALS

1.1 The asphalt concrete mixture and installation thereof shall meet Ohio Department of Transportation (ODOT) Specifications except as modified in these specifications.

1.2 In the ODOT Specifications substitute "Engineer" for "Department" (except as stated below in reference to ODOT 403 for Department VA testing and acceptance).

1.3 No steel slag shall be used as coarse or fine aggregate for any asphalt concrete.

1.4 All asphalt cement utilized on this project shall meet AASHTO Provisional Standard MP1 or any superseding AASHTO specification for performance graded asphalt cement binder in conformance with PG 64-22.

1.5 The following exceptions shall be made for the Asphalt Concrete Surface Course:

A. Gravel is prohibited in coarse aggregate material.
B. Recycled Asphalt Product (R.A.P.) will be permitted in accordance with the applicable ODOT specifications.

1.6 Except where designated otherwise in the plans or specifications all asphalt concrete mixes shall be designed for medium traffic volumes. Where light or heavy traffic pavements are designated in the plan, the contractor shall use an asphalt concrete mix designed for such traffic conditions.

1.7 Acceptance of the mixture will be based upon the certification that the mixture was produced according to the approved JMF within the production control and composition tolerances of the specifications. The Contractor shall hire and pay for an independent testing lab approved by the Engineer to perform all sampling, testing, monitoring, analysis and certification required by the Laboratory, Monitoring Team or Department in ODOT 403 and 441. All work by the independent laboratory shall be performed by personnel with ODOT Level II Bituminous Concrete certification.

1.8 **ODOT 401.20 - "Asphalt Binder Price Adjustment" shall not apply to this contract.**

1.9 Monument box and valve box risers shall be East Jordan Iron Works No. 2965, No. 2975, or approved equal. The Contractor shall follow the manufacturer's recommended installation procedure.

1.10 Brick used for manhole, catch basin, or inlet basin castings adjusted to grade under Method A shall be red shale or clay sewer brick meeting the requirements of ASTM C32 sewer brick, grade SM.

1.11 Risers used for manhole castings adjusted to grade under Method B shall be manufactured by Manhole Systems, Model MS-101TB, or approved equal.

1.12 All materials delivered to this project must have been weighed on a platform scale with electronic imprinter to show gross, tare, and net weights. No payment will be made for materials which are not correctly weighed as necessary. Material weight shall not exceed the current legal allowable limit.

1.13 Unless specified elsewhere in the specifications, material for berms shall be limestone only. Recycled concrete and asphalt concrete will not be permitted.

SECTION 2 - PAVING EQUIPMENT

2.1 All spreading equipment shall be self propelled. The Contractor shall identify the make and model of the paving machine that will be used for the intermediate and surface courses for approval prior to the pre-construction meeting.

2.2 All equipment, tools, and machines used in the performance of this work shall be maintained in satisfactory working order at all times. The Contractor shall be prepared to furnish proof of certification that all equipment to be used on the project has been calibrated within the past six (6) months.

SECTION 3 - GENERAL - PAVING

3.1 All paving shall be done on a single-lane basis.

3.2 If traffic loop detectors are encountered and broken, the Contractor is to repair as per local specifications. The cost for this work will be paid under the loop detector replacement bid item, if any; at negotiated unit prices; or by time and materials as directed by the Engineer.

3.3 **Trackless tack coat**, Item 407, shall be applied at the rate of from 0.05 to 0.10 gallons per square yard as appropriate for the surface conditions with sand cover if required (check typical section drawing for exact rates).

3.4 **Driveway aprons shall be matched to new pavement with 24" transition sections** or as shown on the drawings or required by the Engineer. **All drives shall meet pavement at the same elevation pre and post paving.**

3.5 Unless otherwise shown on the drawings, jointing of new to existing pavement shall be by milled butt joints six (6) feet in width (or as shown on the plans) from edge of pavement to edge of pavement. Depth of this milled area shall equal the total of subsequent intermediate course and surface course as specified.

3.6 One (1) copy of each hauled/weighed material truck load ticket (plant ticket) for materials incorporated in this project shall be provided to the project representative daily. If a partial load is used, the Contractor's foreman and the project representative shall confer and come to an agreement as to what portion of the product was used. The percent of material of this load, as reported by the project representative, is what shall be recorded as utilized.

3.7 For variable depth courses where tonnage tickets are used for determining quantities for payment, the conversion to cubic yards shall be number of tons verified and approved by the Engineer divided by 2.00 regardless of the actual density of the mix.

3.8 Positive drainage is to exist subsequent to the completion of the surface course. The Contractor shall take any necessary measures to assure positive drainage of the surface course. It shall be the responsibility of the Contractor to repair any low/puddled areas at his own cost by milling out the affected areas to a minimum depth equal to the nominal depth of the course being repaired and replacing with the specified asphalt concrete to grades that will correct the drainage problem.

3.9 Surface tolerances for all completed surface courses shall be as noted in ODOT 401.19. This tolerance shall apply regardless of whether or not an intermediate course is installed.

3.10 At the direction of the Engineer, periodic weight checks of asphalt concrete in loaded trucks shall be made by the Contractor and verified by the Engineer.

3.11 All quality control testing data performed on material incorporated into this project shall be forwarded to the Engineer for review as soon as it is available.

3.12 Quantity verification (but not necessarily payment quantity) for all asphalt concrete incorporated into the work shall be by weight tickets as produced by the plant or supplier or other means approved by the Engineer. Tack coat shall be verified by a ticket filled out and signed by the Contractor's tack truck driver based on weights taken or observations of level indicators. All verification tickets are required to be submitted to the Engineer on the day the material is incorporated into the work; however, the Engineer may, at his sole discretion, accept verification tickets for any items up to seven (7) calendar days subsequent to the work being performed. **After that date additional verification tickets for material will not be accepted for consideration of payment.**

3.13 No work is to be performed without the presence of the Engineer or his designated Project Representative. Forty-eight (48) hour advance notice of work shall be given to the Engineer and Owner by the Contractor.

3.14 When any surface course or intermediate course is placed on a new intermediate course while that course is still clean and within ten (10) days of installation of that course a tack coat will not be required. When any surface course or intermediate course is placed on a new intermediate course that is not clean or is not placed within ten (10) days after installation of that course, the Contractor shall provide a tack coat, Item 407, at his own expense, as directed by the Engineer.

3.15 **All centerline joints and edges of surface courses abutting curbs, drives or other appurtenances shall be sealed with hot AC-20.**

END OF SECTION 02520 (3/17/11)

SECTION 6
STANDARD SPECIFICATIONS

STANDARD SPECIFICATIONS

1. The "Construction and Material Specifications" of the State of Ohio Department of Transportation (ODOT), 2013 edition, ODOT Supplemental Specification 800, and current ODOT supplemental specifications, and current ODOT standard drawings shall govern work and materials which are not specified or modified herein or on the project Contract Drawings. All references to "the Department" shall be changed to "the Owner or his Representative." The project Contract Drawings and Specifications, in the event of a discrepancy, shall supersede the ODOT Specifications.

   The absence of an “As Per Plan” designation on some item descriptions in the proposal for which there are clear and controlling plan notes, specifications, or other requirements does not relieve the Contractor of the responsibility to read, bid and construct those particular items in accordance with the governing plan notes, specifications, or other requirements and the Contractor shall have no basis of claim based upon an “order of precedence”.

SECTION 7
SPECIFIC PROJECT REQUIREMENTS

SPECIFIC PROJECT REQUIREMENTS

1) Contact During Bidding

All Questions during bidding should be addressed to Allen E. Pennington, P.E., who can be reached at the City of Mentor Engineering and Building Department, 8500 Civic Center Boulevard, Mentor, Ohio 44060 at (440) 255-1100 extension 2618.

2) Taxes

The Contractor shall pay and/or withhold all sales, consumer, use, employment and other taxes (including the City of Mentor 2% income tax) paid or withheld by the Contractor in accordance with the Laws and Regulations of the United States, State of Ohio, and City of Mentor which are applicable during the performance of the work.

3) Insurance

Section SC-5.04(D) of the Supplementary Conditions shall be deleted and no "all risk builders risk" or "installation floater" insurance need be purchased by the Contractor

4) Working Hours

The standard work hours for this project shall be between the hours of 8:00 am and 5:00 pm unless specifically approved by the engineer. Work shall not be permitted nights, or on Saturday, Sunday, or legal holidays, without written permission of the City of Mentor. ***NOTE: Due to the Republican National Convention no work involving lane closures will be permitted from July 16, 2016 through July 24, 2016. Due to utility reconstruction, work on White Oak Drive may not begin until July 5, 2016.***

5) Contract A – Planing and Resurfacing

The contractor shall also be responsible to assist in the preparation and distribution to affected residents a notice of impending construction, the time frame for each phase, the anticipated use of temporary traffic control and the need for caution when exiting their drive. Once approved by the City of Mentor, this notice must be distributed a minimum of seven (7) days prior to the start of work. ***NOTE: NO NOTICES SHALL BE PLACED INSIDE RESIDENT MAILBOXES AS THIS VIOLATES FEDERAL POSTAL REGULATIONS.***

The streets to be planed and resurfaced by the contractor's forces may be performed according to a schedule to be provided to the City by the contractor at the preconstruction meeting. Upon planing of a street, all resurfacing work, including restoration shall be completed within 2 weeks. Liquidated damages of $250 per day shall apply for each and every day or portion thereof that the street remains incomplete past the 2 week limit. No planing of a street shall be started from 5:00 pm Thursday to 8:00 am Monday.

6) **Contract B - Concrete Repairs**

The contractor shall also be responsible to assist in the preparation and distribution to affected residents a notice of impending construction, the time frame for each phase, the anticipated use of temporary traffic control and the need for caution when exiting their drive. Once approved by the City of Mentor, this notice must be distributed a minimum of seven (7) days prior to the start of work. ***NOTE: NO NOTICES SHALL BE PLACED INSIDE RESIDENT MAILBOXES AS THIS VIOLATES FEDERAL POSTAL REGULATIONS.***

The Owner reserves the right to require the contractor to make changes in the approved phasing plan as it deems necessary or as conditions change throughout the removal/replacement/curing period.

All concrete pavement repairs shall be opened to traffic within 72 hours of closing the lane to traffic. Liquidated damages of $100.00 per hour shall apply for each and every hour or portion thereof the lane remains closed to traffic past 72 hours. No concrete repair area may be started from 4 PM Thursday to 8:00 AM Monday.

7) Project Completion (ALL CONTRACTS)

All work including restoration and clean-up shall be completed no later than the contract completion date. Failure to complete all work within the allotted time will result in assessment of liquidated damages. Upon completion of all work and written notification of same by the Contractor, the Engineer and Owner will compile a punch list. The punch list will be sent to the Contractor. All punch list work shall be completed to the satisfaction of the Engineer and the Owner within 14 days after receipt of the punch list. Failure to complete the punch list work within the allotted time will result in assessment of liquidated damages.

SECTION 8
WAGE RATES

PREVAILING WAGES

The Contractor agrees that each individual employed by the Contractor or any Subcontractor and engaged in work on the project under this Contract shall be paid the prevailing wage established by the Department of Industrial Relations of the State of Ohio (www.com.ohio.gov/dico/). This shall occur regardless of any contractual relationship which may be said to exist between the Contractor or any Subcontractor and such individual.

The Prevailing Wage Determination Schedule for this project is attached. If the Contractor needs a wage determination for any trade not included herein, he shall contact the Owner's Prevailing Wage Coordinator.

Prevailing Wage Determination Cover Letter

County: -Select-
Determination Date: 01/05/2016
Expiration Date: 04/05/2016

THE FOLLOWING PAGES ARE PREVAILING RATES OF WAGES ON PUBLIC IMPROVEMENTS FAIRLY ESTIMATED TO BE MORE THAN THE AMOUNT IN O.R.C. SEC. 4115.03 (b) (1) or (2), AS APPLICABLE.

Section 4115.05 provides, in part: "Where contracts are not awarded or construction undertaken within ninety days from the date of the establishment of the prevailing wages, there shall be a redetermination of the prevailing rate of wages before the contract is awarded." The expiration date of this wage schedule is listed above for your convenience only. This wage determination is not intended as a blanket determination to be used for all projects during this period without prior approval of this Department.

Section 4115.04, Ohio Revised Code provides, in part: "Such schedule of wages shall be attached to and made a part of the specifications for the work, and shall be printed on the bidding blanks where the work is done by contract..."

The contract between the letting authority and the successful bidder shall contain a statement requiring that mechanics and laborers be paid a prevailing rate of wage as required in Section 4115.06, Ohio Revised Code.

The contractor or subcontractor is required to file with the contracting public authority upon completion of the project and prior to final payment therefore an affidavit stating that he has fully complied with Chapter 4115 of the Ohio Revised Code.

The wage rates contained in this schedule are the "Prevailing Wages" as defined by Section 4115.03, Ohio Revised Code (the basic hourly rates plus certain fringe benefits). These rates and fringes shall be a minimum to be paid under a contract regulated by Chapter 4115 of the Ohio Revised Code by contractors and subcontractors. The prevailing wage rates contained in this schedule include the effective dates and wage rates currently on file. In cases where future effective dates are not included in this schedule, modifications to the wage schedule will be furnished to the Prevailing Wage Coordinator appointed by the public authority as soon as prevailing wage rates increases are received by this office.

"There shall be posted in a prominent and accessible place on the site of work a legible statement of the Schedule of Wage Rates specified in the contract to the various classifications of laborers, workmen, and mechanics employed, said statement to remain posted during the life of such contract." Section 4115.07, Ohio Revised Code.

Apprentices will be permitted to work only under a bona fide apprenticeship program if such program exists and if such program is registered with the Ohio Apprenticeship Council.

Section 4115.071 provides that no later than ten days before the first payment of wages is due to any employee of any contractor or subcontractor working on a contract regulated by Chapter 4115, Ohio Revised Code, the contracting public authority shall appoint one of his own employees to act as the prevailing wage coordinator for said contract. The duties of the prevailing wage coordinator are outlined in Section 4115.071 of the Ohio Revised Code.

Section 4115.05 provides for an escalator in the prevailing wage rate. Each time a new rate is established, that rate is required to be paid on all ongoing public improvement projects.

A further requirement of Section 4115.05 of the Ohio Revised Code is: "On the occasion of the first pay date under a contract, the contractor shall furnish each employee not covered by a collective bargaining agreement or understanding between employers and bona fide organizations of Labor with individual written notification of the job classification to which the employee is assigned, the prevailing wage determined to be applicable to

that classification, separated into the hourly rate of pay and the fringe payments, and the identity of the prevailing wage Coordinator appointed by the public authority. The contractor or subcontractor shall furnish the same notification to each affected employee every time the job classification of the employee is changed."

Work performed in connection with the installation of modular furniture may be subject to prevailing wage.

THIS PACKET IS NOT TO BE SEPARATED BUT IS TO REMAIN COMPLETE AS IT IS SUBMITTED TO YOU. (Reference guidelines and forms are included in this packet to be helpful in the compliance of the Prevailing Wage law.)
wh1500

PREVAILING WAGE THRESHOLD LEVELS
IMPORTANT NOTICE

Before advertising for bids, contracting, or undertaking construction with its own forces, to construct a public improvement, the Public Authority shall have the Ohio Department of Commerce-Division of Industrial Compliance, Bureau of Wage and Hour Administration determine the prevailing rates of wages for workers employed on the public improvement. The wage determination must be included in the project specifications and printed on the bidding blanks where work is done by contract.

"New" construction threshold for *Building* Construction:	**$250,000**
"Reconstruction, enlargement, alteration, repair, remodeling, renovation, or painting" threshold level for *Building* Construction:	**$75,000**

As of January 1, 2016:

"New" construction that involves *roads, streets, alleys, sewers, ditches and other works connected to road or bridge construction* threshold level has been adjusted to:	**$88,495**
"Reconstruction, enlargement, alteration, repair, remodeling, renovation, or painting" that involves *roads, streets, alleys, sewers, ditches and other works connected to road or bridge construction* threshold level has been adjusted to:	**$26,514**

A) Thresholds are to be adjusted biennially by the Director of the Ohio Department of Commerce.
B) Biennial adjustments to threshold levels are made according to the Building Cost for Skilled Labor Index published by McGraw-Hill's Engineering News-Record, but may not increase or decrease more than 3% for any year.

If there are questions concerning this notification, please contact:

Ohio Department of Commerce
Division of Industrial Compliance
Bureau of Wage and Hour Administration
6606 Tussing Road, PO Box 4009
Reynoldsburg, Ohio 43068-9009
Phone: 614-644-2239
Fax: 614-728-8639
www.com.ohio.gov

Department of Commerce
Division of Industrial Compliance

Bureau of Wage and Hour Administration
6606 Tussing Road - PO Box 4009
Reynoldsburg, OH 43068-9009
Phone 614-644-2239 | Fax 614-728-8639
TTY/TDD 800-750-0750
www.com.ohio.gov
An Equal Opportunity Employer and Service Provider

John R. Kasich, Governor
Andre T. Porter, Director

PREVAILING WAGE CONTRACTOR RESPONSIBILITIES

This is a summary of prevailing wage contractors' responsibilities. For more detailed information please refer to Chapter 4115 of the Ohio Revised Code

General Information

Ohio's prevailing wage laws apply to all public improvements financed in whole or in part by public funds when the total overall project cost is fairly estimated to be more than $250,000 for new construction or $75,000 for reconstruction, enlargement, alteration, repair, remodeling, renovation, or painting.

Ohio's prevailing wage laws apply to all public improvements financed in whole or in part by public funds when the total overall project cost is fairly estimated to be more than $84,314 for new construction that involves roads, streets, alleys, sewers, ditches and other works connected to road or bridge construction or $25,261 for reconstruction, enlargement, alteration, repair, remodeling, renovation, or painting of a public improvement that involves roads, streets, alleys, sewers, ditches and other works connected to road or bridge construction.

a) Thresholds are to be adjusted biennially by the Administrator of Ohio Department of Commerce, Division of Industrial Compliance and Labor, Bureau of Wage and Hour Administration

b) Biennial adjustments to threshold levels are made according to the Price Deflator for Construction Index, United States Department of Commerce, Bureau of the Census*, but may not increase or decrease more than 3% for any year

Penalties for violation

Violators are to be assessed the wages owed, plus a penalty of 100% of the wages owed.

Intentional Violations

If an intentional violation is determined to have occurred, the contractor is prohibited from contracting directly or indirectly with any public authority for the construction of a public improvement. Intentional violation means "a willful, knowing, or deliberate disregard for any provision" of the prevailing wage law and includes but is not limited to the following actions:

- Intentional failure to submit payroll reports as required, or knowingly submitting false or erroneous reports.
- Intentional misclassification of employees for the purpose of reducing wages.
- Intentional misclassification of employees as independent contractors or as apprentices.
- Intentional failure to pay the prevailing wage.
- Intentional failure to comply with the allowable ratio of apprentices to skilled workers as required by the regulations established by Ohio Department of Commerce, Division of Industrial Compliance and Labor, Bureau of Wage and Hour Administration.
- Intentionally employing an officer, of a contractor or subcontractor, that is known to be prohibited from contracting, directly or indirectly, with a public authority.

Responsibilities

A. Pay the prevailing rate of wages as shown in the wage rate schedules issued by the Ohio Department of Commerce, Division of Industrial Compliance and Labor, Bureau of Wage and Hour Administration, for the classification of work being performed.

1. Wage rate schedules include all modifications, corrections, escalations, or reductions to wage rates issued for the project.

2. Overtime must be paid at time and one-half the employee's base hourly rate. Fringe benefits are paid at straight time rate for all hours including overtime.
3. Prevailing wages must be paid in full without any deduction for food, lodging, transportation, use of tools, etc.; unless, the employee has voluntarily consented to these deductions in writing. The public authority and the Director of Ohio Department of Commerce, Division of Industrial Compliance and Labor, Bureau of Wage and Hour Administration - must approve these deductions as fair and reasonable. Consent and approval must be obtained before starting the project.

B. Use of Apprentices and Helpers cannot exceed the ratios permitted in the wage rate schedules.
1. Apprentices must be registered with the U.S. Department of Labor Bureau of Apprenticeship and Training.
2. Contractors must provide the Prevailing Wage Coordinator a copy of the Apprenticeship Agreement for each apprentice on the project.

C. Keep full and accurate payroll records available for inspection by any authorized representative of the Ohio Department of Commerce, Division of Industrial Compliance, and Labor, Bureau of Wage and Hour Administration or the contracting public authority, including the Prevailing Wage Coordinator. Records should include but are not limited to:
1. Time cards, time sheets, daily work records, etc.
2. Payroll ledger\journals and canceled checks\check register.
3. Fringe benefit records must include program, address, account number, & canceled checks.
4. Records made in connection with the public improvement must not be removed from the State for one year following the completion of the project.
5. Out-of-State Corporations must submit to the Ohio Secretary of State the full name and address of their Statutory Agent in Ohio.

D. Prevailing Wage Rate Schedule must be posted on the job site where it is accessible to all employees.

E. Prior to submitting the initial payroll report, supply the Prevailing Wage Coordinator with your project dates to schedule reporting of your payrolls.

F. Supply the Prevailing Wage Coordinator a list of all subcontractors including the name, address, and telephone number for each.
1. **Contractors are responsible for their subcontractors' compliance with requirements of Chapter 4115 of the Ohio Revised Code.**

G. Before employees start work on the project, supply them with written notification of their job classification, prevailing wage rate, fringe benefit amounts, and the name of the Prevailing Wage Coordinator for the project. A copy of the completed signed notification should be submitted to Prevailing Wage Coordinator.

H. Supply all subcontractors with the Prevailing Wage Rates and changes.

I. Submit certified payrolls within two (2) weeks after the initial pay period. Payrolls must include the following information:
1. Employees' names, addresses, and social security numbers.
   (a) Corporate officers/owners/partners and any salaried personnel who do physical work on the project are considered employees. All rate and reporting requirements are applicable to these individuals.
2. Employees' work classification.
   (a) Be specific about the laborers and/or operators (Group)
   (b) For all apprentices, show level/year and percent of journeyman's rate
3. Hours worked on the project for each employee.

(a) The number of hours worked in each day and the total number of hours worked each week.

4. Hourly rate for each employee.
   (a) The minimum rate paid must be the wage rate for the appropriate classification. The Department's Wage Rate Schedule sets this rate.
   (b) All overtime worked is to be paid at time and one-half for all hours worked more than forty (40) per week.
5. Where fringes are paid into a bona fide plan instead of cash, list each benefit and amount per hour paid to program for each employee.
   (a) When the amount contributed to the fringe benefit plan and the total number of hours worked by the employee on all projects for the year are documented, the hourly amount is calculated by dividing the total contribution of the employer by the total number of hours worked by the employee.
   (b) When the amount contributed to the fringe benefit is documented but not the total hours worked, the hourly amount is calculated by **dividing the total yearly contribution by 2080**.
6. Gross amount earned on all projects during the pay period.
7. Total deductions from employee's wages.
8. Net amount paid.

J. The reports shall be certified by the contractor, subcontractor, or duly appointed agent stating that the payroll is correct and complete; and that the wage rates shown are not less than those required by the O.R.C. 4115.

K. Provide a Final Affidavit to the Prevailing Wage Coordinator upon the completion of the project.

INSTRUCTIONS FOR PREPARING CERTIFIED PAYROLL REPORTS

General

Contractors and subcontractors are required by law to submit certified payroll reports for work on projects covered by Ohio's Prevailing Wage Law. This form meets the reporting requirements established by Ohio Revised Code Chapter 4115. The use of this form is not mandatory, employers may submit their own forms provided that all of the required information is included. This form may be reproduced, or additional copies obtained from:

Ohio Department of Commerce Division of Industrial Compliance and Labor Bureau of Wage & Hour Administration 6606 Tussing Rd. P. O. Box 4009 Reynoldsburg, OH 43068-9009 Phone: (614) 644-2239

Certified Payroll Heading

Employer name and address: Company's full name and address. Indicate if the company is a subcontractor, if so list the name of the General or Prime. Project: Name and location of the project, including county. Contracting Public Authority: Name and address of the contracting public authority. Week Ending: Month, day, and year for last day of reporting period. Payroll # : Indicates first, second, third, etc. payroll filed by the company for the project. Page indicator: number of pages included in the report. Project Number: Determined by the public authority. If there is no number leave blank.

Information by Column

- 1. Employee Name, Address and Social Security number: This information must be provided for all employees that perform physical labor on the project. Corporate officers, partners, and salaried employees are considered employees and must be paid the prevailing rate. Individual sole proprietors do not have to pay themselves prevailing rate but must report their hours on the project.
- 2. Work Class: List classification of work actually performed by employee. If unsure of work classification, consult the Ohio department of Commerce, Wage and Hour Bureau. Employees working more than one classification should have separate line entries for each classification. Indicate what year/level for Apprentices. Be specific when using laborer and operator classifications; for example, Backhoe Operator or Asphalt Laborer.
- 3. Hours Worked, Day & Date: In the first row of column 3 enter days of pay period example; M T W TH F S S. The second row is for the date that corresponds with each day for the pay period. In the employee information section enter the number of hours worked on the prevailing wage project and which day the hours were worked. Separate rows are labeled for (ST) straight time hours and (OT) overtime hours. All hours worked after 40, must be paid at the appropriate overtime rate.
- 4. Project Total Hours : Total the hours entered for pay period.
- 5. Base Rate: Enter actual rate per hour paid to the employee. The overtime hourly rate is time and one-half the base rate listed in the prevailing wage schedule plus fringe benefits at straight time rate. The prevailing wage schedule lists the base rate plus fringe benefit amounts. These amounts added together equal the total prevailing wage rate. Employers must pay this total amount in one of three ways.
  - Total rate may be paid in entirety in the base rate to the employee; in which case, the cash designation will be checked for fringe benefits.
  - Total rate may be paid as listed in prevailing wage rate schedule with total fringe amounts paid approved plans.
  - Total rate may be paid with a combination of base rate and fringe payments to approved plans in amounts other than those listed in schedule.
- 6. Project Gross: Enter total gross wages earned on the project for straight time and overtime. Project hours X base rate should equal project gross.
- 7. Fringes: If fringe benefits are paid in the hourly base rate, indicate this by marking the cash space. If fringe benefits are paid to approved plans as listed in the prevailing wage rate schedule, mark the space Approved Plans. If fringe benefits are paid partially in the base rate and partially to approved plans, mark the space Cash & Approved plans. List the hourly amount paid to approved plans for each fringe. If payments are not made on a per hour basis, calculate the hourly fringe credit by dividing the yearly employer contribution by the lesser of: hours actually worked in the year (these must be documented) or 2080. Fringe benefits include: Employer's share of health insurance, life insurance, retirement plan, bonus/profit sharing, sick pay, holiday pay, personal leave, vacation, and education/training programs.
- 8. Total Hours All Jobs: Total all hours worked during the pay period including non-prevailing wage jobs.
- 9. Total Gross All Jobs: Gross amount earned in the pay period for all hours worked.
- 10. Self explanatory.
- 11. Self explanatory.
- 12. Self explanatory.

CONTACT US

Division of Industrial Compliance & Labor
6606 Tussing Road
Reynoldsburg, OH 43068

Phone 614.644.2223
Fax 614.644.2618
Email IC@com.state.oh.us

Webmaster
Contact the Webmaster for Questions or Comments on the Website:
webmaster@com.state.oh.us

CONNECT WITH US

LOOKUP SERVICES

Registered Contractor List
Boiler Information Database
Building Code Compliance Electronic Plan Submission
Board Of Building Appeals Case Lookup
Elevator Database Lookup

RESOURCES

Federal Wage and Hour
U.S. Consumer Product Safety Commission
National Electric, Fire Alarm and Sprinkler Codes
2015 Minimum Wage Poster
Minor Labor Law Poster
2012 Minimum Wage Information

ABOUT INDUSTRIAL COMPLIANCE

Director Jacqueline T. Williams
Superintendent Dave Williamson

Ohio.gov

Copyright©2012 Ohio Department of Commerce. All Rights Reserved.

CONTRACTOR NAME:_____

ADDRESS:_____

_____

PHONE/E-MAIL:_____

Notification of Classification

TO: _____
(Employee's Name)

RE: _____
(Project)

A requirement of Section 4115.05 Ohio Revised Code is "On the occasion of the first pay date under a contract, the contractor shall furnish each employee not covered by a collective bargaining agreement or understanding between employers and bona fide organizations of labor with individual written notification of the job classification to which the employee is assigned, the prevailing wage determined to be applicable to the classification, separated into the hourly rate of pay and the fringe payments and the identity of the prevailing wage coordinator appointed by the public authority. The contractor or sub-contractor shall furnish the same notification to each affected employee every time the job classification of the employee is changed."

Your job classification for the above project is: _____

The prevailing wage for that job classification is: $_____

Which consists of $ _____ per hour in wages.

And $ _____ in fringe benefit payments

The Prevailing Wage Coordinator: Veronica Fetsko
City of Mentor
8500 Civic Center Boulevard
Mentor, Ohio 44060
(440) 974-5776

The undersigned employee acknowledges receiving this Notice:

_____
Employee Signature Date

CERTIFIED PAYROLL REPORT

Employer Name and Address	Name of General/Prime Contractor	Project Name and Location	Contracting Public Authority
Check If Subcontractor_____	Week Ending	Payroll # _____ Page _____ of _____	Project Number

1. Employee Name, Address, SS#	2. Work Class		3. Hours Worked Day & Date							4. Project Total Hrs.	5. Base Rate	6. Project Gross	7. Fringes Cash _____ Approved Plans _____ Cash and Approved Plans_____					8. Total Hours All Jobs	9. Total Gross All Jobs	10. Taxes Withheld	11. Other Deducts	12. Net Paid
													H&W	Pens.	Vac.	App.	Other					
		OT																				
		ST																				
		OT																				
		ST																				
		OT																				
		ST																				
		OT																				
		ST																				
		OT																				
		ST																				
		OT																				
		ST																				
		OT																				
		ST																				
		OT																				
		ST																				

Date_____ My signature on this form signifies that I pay, or supervise the payment of the employees shown above. I am certifying: 1) That during the pay period reported on this form, all hours worked on this project have been paid at the appropriate prevailing wage rate for the class of work done. 2) That fringe benefits have been paid as indicated above. 3) That no rebates or deductions have been or will be made, directly or indirectly from the total wages earned, other other than permissible deductions as defined in the Ohio Revised Code Chapter 4115. 4) That apprentices are registered with the U.S. Department of Labor Bureau of Apprenticeship and Training. The willful falsification of any of the above statements may subject the contractor or subcontractor to civil or criminal prosecution.

Name and Title

Signature

CERTIFICATION

Date _____

I, _____ _____
(Name of signatory part) (Title)

do hereby certify:

(1) That I pay or supervise the payment of the persons employed by _____

_____ on the _____
(Contractor or subcontractor) (Building or work)

_____; that during the payroll period commencing on the

_____ day of _____, 20___ and ending the _____ day of

_____, 20___ all laborers and mechanics employed on said project have been

paid at the prevailing rate of wages for laborers and mechanics for the class of work called for by said project, and that no rebates have been or will be made either directly or indirectly to or on behalf of said

_____
(Contractor or subcontractor)

from the total wages earned by any person and that no deductions have been made either directly or indirectly from the total wages earned by any person, other than permissible deductions as defined in Chapter 4115. Ohio Revised Code, and described below:

_____

_____

_____

_____

(2) That this an all payrolls required to be submitted for the above period are correct and complete; that the prevailing wage rates for laborers and mechanics are not less than the prevailing wage rates then payable in the same trade or occupation in the locality where the work is being performed, as determined by the Ohio Department of Industrial Relations; and, that the classifications set forth for each laborer and mechanic conform with the work performed,

(3) That apprentices employed during the above period are duly registered in a bona fide apprenticeship program registered with the State Apprenticeship Council.

(4) That:

(a) WHERE FRINGE BENEFITS ARE PAID TO APPROVED PLANS, FUNDS OR PROGRAMS

☐ In addition to the base hourly wage rates paid to each laborer or mechanic listed in the above referenced payroll, payments of fringe benefits as determined by the Ohio Department of Industrial Relations have been made to

have been made to _____ in the amount of

$_____ for the benefit of such employees, except as noted in Section (4c) below.

(b) WHERE FRINGE BENEFITS ARE PAID IN CASH

☐ Each laborer or mechanic listed in the above referenced payroll has been paid, as indicated on the payroll, an amount not less than the sum of the applicable basic hourly wage rate plus the amount of the required fringe benefits as determined by the Ohio Department of Industrial Relations, except as noted in Section (4c) below.

(c) EXCEPTIONS

EXCEPTION (CRAFT)	EXPLANATION

Remarks:

Name and Title	Signature

Prevailing Wage Rate
Skilled Crafts

Name of Union: Asbestos Local 207 OH

Change # : LCN01-2015fbLoc207OH

Craft : Asbestos Worker Effective Date : 10/14/2015 Last Posted : 10/14/2015

	BHR	Fringe Benefit Payments						Irrevocable Fund		Total PWR	Overtime Rate
		H&W	Pension	App Tr.	Vac.	Annuity	Other	LECET (*)	MISC (*)		
Classification											
Asbestos Abatement	$24.50	$6.70	$5.60	$0.65	$0.00	$0.00	$0.07	$0.00	$0.00	$37.52	$49.77
Trainee	$16.00	$6.70	$1.30	$0.65	$0.00	$0.00	$0.07	$0.00	$0.00	$24.72	$32.72

Special Calculation Note :

Ratio :

3 Journeymen to 1 Trainee

Jurisdiction (* denotes special jurisdictional note) :

ADAMS, ASHLAND, ASHTABULA*, ATHENS, AUGLAIZE, BROWN, BUTLER*, CARROLL, CHAMPAIGN, CLARK, CLERMONT, CLINTON, COLUMBIANA, COSHOCTON, CRAWFORD, CUYAHOGA, DARKE, DELAWARE, FAIRFIELD, FAYETTE, FRANKLIN, GEAUGA, GREENE, GUERNSEY, HAMILTON, HARDIN, HARRISON, HIGHLAND, HOCKING, HOLMES, HURON, KNOX, LAKE, LICKING, LOGAN, LORAIN, MADISON, MAHONING, MARION, MEDINA, MIAMI, MONTGOMERY, MORGAN, MORROW, MUSKINGUM, NOBLE, PERRY, PICKAWAY, PORTAGE, PREBLE, RICHLAND, ROSS, SHELBY, STARK, SUMMIT, TRUMBULL, TUSCARAWAS, UNION, VINTON, WARREN*, WAYNE

Special Jurisdictional Note : Butler County:(townships of Fairfield,Hanover,Liberty,Milford,Morgan,Oxford,Ripley,Ross,StClair,Union & Wayne.) (Lemon & Madison) Warren County: (townships of: Deerfield, Hamilton, Harlan, Salem, Union & Washington). (Clear Creek, Franklin, Mossie, Turtle Creek & Wayney). Ashtabula County: (post offices & townships of Ashtabula, Austinburg, Geneva, Harperfield, Jefferson, Plymouth & Saybrook) (townships of Andover, Cherry Valley, Colbrook, Canneaut, Denmark, Dorset, East Orwell, Hartsgrove, Kingville, Lenox, Monroe,Morgan,New Lyme,North Kingsville, Orwell, Pierpoint, Richmond Rock Creek, Rome, Shefield, Trumbull, Wayne, Williamsfield & Windsor) Erie County:(post offices & townships of Berlin, Berlin Heights,Birmingham,Florence ,Huron, Milan, Shinrock & Vermilion)

Details :

Asbestos & lead paint abatement including,but not limited to the removal or encapsulation of asbestos & lead paint,all work in conjunction with the preparation of the removal of same & all work in conjunction with the clean up after said removal.The removal of all insulation materials, whether they contain asbestos or not, from mechanical systems (pipes, boilers, ducts, flues, breaching, etc.) is recognized as being the exclusive work of the Asbestos Abatement Workers.

On all mechanical systems (pipes, boilers, ducts, flues, breaching, etc.) that are going to be demolished, the removal of all insulating materials whether they contain asbestos or not shall be the exclusive work of the Laborers.
An Abatement Journeyman is anyone who has more than 300 hours in the Asbestos Abatement field.

Prevailing Wage Rate
Skilled Crafts

Name of Union: Asbestos Local 3 Heat & Frost Insulators

Change # : LCN01-2015fbLoc3

Craft : Asbestos Worker Effective Date : 08/01/2015 Last Posted : 07/15/2015

	BHR		Fringe Benefit Payments						Irrevocable Fund		Total PWR	Overtime Rate
			H&W	Pension	App Tr.	Vac.	Annuity	Other	LECET (*)	MISC (*)		
Classification												
Asbestos Insulation Worker	$37.38		$10.15	$9.25	$0.00	$0.00	$0.00	$0.00	$0.00	$0.00	$56.78	$75.47
Fire Stop Specialist	$37.38		$10.15	$9.25	$0.00	$0.00	$0.00	$0.00	$0.00	$0.00	$56.78	$75.47
Fire Stop Technician	$31.27		$10.15	$4.00	$0.00	$0.00	$0.00	$0.00	$0.00	$0.00	$45.42	$61.06
Apprentice	Percent											
1st year	46.13	$17.24	$10.15	$1.00	$0.00	$0.00	$0.00	$0.00	$0.00	$0.00	$28.39	$37.02
2nd year	58.65	$21.92	$10.15	$2.00	$0.00	$0.00	$0.00	$0.00	$0.00	$0.00	$34.07	$45.04
3rd year	71.15	$26.60	$10.15	$3.00	$0.00	$0.00	$0.00	$0.00	$0.00	$0.00	$39.75	$53.04
4th year	83.65	$31.27	$10.15	$4.00	$0.00	$0.00	$0.00	$0.00	$0.00	$0.00	$45.42	$61.05

Special Calculation Note : There are no special calculations for this classification.

Ratio :

3 Journeymen to 1 Apprentice per shop

Jurisdiction (* denotes special jurisdictional note) :
ASHTABULA*, CUYAHOGA, ERIE*, GEAUGA, HURON, LAKE, LORAIN

Special Jurisdictional Note : Ashtabula (the townships of Ashtabula, Austinburg, Geneva, Jefferson, Plymouth & Saybrook), Lake, Geauga, Cuyahoga, Lorain, Huron, Erie (to Sandusky limits). The counties of Ashland, Coshocton, Holmes, Medina, Portage, Richland, Stark, Tuscarawas, Wayne, Summit, Harrison, Carroll, Columbiana, Mahoning & Trumbull & the remainder of Ashtabula will be considered open counties on a 90 day basis automatically renewable unless revoked by the Union upon 15-day written notice to the employers.

Details :

Mechanics & apprentices engaged in the manufacture,fabrication,assembling,molding,handling,erection,spraying,pouring,mixing,hanging,clean-up, preparation,application,adjusting,alteration,repairing,dismantling,reconditioning,testing&maintenance of Heat & Frost Insulation such as Magnesia,Asbestos,Hair Felt,Wool Felt,Cork,Mineral Wool, Infusorial Earth,Mercerized Silk,Flax,Fiber,Fire Felt,Asbestos Paper,Asbestos Curtain,Asbestos Millboard,Fiberglass, Foam glass, Styrofoam, Polyurethane, fire stopping,smoke stopping,all recyclable material,soundproofing,all penetrations,any flexible or rigid fireproofing,all jacketing systems including metal,lead,and PVC or other material.

Prevailing Wage Rate
Skilled Crafts

Name of Union: Boilermaker Local 744

Change # : CN01-2008Loc744

Craft : Boilermaker Effective Date : 07/01/2009 Last Posted : 06/30/2010

	BHR		Fringe Benefit Payments						Irrevocable Fund		Total PWR	Overtime Rate
			H&W	Pension	App Tr.	Vac.	Annuity	Other	LECET (*)	MISC (*)		
Classification												
Boilermaker	$36.84		$6.82	$6.46	$0.35	$0.00	$3.75	$0.00			$54.22	$72.64
Apprentice	Percent											
1st 6 months	70.00	$25.79	$6.62	$6.46	$0.30	$0.00	$3.75	$0.00			$42.92	$55.81
2nd 6 months	72.52	$26.72	$6.62	$6.46	$0.30	$0.00	$3.75	$0.00			$43.85	$57.20
3rd 6 months	75.00	$27.63	$6.62	$6.46	$0.30	$0.00	$3.75	$0.00			$44.76	$58.58
4th 6 months	77.51	$28.55	$6.62	$6.46	$0.30	$0.00	$3.75	$0.00			$45.68	$59.96
5th 6 months	80.02	$29.48	$6.62	$6.46	$0.30	$0.00	$3.75	$0.00			$46.61	$61.35
6th 6 months	85.00	$31.31	$6.62	$6.46	$0.30	$0.00	$3.75	$0.00			$48.44	$64.10
7th 6 months	90.00	$33.16	$6.62	$6.46	$0.30	$0.00	$3.75	$0.00			$50.29	$66.86
8th 6 months	95.02	$35.01	$6.62	$6.46	$0.30	$0.00	$3.75	$0.00			$52.14	$69.64
Helper	60.00	$22.10	$6.82	$6.46	$0.35	$0.00	$3.75	$0.00			$39.48	$50.54

Special Calculation Note : No special calculations for this skilled craft wage rate are required at this time.

Ratio :

5 Journeymen to 1 Apprentice to 1 Helper

Jurisdiction (* denotes special jurisdictional note) :

ASHTABULA, CARROLL, COSHOCTON,

CUYAHOGA, GEAUGA, HARRISON, HOLMES, LAKE, LORAIN, MAHONING, MEDINA, PORTAGE, STARK, SUMMIT, TRUMBULL, TUSCARAWAS, WAYNE

Special Jurisdictional Note :

Details :

Prevailing Wage Rate
Skilled Crafts

Name of Union: Bricklayer Local 16

Change # : LCN01-2015fbLoc16

Craft : Bricklayer Effective Date : 05/01/2015 Last Posted : 04/22/2015

	BHR		Fringe Benefit Payments						Irrevocable Fund		Total PWR	Overtime Rate
			H&W	Pension	App Tr.	Vac.	Annuity	Other	LECET (*)	MISC (*)		
Classification												
Bricklayer	$32.03		$7.50	$6.70	$0.67	$0.00	$0.00	$0.00	$0.00	$0.00	$46.90	$62.92
Cement Masons	$32.03		$7.50	$6.70	$0.67	$0.00	$0.00	$0.00	$0.00	$0.00	$46.90	$62.92
Pointer Caulker Cleaner	$32.03		$7.50	$6.70	$0.67	$0.00	$0.00	$0.00	$0.00	$0.00	$46.90	$62.92
Plasterers	$32.03		$7.50	$6.70	$0.67	$0.00	$0.00	$0.00	$0.00	$0.00	$46.90	$62.92
Mason Trainess												
1-90 Days	$14.41		$0.00	$0.00	$0.00	$0.00	$0.00	$0.00	$0.00	$0.00	$14.41	$21.62
91-365 Days	$14.41		$7.50	$0.00	$0.00	$0.00	$0.00	$0.00	$0.00	$0.00	$21.91	$29.12
366 plus days	$16.02		$7.50	$0.00	$0.00	$0.00	$0.00	$0.00	$0.00	$0.00	$23.52	$31.53
Apprentice	**Percent**											
1st 6 months	45.00	$14.41	$7.50	$1.75	$0.67	$0.00	$0.00	$0.00	$0.00	$0.00	$24.33	$31.54
2nd 6 months	51.00	$16.34	$7.50	$1.75	$0.67	$0.00	$0.00	$0.00	$0.00	$0.00	$26.26	$34.42
3rd 6 months	58.00	$18.58	$7.50	$1.75	$0.67	$0.00	$0.00	$0.00	$0.00	$0.00	$28.50	$37.79
4th 6 months	66.00	$21.14	$7.50	$1.75	$0.67	$0.00	$0.00	$0.00	$0.00	$0.00	$31.06	$41.63
5th 6 months	75.00	$24.02	$7.50	$1.75	$0.67	$0.00	$0.00	$0.00	$0.00	$0.00	$33.94	$45.95
6th 6 months	85.00	$27.23	$7.50	$1.75	$0.67	$0.00	$0.00	$0.00	$0.00	$0.00	$37.15	$50.76
7th 6 months	90.00	$28.83	$7.50	$1.75	$0.67	$0.00	$0.00	$0.00	$0.00	$0.00	$38.75	$53.16
8th 6 months	95.00	$30.43	$7.50	$1.75	$0.67	$0.00	$0.00	$0.00	$0.00	$0.00	$40.35	$55.56

Special Calculation Note : Improver Classification is 50% to 80% of the journeyman rate with full fringes except pension is at ($1.00)Until such time as the joint apprentice board determines he is a qualified Journeyman, this should not exceed the Apprentice training period.Improvers may not constitute more than 20% of the work force

Ratio :

1-2 Journeymen to 1 Apprentice 1Trainee
3-4 Journeymen to 1 Apprentice 1Trainee
5-6 Journeymen to 2 Apprentice 2 Trainee
7-10 Journeymen to 3 Apprentice 2Trainee

Jurisdiction (* denotes special jurisdictional note) :
ASHTABULA, GEAUGA, LAKE

Special Jurisdictional Note :

Details :

Prevailing Wage Rate
Skilled Crafts

Name of Union: Tile Finisher Local 36 Zone 1

Change # : LCN01-2015fbLoc5

Craft : Bricklayer Effective Date : 05/01/2015 Last Posted : 04/15/2015

	BHR		Fringe Benefit Payments						Irrevocable Fund		Total PWR	Overtime Rate
			H&W	Pension	App Tr.	Vac.	Annuity	Other	LECET (*)	MISC (*)		
Classification												
Bricklayer Tile Finisher	$26.68		$6.85	$3.94	$0.58	$0.00	$0.00	$0.00	$0.00	$0.00	$38.05	$51.39
Apprentice Tile Finishers	Percent											
1st 6 months	60.00	$16.01	$6.85	$0.00	$0.00	$0.00	$0.00	$0.00	$0.00	$0.00	$22.86	$30.86
2nd 6 months	70.03	$18.68	$6.85	$3.94	$0.58	$0.00	$0.00	$0.00	$0.00	$0.00	$30.05	$39.40
3rd 6 months	75.00	$20.01	$6.85	$3.94	$0.58	$0.00	$0.00	$0.00	$0.00	$0.00	$31.38	$41.38
4th 6 months	80.00	$21.34	$6.85	$3.94	$0.58	$0.00	$0.00	$0.00	$0.00	$0.00	$32.71	$43.39
5th 6 months	85.00	$22.68	$6.85	$3.94	$0.58	$0.00	$0.00	$0.00	$0.00	$0.00	$34.05	$45.39
6th 6 months	90.00	$24.01	$6.85	$3.94	$0.58	$0.00	$0.00	$0.00	$0.00	$0.00	$35.38	$47.39

Special Calculation Note :

Ratio :

4 Journeymen to 1 Apprentice
10 Journeymen to 2 Apprentice
16 Journeymen to 3 Apprentice

Jurisdiction (* denotes special jurisdictional note) :
ASHTABULA, CUYAHOGA, GEAUGA, LAKE, LORAIN, MEDINA

Special Jurisdictional Note :

Details :

Tile Finishers:do all the cleaning, acid washing,grouting,by any methods or means. Also unpacking of all tiles,opening of all mastic containers,mixing of all mortar,thin-set and epoxy materials,also the distribution of it. They shall handle and distribute all materials such as sand,cement,lime,tile,all types of tile panels,prefabricated tile units, plastic materials and protective covering of all tile.Clean up and removal of always used in connection of said work.

Prevailing Wage Rate
Skilled Crafts

Name of Union: Bricklayer Local 36 Zone 1 Tile

Change # : LCN01-2015fbLoc36

Craft : Bricklayer Effective Date : 05/01/2015 Last Posted : 04/15/2015

	BHR		Fringe Benefit Payments						Irrevocable Fund		Total PWR	Overtime Rate
			H&W	Pension	App Tr.	Vac.	Annuity	Other	LECET (*)	MISC (*)		
Classification												
Bricklayer Tile Layer	$30.47		$6.90	$1.74	$0.65	$0.00	$4.85	$0.00	$0.00	$0.00	$44.61	$59.85
Apprentice	Percent											
1st 30 days	35.00	$10.66	$0.00	$0.00	$0.00	$0.00	$0.00	$0.00	$0.00	$0.00	$10.66	$16.00
NEXT 6 months	40.00	$12.19	$6.90	$0.00	$0.00	$0.00	$0.00	$0.00	$0.00	$0.00	$19.09	$25.18
2nd 6 months is 1st year	45.00	$13.71	$6.90	$1.74	$0.65	$0.00	$4.85	$0.00	$0.00	$0.00	$27.85	$34.71
3rd 6 months	50.00	$15.24	$6.90	$1.74	$0.65	$0.00	$4.85	$0.00	$0.00	$0.00	$29.37	$36.99
4th 6 months	58.00	$17.67	$6.90	$1.74	$0.65	$0.00	$4.85	$0.00	$0.00	$0.00	$31.81	$40.65
5th 6 months	65.00	$19.81	$6.90	$1.74	$0.65	$0.00	$4.85	$0.00	$0.00	$0.00	$33.95	$43.85
6th 6 months is 3rd year	75.00	$22.85	$6.90	$1.74	$0.65	$0.00	$4.85	$0.00	$0.00	$0.00	$36.99	$48.42
7th 6 months is 3rd year	82.00	$24.99	$6.90	$1.74	$0.65	$0.00	$4.85	$0.00	$0.00	$0.00	$39.13	$51.62
8th 6 months is 3rd year	90.00	$27.42	$6.90	$1.74	$0.65	$0.00	$4.85	$0.00	$0.00	$0.00	$41.56	$55.27

Special Calculation Note : Classification title contains "Bricklayer" because contract originates within the Bricklayer Local.
Note that the classification description is clarified after the local union number at the top of

the page.

Ratio :

1-4 Journeymen to 1 Apprentice
5-11 Journeymen to 2 Apprentice
12-16 Journeymen to 3 Apprentice

Jurisdiction (* denotes special jurisdictional note) :
ASHTABULA, CUYAHOGA, GEAUGA, LAKE, LORAIN, MEDINA

Special Jurisdictional Note :

Details :

Prevailing Wage Rate
Skilled Crafts

Name of Union: Bricklayer Local 5 Marble Mason

Change # : LCN01-2015fbLoc5

Craft : Bricklayer Effective Date : 10/07/2015 Last Posted : 10/07/2015

	BHR		Fringe Benefit Payments						Irrevocable Fund		Total PWR	Overtime Rate
			H&W	Pension	App Tr.	Vac.	Annuity	Other	LECET (*)	MISC (*)		
Classification												
Bricklayer Horizontal Marble Mason	$23.36		$6.55	$6.63	$0.60	$0.00	$0.00	$0.00	$0.00	$0.00	$37.14	$48.82
Masonary Maintenance Specialist	$10.51		$0.00	$0.00	$0.00	$0.00	$0.00	$0.00	$0.00	$0.00	$10.51	$15.77
Apprentice	**Percent**											
1st 6 Months	50.00	$11.68	$6.55	$0.00	$0.00	$0.00	$0.00	$0.00	$0.00	$0.00	$18.23	$24.07
2nd 6 Months	60.00	$14.02	$6.55	$6.63	$0.60	$0.00	$0.00	$0.00	$0.00	$0.00	$27.80	$34.80
3rd 6 Months	65.00	$15.18	$6.55	$6.63	$0.60	$0.00	$0.00	$0.00	$0.00	$0.00	$28.96	$36.56
4th 6 Months	70.00	$16.35	$6.55	$6.63	$0.60	$0.00	$0.00	$0.00	$0.00	$0.00	$30.13	$38.31
5th 6 Months	75.00	$17.52	$6.55	$6.63	$0.60	$0.00	$0.00	$0.00	$0.00	$0.00	$31.30	$40.06
6th 6 Months	85.00	$19.86	$6.55	$6.63	$0.60	$0.00	$0.00	$0.00	$0.00	$0.00	$33.64	$43.56
MASON TRAINEES												
1st 90 Days	45.00	$10.51	$0.00	$0.00	$0.00	$0.00	$0.00	$0.00	$0.00	$0.00	$10.51	$15.77
1st year after 90 Days	45.00	$10.51	$6.55	$0.00	$0.00	$0.00	$0.00	$0.00	$0.00	$0.00	$17.06	$22.32
2nd Year	50.00	$11.68	$6.55	$0.00	$0.00	$0.00	$0.00	$0.00	$0.00	$0.00	$18.23	$24.07

Special Calculation Note : No special calculations for this skilled craft wage rate are required at this time.

Classification title contains "Bricklayer" because contract originates within the Bricklayer Local.

Ratio :

1 Journeyman to 1 Apprentice 1 Trainee
6 Journeyman to 2 Apprentices 1 Trainee
11 Journeyman to 3 Apprentices 2 Trainees

Journeyman Apprentice Mason Trainee
1-2 allows 1 Permits 1
3-4 allows 2 Permits 1
5-6 allows 2 Permits 2
7-10 allows 3 Permits 2

Jurisdiction (* denotes special jurisdictional note) :
ASHTABULA, CUYAHOGA, GEAUGA, LAKE, LORAIN, MEDINA, PORTAGE, SUMMIT

Special Jurisdictional Note :

Details :
In the mutual interest of both Employer and Union and to promote the masonry industry, it is agreed that the Employer may work with the Union and the Local Educational Partners in the jurisdiction of this agreement to employ School to work students provided that no conflicts exist with any Federal or State Laws. Employer must be party to a bonified Apprenticeship and Training program registered with the State of Ohio (OSAC). It is further agreed by both parties that the wages for the Masonry Maintenance Specialist shall be forty-five percent (45%) of the journeyman rate with no fringe benefits or as specified by the Local Educational Partner in the jurisdiction of the agreement.

Prevailing Wage Rate
Skilled Crafts

Name of Union: Bricklayer Local 5 Marble,Terrazzo & Mosaic

Change # : LCN01-2015fbLoc5

Craft : Bricklayer Effective Date : 10/07/2015 Last Posted : 10/07/2015

	BHR		Fringe Benefit Payments						Irrevocable Fund		Total PWR	Overtime Rate
			H&W	Pension	App Tr.	Vac.	Annuity	Other	LECET (*)	MISC (*)		
Classification												
Bricklayer Marble, Terrazzo, Mosaic and Stack	$33.95		$6.55	$6.63	$0.67	$0.00	$0.00	$0.00	$0.00	$0.00	$47.80	$64.78
Swing Scaffold Workers	$34.70		$6.55	$6.63	$0.67	$0.00	$0.00	$0.00	$0.00	$0.00	$48.55	$65.90
Masonary Maintenance	$15.28		$0.00	$0.00	$0.00	$0.00	$0.00	$0.00	$0.00	$0.00	$15.28	$22.92
Apprentice	Percent											
1st 6 months	50.00	$16.98	$6.55	$0.00	$0.00	$0.00	$0.00	$0.00	$0.00	$0.00	$23.53	$32.01
2nd 6 months	55.00	$18.67	$6.55	$6.63	$0.67	$0.00	$0.00	$0.00	$0.00	$0.00	$32.52	$41.86
3rd 6 months	60.00	$20.37	$6.55	$6.63	$0.67	$0.00	$0.00	$0.00	$0.00	$0.00	$34.22	$44.41
4th 6 months	65.00	$22.07	$6.55	$6.63	$0.67	$0.00	$0.00	$0.00	$0.00	$0.00	$35.92	$46.95
5th 6 months	70.00	$23.76	$6.55	$6.63	$0.67	$0.00	$0.00	$0.00	$0.00	$0.00	$37.62	$49.50
6th 6 months	75.00	$25.46	$6.55	$6.63	$0.67	$0.00	$0.00	$0.00	$0.00	$0.00	$39.31	$52.04
7th 6 months	80.00	$27.16	$6.55	$6.63	$0.67	$0.00	$0.00	$0.00	$0.00	$0.00	$41.01	$54.59
8th 6 months	85.00	$28.86	$6.55	$6.63	$0.67	$0.00	$0.00	$0.00	$0.00	$0.00	$42.71	$57.14
MASON TRAINEES 1st 90 Days	45.00	$15.28	$0.00	$0.00	$0.00	$0.00	$0.00	$0.00	$0.00	$0.00	$15.28	$22.92
	45.00	$15.28	$6.55	$0.00	$0.00	$0.00	$0.00	$0.00	$0.00	$0.00	$21.83	$29.47

1st Year after 90 Days												
2nd Year	50.00	$16.98	$6.55	$0.00	$0.00	$0.00	$0.00	$0.00	$0.00	$0.00	$23.53	$32.01

Special Calculation Note : Classification title contains "Bricklayer" because contract originates within the Bricklayer Local.

Ratio :

1 Journeyman to 1 Apprentice 1 Trainee
6 Journeyman to 2 Apprentices 1 Trainee
11 Journeyman to 3 Apprentices 2 Trainees

Jurisdiction (* denotes special jurisdictional note) :
ASHTABULA, GEAUGA, LAKE, PORTAGE, SUMMIT

Journeyman Apprentice Mason Trainee
1-2 allows 1 Permits 1
3-4 allows 2 Permits 1
5-6 allows 2 Permits 2
7-10 allows 3 Permits 2

Special Jurisdictional Note :

Details :
In the mutual interest of both Employer and Union and to promote the masonry industry, it is agreed that the Employer may work with the Union and the Local Educational Partners in the jurisdiction of this agreement to employ School to work students provided that no conflicts exist with any Federal or State Laws. Employer must be party to a bonified Apprenticeship and Training program registered with the State of Ohio (OSAC). It is further agreed by both parties that the wages for the Masonry Maintenance Specialist shall be forty-five percent (45%) of the journeyman rate with no fringe benefits or as specified by the Local Educational Partner in the jurisdiction of the agreement.

Prevailing Wage Rate
Skilled Crafts

Name of Union: Bricklayer Local 5 Terrazzo Finisher

Change # : LCN01-2015fbLoc5

Craft : Bricklayer Effective Date : 06/03/2015 Last Posted : 06/03/2015

	BHR		Fringe Benefit Payments						Irrevocable Fund		Total PWR	Overtime Rate
			H&W	Pension	App Tr.	Vac.	Annuity	Other	LECET (*)	MISC (*)		
Classification												
Bricklayer Terrazzo Finisher	$26.63		$6.55	$4.37	$0.58	$0.00	$0.00	$0.00	$0.00	$0.00	$38.13	$51.44
Apprentice Terrazzo Finishers	**Percent**											
1st 6 months	60.00	$15.98	$6.55	$0.00	$0.00	$0.00	$0.00	$0.00	$0.00	$0.00	$22.53	$30.52
2nd 6 months	70.00	$18.64	$6.55	$4.37	$0.58	$0.00	$0.00	$0.00	$0.00	$0.00	$30.14	$39.46
3rd 6 months	75.00	$19.97	$6.55	$4.37	$0.58	$0.00	$0.00	$0.00	$0.00	$0.00	$31.47	$41.46
4th 6 months	80.00	$21.30	$6.55	$4.37	$0.58	$0.00	$0.00	$0.00	$0.00	$0.00	$32.80	$43.46
5th 6 months	85.00	$22.64	$6.55	$4.37	$0.58	$0.00	$0.00	$0.00	$0.00	$0.00	$34.14	$45.45
6th 6 months	90.00	$23.97	$6.55	$4.37	$0.58	$0.00	$0.00	$0.00	$0.00	$0.00	$35.47	$47.45

Special Calculation Note : Classification title contains "Bricklayer" because contract originates within the Bricklayer Local.
Note that the classification description is clarified after the local union number at the top of the page.

Ratio :

1-2 Journeymen to 1 Apprentice
3- 4 Journeymen to 2 Apprentices

Jurisdiction (* denotes special jurisdictional note) :
ASHTABULA, CUYAHOGA, GEAUGA, LAKE, LORAIN, MEDINA, PORTAGE, SUMMIT

5- 6 Journeymen to 3 Apprentices
7- 8 Journeymen to 4 Apprentices

Special Jurisdictional Note :

Details :
Tile Finishers:do all the cleaning, acid washing,grouting,by any methods or means. Also unpacking of all tiles,opening of all mastic containers,mixing of all mortar,thin-set and epoxy materials,also the distribution of it. They shall handle and distribute all materials such as sand,cement,lime,tile,all types of tile panels,prefabricated tile units, plastic materials and protective covering of all tile.Clean up and removal of always used in connection of said work.

Terrazzo Finishers:Assisting in grinding, and handling of material whether by hand or wheel barrow, or power buggies, including sand Portland cement, resinous cement and admixtures, aggregates of marble, stone or other compositions, bonding adhesives, sealers, waxes, and coatings used for Terrazzo Mosaic work, preparing, mixing by hand or machine, and distributing (spreading) all kinds of underbed or underlayment necessary and all scratch coat used for terrazzo and mosaic work. Also the rubbing, grinding, cleaning, sealing and polishing same either by hand or machine. will assist in the installation of the sand bed, tar paper, wire lath, divider strips, and rolling procedures and acid etching of all concrete floors that require it before installation. Shall handle all materials and assist in the installation of all types of terrazzo floors whether conventional or thin-set variety.

Marble Finishers:Loading and unloading handling and distributing of marble materials including the mixing of all materials used for the installation of marble, such as cement underbeds for the floors, thin-set or epoxies including but not limited to plastic materials. Clean up and removal of all waster material of said work. Cleaning and grouting of all marble and slate, and all polishing of marble and slate floors.

Prevailing Wage Rate
Skilled Crafts

Name of Union: Bricklayer Local 5 Tile & Marble Finisher

Change # : LCN01-2015fbLoc5

Craft : Bricklayer Effective Date : 06/03/2015 Last Posted : 06/03/2015

	BHR		Fringe Benefit Payments						Irrevocable Fund		Total PWR	Overtime Rate
			H&W	Pension	App Tr.	Vac.	Annuity	Other	LECET (*)	MISC (*)		
Classification												
Bricklayer Tile Marble Finisher	$26.90		$6.55	$4.02	$0.58	$0.00	$0.00	$0.00	$0.00	$0.00	$38.05	$51.50
Apprentice Tile Marble Finishers	**Percent**											
1st 6 months	60.00	$16.14	$6.55	$0.00	$0.00	$0.00	$0.00	$0.00	$0.00	$0.00	$22.69	$30.76
2nd 6 months	70.00	$18.83	$6.55	$4.02	$0.58	$0.00	$0.00	$0.00	$0.00	$0.00	$29.98	$39.39
3rd 6 months	75.02	$20.18	$6.55	$4.02	$0.58	$0.00	$0.00	$0.00	$0.00	$0.00	$31.33	$41.42
4th 6 months	80.00	$21.52	$6.55	$4.02	$0.58	$0.00	$0.00	$0.00	$0.00	$0.00	$32.67	$43.43
5th 6 months	85.02	$22.87	$6.55	$4.02	$0.58	$0.00	$0.00	$0.00	$0.00	$0.00	$34.02	$45.46
6th 6 months	90.00	$24.21	$6.55	$4.02	$0.58	$0.00	$0.00	$0.00	$0.00	$0.00	$35.36	$47.46

Special Calculation Note : Classification title contains "Bricklayer" because contract originates within the Bricklayer Local.
Note that the classification description is clarified after the local union number at the top of the page.

Ratio :

Jurisdiction (* denotes special jurisdictional note) :

1-2 Journeymen to 1 Apprentice
3- 4 Journeymen to 2 Apprentice
5-6 Journeymen to 3 Apprentice
7-8 Journeymen to 4 Apprentice

ASHTABULA, CUYAHOGA, GEAUGA, LAKE, LORAIN, MEDINA, PORTAGE, SUMMIT

Special Jurisdictional Note :

Details :

Tile Finishers:do all the cleaning, acid washing,grouting,by any methods or means. Also unpacking of all tiles,opening of all mastic containers,mixing of all mortar,thin-set and epoxy materials,also the distribution of it. They shall handle and distribute all materials such as sand,cement,lime,tile,all types of tile panels,prefabricated tile units, plastic materials and protective covering of all tile.Clean up and removal of always used in connection of said work.

Terrazzo Finishers:Assisting in grinding, and handling of material whether by hand or wheel barrow, or power buggies, including sand Portland cement, resinous cement and admixtures, aggregates of marble, stone or other compositions, bonding adhesives, sealers, waxes, and coatings used for Terrazzo Mosaic work, preparing, mixing by hand or machine, and distributing (spreading) all kinds of underbed or underlayment necessary and all scratch coat used for terrazzo and mosaic work. Also the rubbing, grinding, cleaning, sealing and polishing same either by hand or machine. will assist in the installation of the sand bed, tar paper, wire lath, divider strips, and rolling procedures and acid etching of all concrete floors that require it before installation. Shall handle all materials and assist in the installation of all types of terrazzo floors whether conventional or thin-set variety.

Marble Finishers:Loading and unloading handling and distributing of marble materials including the mixing of all materials used for the installation of marble, such as cement underbeds for the floors, thin-set or epoxies including but not limited to plastic materials. Clean up and removal of all waster material of said work. Cleaning and grouting of all marble and slate, and all polishing of marble and slate floors.

Prevailing Wage Rate
Skilled Crafts

Name of Union: Carpenter Commercial NE District D

Change # : LCN01-2015fbLocNEClevelanddistD

Craft : Carpenter Effective Date : 10/07/2015 Last Posted : 10/07/2015

	BHR		Fringe Benefit Payments						Irrevocable Fund		Total PWR	Overtime Rate
			H&W	Pension	App Tr.	Vac.	Annuity	Other	LECET (*)	MISC (*)		
Classification												
Carpenter	$31.71		$6.32	$6.51	$0.45	$0.00	$2.18	$0.00	$0.00	$0.00	$47.17	$63.03
Apprentice	Percent											
1st 3 months	40.00	$12.68	$0.00	$0.00	$0.00	$0.00	$0.00	$0.00	$0.00	$0.00	$12.68	$19.03
2nd 3 months	45.00	$14.27	$6.32	$0.00	$0.45	$0.00	$0.00	$0.00	$0.00	$0.00	$21.04	$28.17
2nd 6 months is 1st year	50.00	$15.86	$6.32	$0.00	$0.45	$0.00	$0.00	$0.00	$0.00	$0.00	$22.62	$30.55
3rd 6 months	55.00	$17.44	$6.32	$0.00	$0.45	$0.00	$0.00	$0.00	$0.00	$0.00	$24.21	$32.93
4th 6 months is 2nd year	60.00	$19.03	$6.32	$0.00	$0.45	$0.00	$0.00	$0.00	$0.00	$0.00	$25.80	$35.31
5th 6 months	70.00	$22.20	$6.32	$4.56	$0.45	$0.00	$1.53	$0.00	$0.00	$0.00	$35.06	$46.16
6th 6 months is 3rd year	75.01	$23.79	$6.32	$4.88	$0.45	$0.00	$1.64	$0.00	$0.00	$0.00	$37.08	$48.97
7th 6 months	80.00	$25.37	$6.32	$5.21	$0.45	$0.00	$1.74	$0.00	$0.00	$0.00	$39.09	$51.77
8th 6 months is 4th year	85.00	$26.95	$6.32	$5.53	$0.45	$0.00	$1.85	$0.00	$0.00	$0.00	$41.10	$54.58

Special Calculation Note :

Ratio :

Jurisdiction (* denotes special jurisdictional note) :

3 Journeymen to 1 Apprentice ASHTABULA, CUYAHOGA, GEAUGA, LAKE

Special Jurisdictional Note :

Details :

Prevailing Wage Rate
Skilled Crafts

Name of Union: Carpenter Floorlayer NE District D

Change # : LCN01-2015fbLocNEClevelanddistD

Craft : Carpenter Effective Date : 10/07/2015 Last Posted : 10/07/2015

	BHR		Fringe Benefit Payments						Irrevocable Fund		Total PWR	Overtime Rate
			H&W	Pension	App Tr.	Vac.	Annuity	Other	LECET (*)	MISC (*)		
Classification												
Carpenter Floorlayer	$31.71		$6.32	$6.51	$0.47	$0.00	$2.18	$0.00	$0.00	$0.00	$47.19	$63.04
Apprentice	Percent											
1st 3 months	40.00	$12.68	$0.00	$0.00	$0.00	$0.00	$0.00	$0.00	$0.00	$0.00	$12.68	$19.03
2nd 3 months	45.00	$14.27	$6.32	$0.00	$0.47	$0.00	$0.00	$0.00	$0.00	$0.00	$21.06	$28.19
2nd 6 months is 1st year	50.00	$15.86	$6.32	$0.00	$0.47	$0.00	$0.00	$0.00	$0.00	$0.00	$22.64	$30.57
3rd 6 months	55.00	$17.44	$6.32	$0.00	$0.47	$0.00	$0.00	$0.00	$0.00	$0.00	$24.23	$32.95
4th 6 months is 2nd year	60.00	$19.03	$6.32	$0.00	$0.47	$0.00	$0.00	$0.00	$0.00	$0.00	$25.82	$35.33
5th 6 months	70.00	$22.20	$6.32	$4.56	$0.47	$0.00	$1.53	$0.00	$0.00	$0.00	$35.08	$46.18
6th 6 months is 3rd year	75.01	$23.79	$6.32	$4.88	$0.47	$0.00	$1.64	$0.00	$0.00	$0.00	$37.10	$48.99
7th 6 months	80.00	$25.37	$6.32	$5.21	$0.47	$0.00	$1.74	$0.00	$0.00	$0.00	$39.11	$51.79
8th 6 months is 4th year	85.00	$26.95	$6.32	$5.53	$0.47	$0.00	$1.85	$0.00	$0.00	$0.00	$41.12	$54.60

Special Calculation Note :

Ratio :

3 Journeymen to 1 Apprentice

Jurisdiction (* denotes special jurisdictional note) :
ASHTABULA, CUYAHOGA, GEAUGA, LAKE

Special Jurisdictional Note :

Details :

Prevailing Wage Rate
Skilled Crafts

Name of Union: Carpenter Insulation NE District D

Change # : LCN01-2015fbLocNEClevelanddistD

Craft : Carpenter Effective Date : 10/07/2015 Last Posted : 10/07/2015

	BHR		Fringe Benefit Payments						Irrevocable Fund		Total PWR	Overtime Rate
			H&W	Pension	App Tr.	Vac.	Annuity	Other	LECET (*)	MISC (*)		
Classification												
Carpenter Insulation	$25.37		$6.32	$6.51	$0.45	$0.00	$2.18	$0.00	$0.00	$0.00	$40.83	$53.52
Apprentice	Percent											
1st 3 months	50.00	$12.69	$0.00	$0.00	$0.00	$0.00	$0.00	$0.00	$0.00	$0.00	$12.69	$19.03
2nd 3 months	50.00	$12.69	$6.32	$0.00	$0.45	$0.00	$0.00	$0.00	$0.00	$0.00	$19.46	$25.80
2nd 6 months is 1st year	50.00	$12.69	$6.32	$0.00	$0.45	$0.00	$0.00	$0.00	$0.00	$0.00	$19.46	$25.80
3rd 6 months	55.00	$13.95	$6.32	$0.00	$0.45	$0.00	$0.00	$0.00	$0.00	$0.00	$20.72	$27.70
4th 6 months is 2nd year	60.00	$15.22	$6.32	$0.00	$0.45	$0.00	$0.00	$0.00	$0.00	$0.00	$21.99	$29.60
5th 6 months	70.00	$17.76	$6.32	$4.56	$0.45	$0.00	$1.53	$0.00	$0.00	$0.00	$30.62	$39.50
6th 6 months is 3rd year	75.01	$19.03	$6.32	$4.88	$0.45	$0.00	$1.64	$0.00	$0.00	$0.00	$32.32	$41.84
7th 6 months	80.00	$20.30	$6.32	$5.21	$0.45	$0.00	$1.74	$0.00	$0.00	$0.00	$34.02	$44.16
8th 6 month	85.00	$21.56	$6.32	$5.53	$0.45	$0.00	$1.85	$0.00	$0.00	$0.00	$35.71	$46.50

Special Calculation Note : No special calculations for this skilled craft wage rate are required at this time.

Ratio :

2 Journeymen to 1 Apprentice

Jurisdiction (* denotes special jurisdictional note) :
ASHTABULA, CUYAHOGA, GEAUGA, LAKE

Special Jurisdictional Note :

Details :

Prevailing Wage Rate
Skilled Crafts

Name of Union: Carpenter Local 509 NE District Interior Systems

Change # : LCN01-2010mmLoc509Int Systems

Craft : Carpenter Effective Date : 06/17/2010 Last Posted : 06/17/2010

	BHR	Fringe Benefit Payments						Irrevocable Fund		Total PWR	Overtime Rate
		H&W	Pension	App Tr.	Vac.	Annuity	Other	LECET (*)	MISC (*)		
Classification											
Carpenter Window Shade Venetian Blinds Drapery Installer	$15.50	$0.00	$0.00	$0.00	$0.00	$0.00	$0.00			$15.50	$23.25

Special Calculation Note : No special calculations for this skilled craft wage rate are required at this time.

Ratio :

Jurisdiction (* denotes special jurisdictional note) :
ADAMS, ALLEN, ASHLAND, ASHTABULA, ATHENS, AUGLAIZE, BELMONT, BROWN, BUTLER, CARROLL, CHAMPAIGN, CLARK, CLERMONT, CLINTON, COLUMBIANA, COSHOCTON, CRAWFORD, CUYAHOGA, DARKE, DEFIANCE, DELAWARE, ERIE, FAIRFIELD, FRANKLIN, FULTON, GALLIA, GEAUGA, GREENE, GUERNSEY, HAMILTON, HANCOCK, HARDIN, HARRISON, HENRY, HIGHLAND, HOCKING, HOLMES, HURON, JACKSON, JEFFERSON, KNOX, LAKE, LAWRENCE, LICKING, LOGAN, LORAIN, LUCAS, MADISON,

MAHONING, MARION, MEDINA, MEIGS, MERCER, MIAMI, MONROE, MONTGOMERY, MORGAN, MORROW, MUSKINGUM, NOBLE, OTTAWA, PAULDING, PERRY, PICKAWAY, PIKE, PORTAGE, PREBLE, PUTNAM, RICHLAND, ROSS, SANDUSKY, SCIOTO, SENECA, SHELBY, STARK, SUMMIT, TRUMBULL, TUSCARAWAS, UNION, VAN WERT, VINTON, WARREN, WASHINGTON, WAYNE

Special Jurisdictional Note :

Details :

Prevailing Wage Rate
Skilled Crafts

Name of Union: Carpenter Millwright NE District H

Change # : LCN01-2015fbLoc1871H

Craft : Carpenter Effective Date : 10/07/2015 Last Posted : 10/07/2015

	BHR		Fringe Benefit Payments						Irrevocable Fund		Total PWR	Overtime Rate
			H&W	Pension	App Tr.	Vac.	Annuity	Other	LECET (*)	MISC (*)		
Classification												
Carpenter Millwright	$29.76		$6.32	$6.86	$0.45	$0.00	$3.73	$0.05	$0.00	$0.00	$47.17	$62.05
Certified Welder	$30.76		$6.32	$6.86	$0.45	$0.00	$3.73	$0.05	$0.00	$0.00	$48.17	$63.55
Layout man on Monorail	$31.51		$6.32	$6.86	$0.45	$0.00	$3.73	$0.05	$0.00	$0.00	$48.92	$64.67
Apprentice	Percent											
1st 6 months	55.00	$16.37	$6.32	$6.86	$0.45	$0.00	$3.73	$0.05	$0.00	$0.00	$33.78	$41.96
2nd 6 months	58.50	$17.41	$6.32	$6.86	$0.45	$0.00	$3.73	$0.05	$0.00	$0.00	$34.82	$43.52
3rd 6 months	62.00	$18.45	$6.32	$6.86	$0.45	$0.00	$3.73	$0.05	$0.00	$0.00	$35.86	$45.09
4th 6 months	65.50	$19.49	$6.32	$6.86	$0.45	$0.00	$3.73	$0.05	$0.00	$0.00	$36.90	$46.65
5th 6 months	69.00	$20.53	$6.32	$6.86	$0.45	$0.00	$3.73	$0.05	$0.00	$0.00	$37.94	$48.21
6th 6 months	72.50	$21.58	$6.32	$6.86	$0.45	$0.00	$3.73	$0.05	$0.00	$0.00	$38.99	$49.77
7th 6 months	76.00	$22.62	$6.32	$6.86	$0.45	$0.00	$3.73	$0.05	$0.00	$0.00	$40.03	$51.34
8th 6 months	80.00	$23.81	$6.32	$6.86	$0.45	$0.00	$3.73	$0.05	$0.00	$0.00	$41.22	$53.12

Special Calculation Note : Other $0.05 is for UBC Millwright Promotional Fund

Ratio :

Jurisdiction (* denotes special jurisdictional note) :

3 Journeymen to 1 Apprentice

ASHLAND, ASHTABULA, CUYAHOGA, ERIE, GEAUGA, HURON, LAKE, LORAIN, MEDINA, PORTAGE, RICHLAND, SUMMIT

Special Jurisdictional Note :

Details :

If certain projects warrant a larger percentage of apprentices, it will be agreed to increase the ratio of apprentices to journeymen, but Not to exceed (1) Apprentice to (4) Journeymen.

The term "Millwright and Machine Erectors'" jurisdiction shall mean the unloading, hoisting, rigging, skidding, moving, dismantling, aligning, erecting, assembling, repairing, maintenance and adjusting of all structures, processing areas either under cover, under ground or elsewhere, required to process material, handle, manufacture or service, be it powered or receiving power manually, by steam, gas, electricity, gasoline, diesel, nuclear, solar, water, air or chemically, and in industries such as and including, which are identified for the purpose of description, but not limited to, the following: woodworking plants; canning industries; steel mills; coffee roasting plants; paper and pulp; cellophane; stone crushing; gravel and sand washing and handling; refineries; grain storage and handling; asphalt plants; sewage disposal; water plants; laundries; bakeries; mixing plants; can, bottle and bag packing plants; textile mills; paint mills; breweries; milk processing plants; power plants; aluminum processing or manufacturing plants; and amusement and entertainment fields. The installation of mechanical equipment in atomic energy plants; installation of reactors in power plants; installation of control rods and equipment in reactors; and installation of mechanical equipment in rocket missile bases, launchers, launching gantry, floating bases, hydraulic escape doors and any and all component parts thereto, either assembled, semi-assembled or disassembled. The installation of, but not limited to, the following: setting-up of all engines, motors, generators, air compressors, fans, pumps, scales, hoppers, conveyors of all types, sizes and their supports; escalators; man lifts; moving sidewalks; hoists; dumb waiters; all types of feeding machinery; amusement devices; mechanical pin setters and spotters in bowling alleys; refrigeration equipment; and the installation of all types of equipment necessary and required to process material either in the manufacturing or servicing. The handling and installation of pulleys, gears, sheaves, fly wheels, air and vacuum drives, worm drives and gear drives directly or indirectly coupled to motors, belts, chains, screws, legs, boots, guards, booth tanks, all bin valves, turn heads and indicators, shafting, bearings, cable sprockets, cutting all key seats in new and old work, troughs, chippers, filters, calendars, rolls, winders, rewinders, slitters, cutters, wrapping machines, blowers, forging machines, rams, hydraulic or otherwise, planing, extruder, ball, dust collectors, equipment in meat packing plants, splicing of ropes and cables. The laying-out, fabrication and installation of protection equipment including machinery guards, making and setting of templates for machinery, fabrication of bolts, nuts, pans, drilling of holes for any equipment which the Millwrights install regardless of materials; all welding and burning regardless of type, fabrication of all lines, hose or tubing used in lubricating machinery installed by Millwrights; grinding, cleaning, servicing and any machine work necessary for any part of any equipment installed by the Millwrights; and the break-in and trial run of any equipment or machinery installed by the Millwrights. It is agreed the Millwrights shall use the layout tools and optic equipment necessary to perform their work.

Prevailing Wage Rate
Skilled Crafts

Name of Union: Carpenter NE District Industrial Dock & Door

Change # : LCN01-2014fbCarpNEStatewide

Craft : Carpenter Effective Date : 03/05/2014 Last Posted : 03/05/2014

	BHR		Fringe Benefit Payments						Irrevocable Fund		Total PWR	Overtime Rate
			H&W	Pension	App Tr.	Vac.	Annuity	Other	LECET (*)	MISC (*)		
Classification												
Carpenter	$19.70		$5.05	$1.00	$0.15	$0.00	$0.00	$0.00	$0.00	$0.00	$25.90	$35.75
Trainee	Percent											
1st Year	60.00	$11.82	$5.05	$1.00	$0.15	$0.00	$0.00	$0.00	$0.00	$0.00	$18.02	$23.93
2nd Year	80.20	$15.80	$5.05	$1.00	$0.15	$0.00	$0.00	$0.00	$0.00	$0.00	$22.00	$29.90

Special Calculation Note : No special calculations for this skilled craft wage rate are required at this time.

Ratio :

1 Journeymen to 1 Trainee

Jurisdiction (* denotes special jurisdictional note) :

ADAMS, ALLEN, ASHLAND, ASHTABULA, ATHENS, AUGLAIZE, BELMONT, BROWN, BUTLER, CARROLL, CHAMPAIGN, CLARK, CLERMONT, CLINTON, COLUMBIANA, COSHOCTON, CRAWFORD, CUYAHOGA, DARKE, DEFIANCE, DELAWARE, ERIE, FAIRFIELD, FAYETTE, FRANKLIN, FULTON, GALLIA, GEAUGA, GREENE, GUERNSEY, HAMILTON, HANCOCK, HARDIN, HARRISON, HENRY, HIGHLAND, HOCKING, HOLMES, HURON, JACKSON, JEFFERSON, KNOX, LAKE, LAWRENCE, LICKING, LOGAN, LORAIN, LUCAS, MADISON, MAHONING, MARION, MEDINA, MEIGS, MERCER, MIAMI, MONROE,

MONTGOMERY, MORGAN, MORROW,
MUSKINGUM, NOBLE, OTTAWA,
PAULDING, PERRY, PICKAWAY, PIKE,
PORTAGE, PREBLE, PUTNAM, RICHLAND,
ROSS, SANDUSKY, SCIOTO, SENECA,
SHELBY, STARK, SUMMIT, TRUMBULL,
TUSCARAWAS, UNION, VAN WERT,
VINTON, WARREN, WASHINGTON, WAYNE,
WILLIAMS, WOOD, WYANDOT

Special Jurisdictional Note : Industrial Dock and Door is the installation of overhead doors, roll up doors and dock leveling equipment

Details :
10/27/10 New Contract jc

Prevailing Wage Rate
Skilled Crafts

Name of Union: Carpenter Pile Driver NE District M

Change # : LCN01-2015fbLoc1871M

Craft : Carpenter Effective Date : 10/07/2015 Last Posted : 10/07/2015

	BHR		Fringe Benefit Payments						Irrevocable Fund		Total PWR	Overtime Rate
			H&W	Pension	App Tr.	Vac.	Annuity	Other	LECET (*)	MISC (*)		
Classification												
Carpenter Pile Driver	$29.81		$6.32	$6.86	$0.45	$0.00	$3.73	$0.00	$0.00	$0.00	$47.17	$62.07
Diver	$44.72		$6.32	$6.86	$0.45	$0.00	$3.73	$0.00	$0.00	$0.00	$62.08	$84.44
Certified Welder	$30.86		$6.32	$6.86	$0.45	$0.00	$3.73	$0.00	$0.00	$0.00	$48.22	$63.65
Apprentice	**Percent**											
1st 6 months	55.00	$16.40	$6.32	$6.86	$0.45	$0.00	$3.73	$0.00	$0.00	$0.00	$33.76	$41.95
2nd 6 months	58.50	$17.44	$6.32	$6.86	$0.45	$0.00	$3.73	$0.00	$0.00	$0.00	$34.80	$43.52
3rd 6 months	62.00	$18.48	$6.32	$6.86	$0.45	$0.00	$3.73	$0.00	$0.00	$0.00	$35.84	$45.08
4th 6 months	65.50	$19.53	$6.32	$6.86	$0.45	$0.00	$3.73	$0.00	$0.00	$0.00	$36.89	$46.65
5th 6 months	69.00	$20.57	$6.32	$6.86	$0.45	$0.00	$3.73	$0.00	$0.00	$0.00	$37.93	$48.21
6th 6 months	72.50	$21.61	$6.32	$6.86	$0.45	$0.00	$3.73	$0.00	$0.00	$0.00	$38.97	$49.78
7th 6 months	76.00	$22.66	$6.32	$6.86	$0.45	$0.00	$3.73	$0.00	$0.00	$0.00	$40.02	$51.34
8th 6 months	80.00	$23.85	$6.32	$6.86	$0.45	$0.00	$3.73	$0.00	$0.00	$0.00	$41.21	$53.13

Special Calculation Note : No special calculations for this skilled craft wage rate are required at this time.

Ratio :

3 Journeymen to 1 Apprentice

Jurisdiction (* denotes special jurisdictional note) :

ASHLAND, ASHTABULA, CUYAHOGA,
ERIE, GEAUGA, HURON, LAKE, LORAIN,
MEDINA, PORTAGE, RICHLAND, SUMMIT

Special Jurisdictional Note :

Details :

If certain projects warrant a larger percentage of apprentices, it will be agreed to increase the ratio of apprentices to journeymen, but Not to exceed (1) Apprentice to (2) Journeymen.
Employees working with creosoted,chemically treated or toxic materials shall receive $.50 in addition to regular rate. Pile Drivers duties shall include but not limited to: Pile driving, milling, fashioning, joining assembling, erecting, fastening, or dismantling of all material of wood, plastic, metal, fiber, cork and composition and all other substitute materials: pile driving, cutting, fitting and placing of lagging, and the handling, cleaning, erecting, installing and dismantling of machinery, equipment and erecting pre-engineered metal buildings. Pile Drivers work but not limited to: unloading, assembling, erection, repairs, operation, signaling, dismantling and reloading all equipment that is used for pile driving including pule butts is defined as sheeting or scrap piling. Underwater work that may be required in connection with the installation of piling. The driver and his tender work as a team and shall arrive at their own financial arrangements with the contractor. Any configuration of wood, steel, concrete or composite that is jetted, driven or vibrated onto the ground by conventional pile driving equipment for the purpose of supporting a future load that may be permanent or temporary. The construction of all wharves and docks, including the fabrication and installation of floating docks. Driving bracing, plumbing, cutting off and capping of all piling whether wood, metal, pipe piling or composite, loading, unloading, erecting, framing, dismantling, moving and handling of pile driving equipment piling used in the construction and repair of all wharves, docks, piers, trestles, caissons, cofferdams and erection of all sea walls and breakwaters. All underwater and marine work on bulkheads, wharves, docks, shipyards, caissons, piers, bridges, pipeline, work, viaducts, marine cable and trestles, as well as salvage and reclamation work where divers are employed. Rate shall include carpenters, acoustic and ceiling installers, drywall installers, pile drivers and floorlayers.

Prevailing Wage Rate
Skilled Crafts

Name of Union: Carpenter Statewide Office Systems

Change # : LCR02-2010jcJurSTWIDEOfficeSystems

Craft : Carpenter Effective Date : 07/28/2010 Last Posted : 07/28/2010

	BHR		Fringe Benefit Payments						Irrevocable Fund		Total PWR	Overtime Rate
			H&W	Pension	App Tr.	Vac.	Annuity	Other	LECET (*)	MISC (*)		
Classification												
Carpenter Installers	$16.00		$5.47	$1.00	$0.08	$0.00	$0.00	$0.00			$22.55	$30.55
Helper	$9.50		$5.47	$0.00	$0.08	$0.00	$0.00	$0.00			$15.05	$19.80
Installer Trainee	Percent											
1st 6 months	59.40	$9.50	$5.47	$0.00	$0.08	$0.00	$0.00	$0.00			$15.05	$19.81
2nd 6 Months	62.00	$9.92	$5.47	$0.00	$0.08	$0.00	$0.00	$0.00			$15.47	$20.43
3rd 6 Months	65.00	$10.40	$5.47	$0.00	$0.08	$0.00	$0.00	$0.00			$15.95	$21.15
4th 6 Months	67.95	$10.87	$5.47	$0.79	$0.08	$0.00	$0.00	$0.00			$17.21	$22.65
5th 6 months	70.95	$11.35	$5.47	$0.83	$0.08	$0.00	$0.00	$0.00			$17.73	$23.41
6th 6 Months	73.90	$11.82	$5.47	$0.86	$0.08	$0.00	$0.00	$0.00			$18.23	$24.15
7th 6 Months	76.90	$12.30	$5.47	$0.90	$0.08	$0.00	$0.00	$0.00			$18.75	$24.91
8th 6 Months	79.85	$12.78	$5.47	$0.93	$0.08	$0.00	$0.00	$0.00			$19.26	$25.64
9th 6 months	82.80	$13.25	$5.47	$1.00	$0.08	$0.00	$0.00	$0.00			$19.80	$26.42

Special Calculation Note : Helper H&W after 90 days probationary period

Ratio :

Jurisdiction (* denotes special

1 Installer to 1 Trainee or 1 Helper

jurisdictional note) :
ADAMS, ALLEN, ASHLAND, ASHTABULA, ATHENS, AUGLAIZE, BELMONT, BROWN, BUTLER, CARROLL, CHAMPAIGN, CLARK, CLERMONT, CLINTON, COLUMBIANA, COSHOCTON, CRAWFORD, CUYAHOGA, DARKE, DEFIANCE, DELAWARE, ERIE, FAIRFIELD, FAYETTE, FRANKLIN, FULTON, GALLIA, GEAUGA, GREENE, GUERNSEY, HAMILTON, HANCOCK, HARDIN, HARRISON, HENRY, HIGHLAND, HOCKING, HOLMES, HURON, JACKSON, JEFFERSON, KNOX, LAKE, LAWRENCE, LICKING, LOGAN, LORAIN, LUCAS, MADISON, MAHONING, MARION, MEDINA, MEIGS, MERCER, MIAMI, MONROE, MONTGOMERY, MORGAN, MORROW, MUSKINGUM, NOBLE, OTTAWA, PAULDING, PERRY, PICKAWAY, PIKE, PORTAGE, PREBLE, PUTNAM, RICHLAND, ROSS, SANDUSKY, SCIOTO, SENECA, SHELBY, STARK, SUMMIT, TRUMBULL, TUSCARAWAS, UNION, VAN WERT, VINTON, WARREN, WASHINGTON, WAYNE, WILLIAMS, WOOD, WYANDOT

Special Jurisdictional Note :

Details :
Office systems is defined as modular systems with demountable units such as desks, partitions and shelving. All work in connection with the assembly, reconfiguration and repairof all work in the office system field.
INSTALLER: is defined as a qualified office systems mechanic capable of laying out, estimating and installing various office system manufactured products.
INSTALL TRAINEE: is defined as a person training in the estimating, layout and installation in all facets of the office systems industry. An installer trainee will work to assist an installer or lead installer in all installations. He is NOT permitted to work without the assistance of lead installer
INSTALL HELPER: is defined as a person who assists in the delivery,staging and clean up of related office system work. He is NOT to be involved with the installation or layout of work related to office systems.
Receiving,unloading,unpacking,& removal of rubbish shall be done by install helpers.

Prevailing Wage Rate
Skilled Crafts

Name of Union: Cement Mason Bricklayer Local 97 HevHwy A

Change # : LCN01-2015fbHvyHwy

Craft : Bricklayer Effective Date : 06/03/2015 Last Posted : 06/03/2015

	BHR		Fringe Benefit Payments						Irrevocable Fund		Total PWR	Overtime Rate
			H&W	Pension	App Tr.	Vac.	Annuity	Other	LECET (*)	MISC (*)		
Classification												
Cement Mason Bricklayer Sewer Water Treatment A	$28.49		$7.45	$4.75	$0.41	$0.00	$0.00	$0.00	$0.00	$0.00	$41.10	$55.35
Apprentice	Percent											
1st year	50.00	$14.25	$7.45	$4.75	$0.41	$0.00	$0.00	$0.00	$0.00	$0.00	$26.85	$33.98
2nd year	70.00	$19.94	$7.45	$4.75	$0.41	$0.00	$0.00	$0.00	$0.00	$0.00	$32.55	$42.52
3rd year	90.00	$25.64	$7.45	$4.75	$0.41	$0.00	$0.00	$0.00	$0.00	$0.00	$38.25	$51.07

Special Calculation Note : NOT FOR BUILDING CONSTRUCTION.

Ratio :

3 Journeymen to 1 Apprentice
6 Journeymen to 2 Apprentice
9 Journeymen to 3 Apprentice
12 Journeymen to 4 Apprentice
15 Journeymen to 5 Apprentice

Jurisdiction (* denotes special jurisdictional note) :

ADAMS, ALLEN, ASHLAND, ASHTABULA, ATHENS, AUGLAIZE, BELMONT, BROWN, BUTLER, CARROLL, CHAMPAIGN, CLARK, CLERMONT, CLINTON, COLUMBIANA, COSHOCTON, CRAWFORD, CUYAHOGA, DARKE, DEFIANCE, DELAWARE, ERIE, FAIRFIELD, FAYETTE, FRANKLIN, FULTON, GALLIA, GEAUGA, GREENE, GUERNSEY, HAMILTON, HANCOCK, HARDIN, HARRISON, HENRY, HIGHLAND, HOCKING, HOLMES, HURON, JACKSON, JEFFERSON,

KNOX, LAKE, LAWRENCE, LICKING, LOGAN, LORAIN, LUCAS, MADISON, MAHONING, MARION, MEDINA, MEIGS, MERCER, MIAMI, MONROE, MONTGOMERY, MORGAN, MORROW, MUSKINGUM, NOBLE, OTTAWA, PAULDING, PERRY, PICKAWAY, PIKE, PORTAGE, PREBLE, PUTNAM, RICHLAND, ROSS, SANDUSKY, SCIOTO, SENECA, SHELBY, STARK, SUMMIT, TRUMBULL, TUSCARAWAS, UNION, VAN WERT, VINTON, WARREN, WASHINGTON, WAYNE

Special Jurisdictional Note :

Details :

(A) Highway Construction, Sewer, Waterworks And Utility Construction, Industrial & Building Site Heavy Construction, Airport Construction Or Railroad Construction Work.
(B) Power Plant, Tunnels, Amusement Park, Athletic Stadium Site Work ,Pollution Control,Sewer Plant, Waste Plant, & Water Treatment Facilities, Construction.

Prevailing Wage Rate
Skilled Crafts

Name of Union: Cement Mason Bricklayer Local 97 HevHwy B

Change # : LCN01-2015fbHvyHwy

Craft : Bricklayer Effective Date : 06/03/2015 Last Posted : 06/03/2015

	BHR		Fringe Benefit Payments						Irrevocable Fund		Total PWR	Overtime Rate
			H&W	Pension	App Tr.	Vac.	Annuity	Other	LECET (*)	MISC (*)		
Classification												
Cement Mason Bricklayer Power Plants Tunnels Amusement Parks B	$29.48		$7.45	$4.75	$0.42	$0.00	$0.00	$0.00	$0.00	$0.00	$42.10	$56.84
Apprentice	Percent											
1st year	50.00	$14.74	$7.45	$4.75	$0.42	$0.00	$0.00	$0.00	$0.00	$0.00	$27.36	$34.73
2nd year	70.00	$20.64	$7.45	$4.75	$0.42	$0.00	$0.00	$0.00	$0.00	$0.00	$33.26	$43.57
3rd year	90.00	$26.53	$7.45	$4.75	$0.42	$0.00	$0.00	$0.00	$0.00	$0.00	$39.15	$52.42

Special Calculation Note : NOT FOR BUILDING CONSTRUCTION.

Ratio :

3 Journeymen to 1 Apprentice
6 Journeymen to 2 Apprentice
9 Journeymen to 2 Apprentice
12 Journeymen to 4 Apprentice
15 Journeymen to 5 Apprentice

Jurisdiction (* denotes special jurisdictional note) :
ADAMS, ALLEN, ASHLAND, ASHTABULA, ATHENS, AUGLAIZE, BELMONT, BROWN, BUTLER, CARROLL, CHAMPAIGN, CLARK, CLERMONT, CLINTON, COLUMBIANA, COSHOCTON, CRAWFORD, CUYAHOGA, DARKE, DEFIANCE, DELAWARE, ERIE, FAIRFIELD, FAYETTE, FRANKLIN, FULTON, GALLIA, GEAUGA, GREENE, GUERNSEY, HAMILTON, HANCOCK, HARDIN, HARRISON, HENRY, HIGHLAND, HOCKING,

HOLMES, HURON, JACKSON, JEFFERSON, KNOX, LAKE, LAWRENCE, LICKING, LOGAN, LORAIN, LUCAS, MADISON, MAHONING, MARION, MEDINA, MEIGS, MERCER, MIAMI, MONROE, MONTGOMERY, MORGAN, MORROW, MUSKINGUM, NOBLE, OTTAWA, PAULDING, PERRY, PICKAWAY, PIKE, PORTAGE, PREBLE, PUTNAM, RICHLAND, ROSS, SANDUSKY, SCIOTO, SENECA, SHELBY, STARK, SUMMIT, TRUMBULL, TUSCARAWAS, UNION, VAN WERT, VINTON, WARREN, WASHINGTON, WAYNE

Special Jurisdictional Note :

Details :

(A) Highway Construction, Sewer, Waterworks And Utility Construction, Industrial & Building Site Heavy Construction, Airport Construction Or Railroad Construction Work.
(B) Power Plant, Tunnels, Amusement Park, Athletic Stadium Site Work ,Pollution Control,Sewer Plant, Waste Plant, & Water Treatment Facilities, Construction.

Prevailing Wage Rate
Skilled Crafts

Name of Union: Cement Mason Local 132 HvyHwy District I (A)

Change # : LCN01-2015fbHvyHwy

Craft : Cement Mason Effective Date : 05/07/2015 Last Posted : 05/07/2015

	BHR		Fringe Benefit Payments						Irrevocable Fund		Total PWR	Overtime Rate
			H&W	Pension	App Tr.	Vac.	Annuity	Other	LECET (*)	MISC (*)		
Classification												
Cement Mason (A)	$27.80		$7.19	$6.00	$0.55	$0.00	$2.10	$0.00	$0.00	$0.00	$43.64	$57.54
Apprentice	Percent											
1st Year	60.00	$16.68	$7.19	$6.00	$0.55	$0.00	$2.10	$0.00	$0.00	$0.00	$32.52	$40.86
2nd Year	75.00	$20.85	$7.19	$6.00	$0.55	$0.00	$2.10	$0.00	$0.00	$0.00	$36.69	$47.12
3rd Year	90.00	$25.02	$7.19	$6.00	$0.55	$0.00	$2.10	$0.00	$0.00	$0.00	$40.86	$53.37

Special Calculation Note : Work performed in accordance with detail (B) please see Cement Mason HevHwy District 1 (B) wage sheet

Ratio :

2 Journeymen to 1 Apprentice
Company Wide

Jurisdiction (* denotes special jurisdictional note) :
ASHTABULA, CUYAHOGA, FULTON, GEAUGA, HANCOCK, HENRY, LAKE, LUCAS, PUTNAM, WOOD

Special Jurisdictional Note :

Details :
(A) Highway Construction, Sewer, Waterworks And Utility Construction, Industrial & Building Site, Heavy Construction, Airport Construction Or Railroad Construction Work.
(B) Power Plant, Tunnels, Amusement Park, Athletic Stadium Site Work ,Pollution Control,Sewer Plant, Waste Plant, & Water Treatment Facilities, Construction.

Prevailing Wage Rate
Skilled Crafts

Name of Union: Cement Mason Local 132 HvyHwy District I (B)

Change # : LCN01-2015fbHvyHwy

Craft : Cement Mason Effective Date : 05/07/2015 Last Posted : 05/07/2015

	BHR		Fringe Benefit Payments						Irrevocable Fund		Total PWR	Overtime Rate
			H&W	Pension	App Tr.	Vac.	Annuity	Other	LECET (*)	MISC (*)		
Classification												
Cement Mason (B)	$29.27		$7.19	$6.00	$0.55	$0.00	$2.10	$0.00	$0.00	$0.00	$45.11	$59.75
Apprentice	Percent											
1st Year	60.00	$17.56	$7.19	$6.00	$0.55	$0.00	$2.10	$0.00	$0.00	$0.00	$33.40	$42.18
2nd Year	75.00	$21.95	$7.19	$6.00	$0.55	$0.00	$2.10	$0.00	$0.00	$0.00	$37.79	$48.77
3rd Year	90.00	$26.34	$7.19	$6.00	$0.55	$0.00	$2.10	$0.00	$0.00	$0.00	$42.18	$55.35

Special Calculation Note : Work performed in accordance with detail (A) please see Cement Mason HevHwy District 1 (A) wage sheet

Ratio :

2 Journeymen to 1 Apprentice
Company Wide

Jurisdiction (* denotes special jurisdictional note) :
ASHTABULA, CUYAHOGA, FULTON, GEAUGA, HANCOCK, HENRY, LAKE, LUCAS, PUTNAM, WOOD

Special Jurisdictional Note :

Details :
(A) Highway Construction, Sewer, Waterworks And Utility Construction, Industrial & Building Site, Heavy Construction, Airport Construction Or Railroad Construction Work.
(B) Power Plant, Tunnels, Amusement Park, Athletic Stadium Site Work ,Pollution Control,Sewer Plant, Waste Plant, & Water Treatment Facilities, Construction.

Prevailing Wage Rate
Skilled Crafts

Name of Union: Cement Mason Local 132 HvyHwy District I (B)

Change # : LCN01-2015fbHvyHwy

Craft : Cement Mason Effective Date : 05/07/2015 Last Posted : 05/07/2015

	BHR		Fringe Benefit Payments						Irrevocable Fund		Total PWR	Overtime Rate
			H&W	Pension	App Tr.	Vac.	Annuity	Other	LECET (*)	MISC (*)		
Classification												
Cement Mason (B)	$29.27		$7.19	$6.00	$0.55	$0.00	$2.10	$0.00	$0.00	$0.00	$45.11	$59.75
Apprentice	Percent											
1st Year	60.00	$17.56	$7.19	$6.00	$0.55	$0.00	$2.10	$0.00	$0.00	$0.00	$33.40	$42.18
2nd Year	75.00	$21.95	$7.19	$6.00	$0.55	$0.00	$2.10	$0.00	$0.00	$0.00	$37.79	$48.77
3rd Year	90.00	$26.34	$7.19	$6.00	$0.55	$0.00	$2.10	$0.00	$0.00	$0.00	$42.18	$55.35

Special Calculation Note : Work performed in accordance with detail (A) please see Cement Mason HevHwy District 1 (A) wage sheet

Ratio :

2 Journeymen to 1 Apprentice
Company Wide

Jurisdiction (* denotes special jurisdictional note) :
ASHTABULA, CUYAHOGA, FULTON, GEAUGA, HANCOCK, HENRY, LAKE, LUCAS, PUTNAM, WOOD

Special Jurisdictional Note :

Details :
(A) Highway Construction, Sewer, Waterworks And Utility Construction, Industrial & Building Site, Heavy Construction, Airport Construction Or Railroad Construction Work.
(B) Power Plant, Tunnels, Amusement Park, Athletic Stadium Site Work ,Pollution Control,Sewer Plant, Waste Plant, & Water Treatment Facilities, Construction.

Prevailing Wage Rate
Skilled Crafts

Name of Union: Cement Mason Local 404

Change # : LCN01-2012fbLoc404

Craft : Cement Effective Date : 08/22/2012 Last Posted : 08/22/2012

	BHR		Fringe Benefit Payments						Irrevocable Fund		Total PWR	Overtime Rate
			H&W	Pension	App Tr.	Vac.	Annuity	Other	LECET (*)	MISC (*)		
Classification												
Cement Mason	$29.79		$6.67	$3.90	$0.34	$0.00	$4.00	$0.16	$0.00	$0.00	$44.86	$59.76
Apprentice	Percent											
1st yr	63.45	$18.90	$6.67	$3.90	$0.34	$0.00	$0.00	$0.16	$0.00	$0.00	$29.97	$39.42
2nd yr	78.40	$23.36	$6.67	$3.90	$0.34	$0.00	$0.00	$0.16	$0.00	$0.00	$34.43	$46.10
3rd yr	88.43	$26.34	$6.67	$3.90	$0.34	$0.00	$0.00	$0.16	$0.00	$0.00	$37.41	$50.58

Special Calculation Note : No special calculations for this skilled craft wage rate are required at this time. Other is Safety training

Ratio :

5 Journeymen to 1 Apprentice employed by a contractor

Jurisdiction (* denotes special jurisdictional note) :
ASHTABULA, CUYAHOGA, GEAUGA, LAKE, LORAIN

Special Jurisdictional Note :

Details :

Prevailing Wage Rate
Skilled Crafts

Name of Union: Electrical Local 673 Inside

Change # : LCN01-2015fbLoc673in

Craft : Electrical Effective Date : 06/10/2015 Last Posted : 06/10/2015

	BHR		Fringe Benefit Payments						Irrevocable Fund		Total PWR	Overtime Rate
			H&W	Pension	App Tr.	Vac.	Annuity	Other	LECET (*)	MISC (*)		
Classification												
Electrician	$33.37		$8.70	$6.65	$0.60	$0.00	$2.10	$0.00	$0.00	$0.00	$51.42	$68.10
Cable Splicers	$33.62		$8.70	$6.66	$0.60	$0.00	$2.10	$0.00	$0.00	$0.00	$51.68	$68.49
Welders	$34.37		$8.70	$6.68	$0.60	$0.00	$2.10	$0.00	$0.00	$0.00	$52.45	$69.63
Apprentice	**Percent**											
1st 6 months	35.00	$11.68	$8.70	$0.35	$0.60	$0.00	$0.00	$0.00	$0.00	$0.00	$21.33	$27.17
2nd 6 months	40.00	$13.35	$8.70	$0.40	$0.60	$0.00	$0.00	$0.00	$0.00	$0.00	$23.05	$29.72
2nd year	50.02	$16.69	$8.70	$6.15	$0.60	$0.00	$2.10	$0.00	$0.00	$0.00	$34.24	$42.59
3rd year	60.00	$20.02	$8.70	$6.25	$0.60	$0.00	$2.10	$0.00	$0.00	$0.00	$37.67	$47.68
4th year	70.00	$23.36	$8.70	$6.35	$0.60	$0.00	$2.10	$0.00	$0.00	$0.00	$41.11	$52.79
5th year	85.00	$28.36	$8.70	$6.50	$0.60	$0.00	$2.10	$0.00	$0.00	$0.00	$46.26	$60.45

Special Calculation Note : Pension calculation for journeymen shall be $5.38 per hour paid plus 3% of gross. Pension calculation for Apprentices is equal to 3% for first two years then, $5.38 per hour paid plus 3% of gross.

Ratio :

The first person assigned to a job site shall be a Journeyman Wireman. Each job site shall be allowed a ratio of 2 Apprentice for every 3 Journeymen Wireman or fraction thereof:
1 to 3 Journeymen to 2 Apprentices
4 to 6 Journeymen to 4 Apprentices
7 to 9 Journeymen to 6 Apprentices

Jurisdiction (* denotes special jurisdictional note) :
ASHTABULA*, GEAUGA*, LAKE

Special Jurisdictional Note : The following townships In Ashtabula County are EXCLUDED: Orwell, Colebrook, Williamsfield, Wayne and Windsor.

In Geauga County the following townships are INCLUDED: Burton, Chardon, Claridon, Hambden, Huntsburg, Montville, Munson, Newbury and Thompson.

Details :
High Pay: 45 feet above ground or floor shall be paid $2.00 over Journeyman Scale.
If required to climb on steel, potain crane, etc., that is High Time.

NOTE: If approved scaffolding with handrails, toe boards, netting, bucket trucks, JLG, decks with proper handrails are used No High Time Shall be paid.

Prevailing Wage Rate
Skilled Crafts

Name of Union: Electrical Local 673 Inside Lt Commercial Northern

Change # : LCN01-2015fbLoc673in

Craft : Electrical Effective Date : 06/10/2015 Last Posted : 06/10/2015

	BHR		Fringe Benefit Payments						Irrevocable Fund		Total PWR	Overtime Rate
			H&W	Pension	App Tr.	Vac.	Annuity	Other	LECET (*)	MISC (*)		
Classification												
Electrician	$33.37		$8.70	$6.65	$0.60	$0.00	$2.10	$0.00	$0.00	$0.00	$51.42	$68.10
Cable Splicers	$33.62		$8.70	$6.65	$0.60	$0.00	$2.10	$0.00	$0.00	$0.00	$51.67	$68.48
Welders	$34.37		$8.70	$6.65	$0.60	$0.00	$2.10	$0.00	$0.00	$0.00	$52.42	$69.60
CE-3 12,001-14,000 Hrs	$23.48		$5.01	$0.70	$0.74	$0.00	$0.70	$0.00	$0.11	$0.00	$30.74	$42.48
CE-2 10,001-12,000 Hrs	$18.45		$5.01	$0.55	$0.74	$0.00	$0.55	$0.00	$0.11	$0.00	$25.41	$34.63
CE-1 8,001-10,000 Hrs	$16.77		$5.01	$0.50	$0.74	$0.00	$0.50	$0.00	$0.11	$0.00	$23.63	$32.02
CW-4 6,001-8,000 Hrs	$15.09		$5.01	$0.45	$0.74	$0.00	$0.45	$0.00	$0.11	$0.00	$21.85	$29.39
CW-3 4,001-6,000 Hrs	$13.42		$5.01	$0.40	$0.74	$0.00	$0.40	$0.00	$0.11	$0.00	$20.08	$26.79
CW-2 2,001-4,000 Hrs	$11.74		$5.01	$0.35	$0.74	$0.00	$0.35	$0.00	$0.11	$0.00	$18.30	$24.17
CW-1 0-2,000 Hrs	$11.74		$5.01	$0.35	$0.74	$0.00	$0.35	$0.00	$0.11	$0.00	$18.30	$24.17
Apprentice	Percent											
1st 6 months	35.00	$11.68	$8.70	$0.35	$0.60	$0.00	$0.00	$0.00	$0.00	$0.00	$21.33	$27.17
2nd 6 months	40.00	$13.35	$8.70	$0.40	$0.60	$0.00	$0.00	$0.00	$0.00	$0.00	$23.05	$29.72
2nd year	50.02	$16.69	$8.70	$6.15	$0.60	$0.00	$2.10	$0.00	$0.00	$0.00	$34.24	$42.59
3rd year	60.00	$20.02	$8.70	$6.25	$0.60	$0.00	$2.10	$0.00	$0.00	$0.00	$37.67	$47.68
4th year	70.00	$23.36	$8.70	$6.35	$0.60	$0.00	$2.10	$0.00	$0.00	$0.00	$41.11	$52.79

5th year	85.00	$28.36	$8.70	$6.50	$0.60	$0.00	$2.10	$0.00	$0.00	$0.00	$46.26	$60.45

Special Calculation Note : Pension calculation for journeymen shall be $5.38 per hour paid plus 3% of gross. Pension calculation for Apprentices is equal to 3% for first two years then, $5.38 per hour paid plus 3% of gross. Other for $0.11 is for Aministration Fund.

Ratio :

Each job site shall be allowed a ratio of
2 Apprentice for every 3
Journeymen Wireman or fraction thereof:
1 to 3 Journeymen to 2 Apprentices
4 to 6 Journeymen to 4 Apprentices
7 to 9 Journeymen to 6 Apprentices

Construction Electrician and Construction Wireman Ratio
There shall be a minimum ratio of one inside Journeyman Wireman to every (4) employees of different classifications per jobsite. An Inside Journeyman Wireman is required on the project as the fifth (5th) worker or when apprentices are used

Jurisdiction (* denotes special jurisdictional note) :
ASHTABULA*, GEAUGA*, LAKE

Special Jurisdictional Note : The following townships In Ashtabula County are EXCLUDED: Orwell, Colebrook, Williamsfield, Wayne and Windsor.

In Geauga County the following townships are INCLUDED: Burton, Chardon, Claridon, Hambden, Huntsburg, Montville, Munson, Newbury and Thompson.

The scope of work for the light commercial agreement shall apply to the following small medical clinics, stand-alone doctor and dentist offices with up to 600 amp service (not attached to a hospital), gas stations/convenience stores, fast food restaurants and franchised chain restaurants including independent bars and taverns, places of worship, funeral homes, nursing homes, assisted living facilities and day-care facilities under 15,000 sq ft, small office, retail/wholesale facilities under 15,000 sq ft with less than 10 units attached, storage units, car washes, express hotels and motels (4 stories or less) without conference or restaurants facilities, residential units (subject to Davis Bacon Rates) small stand-alone manufacturing facilities when free standing and not part of a larger facility (less than 15,000 sq ft) solar projects (500 panels or less) unless other wise covered under this agreement, lighting retrofits (when not associated with remodels involving branch re-circuiting) Lighting retrofits shall be defined as the changing of lamps and ballasts in existing light fixtures and shall also include the one for one replacement of existing fixtures.

Details :
High Pay: 45 feet above ground or floor shall be paid $2.00 over Journeyman Scale.
If required to climb on steel, potain crane, etc., that is High Time.

NOTE: If approved scaffolding with handrails, toe boards, netting, bucket trucks, JLG, decks with

proper handrails are used No High Time Shall be paid.

Prevailing Wage Rate
Skilled Crafts

Name of Union: Electrical Local 673 Lightning Rod

Change # : LCN01-2015fbLoc673

Craft : Electrical Effective Date : 08/05/2015 Last Posted : 08/05/2015

	BHR		Fringe Benefit Payments						Irrevocable Fund		Total PWR	Overtime Rate
			H&W	Pension	App Tr.	Vac.	Annuity	Other	LECET (*)	MISC (*)		
Classification												
Electrical Lightning Protection	$27.09		$7.00	$0.81	$0.00	$1.93	$1.64	$0.00	$0.00	$0.00	$38.47	$52.02
Experience Level	**Percent**											
Lightning Protection Installer 1st day-6 months	50.00	$13.55	$7.00	$0.41	$0.00	$0.36	$0.82	$0.00	$0.00	$0.00	$22.14	$28.91
Lightning Protection Installer 2nd 6 months	55.00	$14.90	$7.00	$0.45	$0.00	$0.40	$0.90	$0.00	$0.00	$0.00	$23.65	$31.10
Lightning Protection Installer 3rd 6th months	60.00	$16.25	$7.00	$0.49	$0.00	$0.79	$0.99	$0.00	$0.00	$0.00	$25.52	$33.65
Lightning Protection Installer 4th 6 months months	65.00	$17.61	$7.00	$0.53	$0.00	$0.86	$1.07	$0.00	$0.00	$0.00	$27.07	$35.87
Lightning Protection Installer 3rd Year	70.00	$18.96	$7.00	$0.57	$0.00	$1.35	$1.15	$0.00	$0.00	$0.00	$29.03	$38.51
	80.03	$21.68	$7.00	$0.65	$0.00	$1.54	$1.31	$0.00	$0.00	$0.00	$32.18	$43.02

Lightning Protection Installer 4th Year												
Lightning Protection Installer 5th Year	90.00	$24.38	$7.00	$0.73	$0.00	$1.73	$1.48	$0.00	$0.00	$0.00	$35.32	$47.51

Special Calculation Note :

Ratio :

3 Journeyman to 1 Apprentice

Jurisdiction (* denotes special jurisdictional note) :
ASHTABULA, GEAUGA, LAKE

Special Jurisdictional Note :

Details :

Prevailing Wage Rate
Skilled Crafts

Name of Union: Electrical Local 673 Voice Data Video

Change # : LCN01-2015fbLoc673VDV

Craft : Voice Data Video Effective Date : 06/24/2015 Last Posted : 06/24/2015

	BHR		Fringe Benefit Payments						Irrevocable Fund		Total PWR	Overtime Rate
			H&W	Pension	App Tr.	Vac.	Annuity	Other	LECET (*)	MISC (*)		
Classification												
Electrical Installer Technician	$25.55		$5.68	$0.77	$0.60	$0.00	$1.95	$0.00	$0.00	$0.00	$34.55	$47.33
Communication Technician	$26.30		$5.68	$0.79	$0.60	$0.00	$1.95	$0.00	$0.00	$0.00	$35.32	$48.47
Senior Technician	$26.80		$5.68	$0.80	$0.60	$0.00	$1.95	$0.00	$0.00	$0.00	$35.83	$49.23
Apprentice	**Percent**											
1st 6 Months 750 hrs OJT w/satisfactory progress in related training & on the job	55.00	$14.05	$5.68	$0.42	$0.60	$0.00	$1.95	$0.00	$0.00	$0.00	$22.70	$29.73
2nd 6 Months 750 hrs additional OJT w/completion of first yr training	65.00	$16.61	$5.68	$0.50	$0.60	$0.00	$1.95	$0.00	$0.00	$0.00	$25.34	$33.64
2nd yr 750 hrs additional OJT w/satisfactory progress in related training & on the job	75.00	$19.16	$5.68	$0.57	$0.60	$0.00	$1.95	$0.00	$0.00	$0.00	$27.96	$37.54
3rd yr 750 hrs additional OJT w/completion of 2nd yr training	80.00	$20.44	$5.68	$0.61	$0.60	$0.00	$1.95	$0.00	$0.00	$0.00	$29.28	$39.50
	85.00	$21.72	$5.68	$0.65	$0.60	$0.00	$1.95	$0.00	$0.00	$0.00	$30.60	$41.46

4th yr 750 hrs OJT w/satisfactory progress in related training & on the job												
5th yr 750 hrs additional OJT w/completion of 3rd yr related training	90.00	$23.00	$5.68	$0.69	$0.60	$0.00	$1.95	$0.00	$0.00	$0.00	$31.92	$43.41

Special Calculation Note : No special calculations for this skilled craft wage rate are required at this time.

Ratio :

1 to 3 Journeyman to 2 Apprentice
4 to 6 Journeyman to 4 Apprentice
7 to 9 Journeyman to 6 Apprentices

Jurisdiction (* denotes special jurisdictional note) :
ASHTABULA*, GEAUGA*, LAKE

Special Jurisdictional Note : In Ashtabula County the following townships are excluded: (Orwell, Colebrook, Williamsfield, Wayne and Windsor). In Geauga County the following townships are included: (Burton, Chardon, Claridon, Hambden, Huntsburg, Montville, Munson, Newbury and Thompson)

Details :
The following work is EXCLUDED from the Teledata Technician work scope:
The installation of computer systems in industrial applications such as assembly lines, robotics, computer controller manufacturing systems.
The installation of conduit and/ or raceways shall be installed by Inside Wireman . On sites where there is no Inside Wireman employed, the Teledata Technician may install raceway, or conduit not greater then 10 ft.
Fire Alarm work is excluded on all new construction sites or wherever the fire alarm system is installed in conduit
All HVAC control work.

*Installer Technician: Successful completion of the Installer/Technician Apprenticeship Program or have been certified by the IBEW/NECA Joint Apprenticeship and Training Program as an Installer/Technician.
*Communications Technician: At least 2 years experience as a Installer/Technician and a minimum of 12 hours continuous related education or have been certified by an IBEW/NECA Joint Apprenticeship Training Program as a Communication Technician.

Prevailing Wage Rate
Skilled Crafts

Name of Union: Electrical Local 71
DOT Traffic Signal Highway Lighting Cleveland

Change # : LCN1-2015fbLoc71DOTClev

Craft : Lineman Effective Date : 03/31/2015 Last Posted : 03/31/2015

	BHR		Fringe Benefit Payments						Irrevocable Fund		Total PWR	Overtime Rate
			H&W	Pension	App Tr.	Vac.	Annuity	Other	LECET (*)	MISC (*)		
Classification												
Electrical Lineman	$33.93		$5.00	$1.02	$0.34	$0.00	$6.79	$0.00	$0.00	$0.00	$47.08	$64.04
Technician	$33.93		$5.00	$1.02	$0.34	$0.00	$6.79	$0.00	$0.00	$0.00	$47.08	$64.04
Equipment Operator	$30.54		$5.00	$0.92	$0.31	$0.00	$6.11	$0.00	$0.00	$0.00	$42.88	$58.15
Groundman 0 to 1 Year	$20.35		$5.00	$0.61	$0.20	$0.00	$4.07	$0.00	$0.00	$0.00	$30.23	$40.41
Groundman 1 Year or more	$23.75		$5.00	$0.71	$0.24	$0.00	$4.75	$0.00	$0.00	$0.00	$34.45	$46.33
Traffic Apprentice	**Percent**											
1st 1,000 Hours	60.00	$20.36	$5.00	$0.61	$0.20	$0.00	$4.07	$0.00	$0.00	$0.00	$30.24	$40.42
2nd 1,000 Hours	65.00	$22.05	$5.00	$0.66	$0.22	$0.00	$4.41	$0.00	$0.00	$0.00	$32.34	$43.37
3rd 1,000 Hours	70.01	$23.75	$5.00	$0.71	$0.24	$0.00	$4.75	$0.00	$0.00	$0.00	$34.45	$46.33
4th 1,000 Hours	75.00	$25.45	$5.00	$0.76	$0.25	$0.00	$5.09	$0.00	$0.00	$0.00	$36.55	$49.27
5th 1,000 Hours	80.00	$27.14	$5.00	$0.81	$0.27	$0.00	$5.43	$0.00	$0.00	$0.00	$38.65	$52.23
6th 1,000 Hours	90.00	$30.54	$5.00	$0.92	$0.31	$0.00	$6.11	$0.00	$0.00	$0.00	$42.88	$58.15

Special Calculation Note : No special calculations for this skilled craft wage rate are required at this time.

Ratio :

1 Journeymen to 1 Apprentice

Jurisdiction (* denotes special jurisdictional note) :

ASHTABULA, CUYAHOGA, GEAUGA, LAKE, LORAIN

Special Jurisdictional Note :

Details :

A groundman when directed shall assist a Journeymen in the performance of his/her work on the ground, including the use of hand tools. Under no circumstances shall this classification climb poles, towers, ladders, or work from an elevated platform or bucket truck. This classification shall not perform work normally assigned to an apprentice lineman. There shall be no more than one (1) Groundman for each two (2) Journeyman except when performing DOT Traffic Signal or Highway lighting work where the ratio can be two (2) Groundman for each Journeyman or Operator.

Prevailing Wage Rate
Skilled Crafts

Name of Union: Electrical Local 71 Cleveland Commercial Projects

Change # : LCN1-2015fbLoc71Clev

Craft : Lineman Effective Date : 03/31/2015 Last Posted : 03/31/2015

	BHR		Fringe Benefit Payments						Irrevocable Fund		Total PWR	Overtime Rate
			H&W	Pension	App Tr.	Vac.	Annuity	Other	LECET (*)	MISC (*)		
Classification												
Electrical Lineman	$42.59		$5.00	$1.28	$0.43	$0.00	$8.52	$0.00	$0.00	$0.00	$57.82	$79.12
Cable Splicer	$42.59		$5.00	$1.28	$0.43	$0.00	$8.52	$0.00	$0.00	$0.00	$57.82	$79.12
Equip. Operator	$38.33		$5.00	$1.15	$0.38	$0.00	$7.67	$0.00	$0.00	$0.00	$52.53	$71.69
Groundman 0 to 12 months	$25.55		$5.00	$0.77	$0.26	$0.00	$5.11	$0.00	$0.00	$0.00	$36.69	$49.47
Groundman 1 year plus	$29.81		$5.00	$0.89	$0.30	$0.00	$5.96	$0.00	$0.00	$0.00	$41.96	$56.86
Apprentice Linemen	**Percent**											
1st 1000 Hrs	60.01	$25.56	$5.00	$0.77	$0.26	$0.00	$5.11	$0.00	$0.00	$0.00	$36.70	$49.48
2nd 1000 Hrs	65.01	$27.69	$5.00	$0.83	$0.28	$0.00	$5.54	$0.00	$0.00	$0.00	$39.34	$53.18
3rd 1000 Hrs	70.01	$29.82	$5.00	$0.89	$0.30	$0.00	$5.96	$0.00	$0.00	$0.00	$41.97	$56.88
4th 1000 Hrs	75.01	$31.95	$5.00	$0.96	$0.32	$0.00	$6.39	$0.00	$0.00	$0.00	$44.62	$60.59
5th 1000 Hrs	80.01	$34.08	$5.00	$1.02	$0.34	$0.00	$6.82	$0.00	$0.00	$0.00	$47.26	$64.29
6th 1000 Hrs	85.01	$36.21	$5.00	$1.09	$0.36	$0.00	$7.24	$0.00	$0.00	$0.00	$49.90	$68.00
7th 1000 Hrs	90.01	$38.34	$5.00	$1.15	$0.38	$0.00	$7.67	$0.00	$0.00	$0.00	$52.54	$71.70

Special Calculation Note : No special calculations for this skilled craft wage rate are required at this time.

Ratio :

2 Journeymen to 1 Apprentice

Jurisdiction (* denotes special jurisdictional note) :

ASHTABULA, CUYAHOGA, GEAUGA, LAKE, LORAIN

Special Jurisdictional Note :

Details :

A groundman when directed shall assist a Journeymen in the performance of his/her work on the ground, including the use of hand tools. Under no circumstances shall this classification climb poles, towers, ladders, or work from an elevated platform or bucket truck. This classification shall not perform work normally assigned to an apprentice lineman. There shall be no more than one (1) Groundman for each two (2) Journeyman except when performing DOT Traffic Signal or Highway lighting work where the ratio can be two (2) Groundman for each Journeyman or Operator.

Prevailing Wage Rate
Skilled Crafts

Name of Union: Electrical Local 71 Cleveland Municipal Power & Transit

Change # : LCON1-2015fbLoc71Clev

Craft : Lineman Effective Date : 03/31/2015 Last Posted : 03/31/2015

	BHR		Fringe Benefit Payments						Irrevocable Fund		Total PWR	Overtime Rate
			H&W	Pension	App Tr.	Vac.	Annuity	Other	LECET (*)	MISC (*)		
Classification												
Electrical Lineman	$40.48		$5.00	$1.21	$0.40	$0.00	$8.10	$0.00	$0.00	$0.00	$55.19	$75.43
Cable Splicer	$40.48		$5.00	$1.21	$0.40	$0.00	$8.10	$0.00	$0.00	$0.00	$55.19	$75.43
Equip. Operator	$36.43		$5.00	$1.09	$0.36	$0.00	$7.29	$0.00	$0.00	$0.00	$50.17	$68.39
Groundman 0 to 12 months	$24.29		$5.00	$0.73	$0.24	$0.00	$4.86	$0.00	$0.00	$0.00	$35.12	$47.27
Groundman 1 Year or More	$28.34		$5.00	$0.85	$0.28	$0.00	$5.67	$0.00	$0.00	$0.00	$40.14	$54.31
Apprentice Linemen	**Percent**											
1st 1000 Hrs	60.00	$24.29	$5.00	$0.73	$0.24	$0.00	$4.86	$0.00	$0.00	$0.00	$35.12	$47.26
2nd 1000 Hrs	65.00	$26.31	$5.00	$0.79	$0.26	$0.00	$5.26	$0.00	$0.00	$0.00	$37.62	$50.78
3rd 1000 Hrs	70.01	$28.34	$5.00	$0.85	$0.28	$0.00	$5.67	$0.00	$0.00	$0.00	$40.14	$54.31
4th 1000 Hrs	75.00	$30.36	$5.00	$0.91	$0.30	$0.00	$6.07	$0.00	$0.00	$0.00	$42.64	$57.82
5th 1000 Hrs	80.00	$32.38	$5.00	$0.97	$0.32	$0.00	$6.48	$0.00	$0.00	$0.00	$45.15	$61.35
6th 1000 Hrs	85.00	$34.41	$5.00	$1.03	$0.34	$0.00	$6.88	$0.00	$0.00	$0.00	$47.66	$64.86
7th 1000 Hrs	90.00	$36.43	$5.00	$1.09	$0.36	$0.00	$7.29	$0.00	$0.00	$0.00	$50.17	$68.39

Special Calculation Note : No special calculations for this skilled craft wage rate are required at this time.

Ratio :

2 Journeymen to 1 Apprentice

Jurisdiction (* denotes special jurisdictional note) :

ASHTABULA, CUYAHOGA, GEAUGA, LAKE, LORAIN

Special Jurisdictional Note :

Details :

A groundman when directed shall assist a Journeymen in the performance of his/her work on the ground, including the use of hand tools. Under no circumstances shall this classification climb poles, towers, ladders, or work from an elevated platform or bucket truck. This classification shall not perform work normally assigned to an apprentice lineman. There shall be no more than one (1) Groundman for each two (2) Journeyman except when performing DOT Traffic Signal or Highway lighting work where the ratio can be two (2) Groundman for each Journeyman or Operator.

Prevailing Wage Rate
Skilled Crafts

Name of Union: Electrical Local 71 High Tension Pipe Type Cable

Change # : LCN01-2015fbLoc7

Craft : Lineman Effective Date : 03/11/2015 Last Posted : 03/11/2015

Classification	BHR	Fringe Benefit Payments						Irrevocable Fund		Total PWR	Overtime Rate
		H&W	Pension	App Tr.	Vac.	Annuity	Other	LECET (*)	MISC (*)		
Electrical Lineman	$39.19	$5.00	$1.18	$0.39	$0.00	$8.62	$0.30	$0.00	$0.00	$54.68	$74.28
Certified Lineman Welder	$39.19	$5.00	$1.18	$0.39	$0.00	$8.62	$0.30	$0.00	$0.00	$54.68	$74.28
Certified Cable Splicer	$39.19	$5.00	$1.18	$0.39	$0.00	$8.62	$0.30	$0.00	$0.00	$54.68	$74.28
Operator A	$31.27	$5.00	$0.94	$0.31	$0.00	$6.88	$0.30	$0.00	$0.00	$44.70	$60.34
Operator B	$28.31	$5.00	$0.85	$0.28	$0.00	$6.23	$0.30	$0.00	$0.00	$40.97	$55.13
Operator C	$25.34	$5.00	$0.76	$0.25	$0.00	$5.57	$0.30	$0.00	$0.00	$37.22	$49.89
Groundman 0-12 months Exp	$19.60	$5.00	$0.59	$0.20	$0.00	$4.31	$0.30	$0.00	$0.00	$30.00	$39.80
Groundman 0-12 months Exp w/CDL	$21.55	$5.00	$0.65	$0.22	$0.00	$4.74	$0.30	$0.00	$0.00	$32.46	$43.24
Groundman 1 yr or more	$21.55	$5.00	$0.65	$0.22	$0.00	$4.74	$0.30	$0.00	$0.00	$32.46	$43.24
Groundman 1 yr or more w/CDL	$25.47	$5.00	$0.76	$0.25	$0.00	$5.50	$0.30	$0.00	$0.00	$37.28	$50.01
Equipment Mechanic A	$31.27	$5.00	$0.94	$0.31	$0.00	$6.88	$0.30	$0.00	$0.00	$44.70	$60.34
Equipment Mechanic B	$28.31	$5.00	$0.85	$0.28	$0.00	$6.23	$0.30	$0.00	$0.00	$40.97	$55.13
	$25.34	$5.00	$0.76	$0.25	$0.00	$5.57	$0.30	$0.00	$0.00	$37.22	$49.89

Equipment Mechanic C												
X-Ray Technician	$39.19		$5.00	$1.18	$0.39	$0.00	$8.62	$0.30	$0.00	$0.00	$54.68	$74.28
Apprentice	**Percent**											
1st 1000 hrs	60.00	$23.51	$5.00	$0.71	$0.24	$0.00	$5.17	$0.30	$0.00	$0.00	$34.93	$46.69
2nd 1000 hrs	65.00	$25.47	$5.00	$0.76	$0.25	$0.00	$5.60	$0.30	$0.00	$0.00	$37.38	$50.12
3rd 1000 hrs	70.00	$27.43	$5.00	$0.82	$0.27	$0.00	$6.03	$0.30	$0.00	$0.00	$39.85	$53.57
4th 1000 hrs	75.00	$29.39	$5.00	$0.88	$0.29	$0.00	$6.47	$0.30	$0.00	$0.00	$42.33	$57.03
5th 1000 hrs	80.00	$31.35	$5.00	$0.94	$0.31	$0.00	$6.90	$0.30	$0.00	$0.00	$44.80	$60.48
6th 1000 hrs	85.00	$33.31	$5.00	$1.00	$0.33	$0.00	$7.33	$0.30	$0.00	$0.00	$47.27	$63.93
7th 1000 hrs	90.00	$35.27	$5.00	$1.06	$0.35	$0.00	$7.76	$0.30	$0.00	$0.00	$49.74	$67.38

Special Calculation Note : Other is Health Retirement Account

Operator "A"
John Henry Rock Drill, D-6 (or equivalent) and above, Trackhoe Digger, (320 Track excavator), Cranes (greater then 25 tons and less than 45 tons).

Operator "B"
Cranes (greater than 6 tons and up to 25 tons), Backhoes, Road Tractor, Dozer up to D-5, Pressure Digger- wheeled or tracked, all Tension wire Stringing equipment.

Operator "C"
Trench, Backhoe, Riding type vibratory Compactor, Ground Rod Driver, Boom Truck (6 ton & below), Skid Steer Loaders, Material Handler.

*All Operators of cranes 45 ton or larger shall be paid the journeyman rate of pay. $0.30 is for Health Retirement Account.

Ratio :

1 Journeyman to 1 Apprentice

Jurisdiction (* denotes special jurisdictional note) :
ADAMS, ASHLAND, ASHTABULA, ATHENS, AUGLAIZE, BELMONT, BROWN, BUTLER, CARROLL, CHAMPAIGN, CLARK, CLERMONT, CLINTON, COLUMBIANA, COSHOCTON, CRAWFORD, CUYAHOGA, DARKE, DELAWARE, FAIRFIELD, FAYETTE, FRANKLIN, GALLIA, GEAUGA, GREENE, GUERNSEY, HAMILTON, HARRISON,

HIGHLAND, HOCKING, HOLMES, JACKSON, JEFFERSON, KNOX, LAKE, LAWRENCE, LICKING, LOGAN, LORAIN, MADISON, MAHONING, MARION, MEDINA, MEIGS, MERCER, MIAMI, MONROE, MONTGOMERY, MORGAN, MORROW, MUSKINGUM, NOBLE, PERRY, PICKAWAY, PIKE, PORTAGE, PREBLE, RICHLAND, ROSS, SCIOTO, SHELBY, STARK, SUMMIT, TRUMBULL, TUSCARAWAS, UNION, VINTON, WARREN, WASHINGTON, WAYNE

Special Jurisdictional Note :

Details :

Heli - Arc Welding will be paid $.30 above Journeyman rate. Additional compensation of 10% over the Journeyman Lineman and Journeyman Technician for performing work on structures outside of buildings such as water towers, smoke stacks, radio and television towers, more than 75' above the ground.

Prevailing Wage Rate
Skilled Crafts

Name of Union: Electrical Local 71 Outside Utility Power

Change # : LCN01-2015fbLoc7

Craft : Lineman Effective Date : 03/11/2015 Last Posted : 03/11/2015

Classification	BHR	Fringe Benefit Payments						Irrevocable Fund		Total PWR	Overtime Rate
		H&W	Pension	App Tr.	Vac.	Annuity	Other	LECET (*)	MISC (*)		
Electrical Lineman	$37.17	$5.00	$1.12	$0.37	$0.00	$8.18	$0.30	$0.00	$0.00	$52.14	$70.72
Substation Technician	$37.17	$5.00	$1.12	$0.37	$0.00	$8.18	$0.30	$0.00	$0.00	$52.14	$70.72
Cable Splicer	$38.89	$5.00	$1.17	$0.39	$0.00	$8.56	$0.30	$0.00	$0.00	$54.31	$73.75
Operator A	$33.42	$5.00	$1.00	$0.33	$0.00	$7.35	$0.30	$0.00	$0.00	$47.40	$64.11
Operator B	$29.65	$5.00	$0.89	$0.30	$0.00	$6.52	$0.30	$0.00	$0.00	$42.66	$57.48
Operator C	$24.01	$5.00	$0.72	$0.24	$0.00	$5.28	$0.30	$0.00	$0.00	$35.55	$47.56
Groundman 0-12 months Exp	$18.59	$5.00	$0.56	$0.19	$0.00	$4.09	$0.30	$0.00	$0.00	$28.73	$38.02
Groundman 0-12 months Exp w/CDL	$20.44	$5.00	$0.61	$0.20	$0.00	$4.50	$0.30	$0.00	$0.00	$31.05	$41.27
Groundman 1 yr or more	$20.44	$5.00	$0.61	$0.20	$0.00	$4.50	$0.30	$0.00	$0.00	$31.05	$41.27
Groundman 1 yr or more w/CDL	$24.16	$5.00	$0.72	$0.24	$0.00	$5.32	$0.30	$0.00	$0.00	$35.74	$47.82
Equipment Mechanic A	$29.65	$5.00	$0.89	$0.30	$0.00	$6.52	$0.30	$0.00	$0.00	$42.66	$57.48
Equipment Mechanic B	$26.84	$5.00	$0.81	$0.27	$0.00	$5.90	$0.30	$0.00	$0.00	$39.12	$52.54
Equipment Mechanic C	$24.01	$5.00	$0.72	$0.24	$0.00	$5.28	$0.30	$0.00	$0.00	$35.55	$47.56
	$26.45	$5.00	$0.79	$0.26	$0.00	$5.82	$0.30	$0.00	$0.00	$38.62	$51.84

Line Truck w/uuger												
Apprentice	Percent											
1st 1000 hrs	60.00	$22.30	$5.00	$0.67	$0.22	$0.00	$4.91	$0.30	$0.00	$0.00	$33.40	$44.55
2nd 1000 hrs	65.00	$24.16	$5.00	$0.72	$0.24	$0.00	$5.32	$0.30	$0.00	$0.00	$35.74	$47.82
3rd 1000 hrs	70.00	$26.02	$5.00	$0.78	$0.26	$0.00	$5.72	$0.30	$0.00	$0.00	$38.08	$51.09
4th 1000 hrs	75.00	$27.88	$5.00	$0.84	$0.28	$0.00	$6.13	$0.30	$0.00	$0.00	$40.43	$54.37
5th 1000 hrs	80.00	$29.74	$5.00	$0.89	$0.30	$0.00	$6.54	$0.30	$0.00	$0.00	$42.77	$57.63
6th 1000 hrs	85.00	$31.59	$5.00	$0.95	$0.33	$0.00	$6.95	$0.30	$0.00	$0.00	$45.12	$60.92
7th 1000 hrs	90.00	$33.45	$5.00	$1.00	$0.33	$0.00	$7.36	$0.30	$0.00	$0.00	$47.44	$64.17

Special Calculation Note : Other is Health Retirement Account
Operator "A"
John Henry Rock Drill, D-6 (or equivalent) and above, Trackhoe Digger, (320 Track excavator), Cranes (greater then 25 tons and less than 45 tons).

Operator "B"
Cranes (greater than 6 tons and up to 25 tons), Backhoes, Road Tractor, Dozer up to D-5, Pressure Digger- wheeled or tracked, all Tension wire Stringing equipment.

Operator "C"
Trench, Backhoe, Riding type vibratory Compactor, Ground Rod Driver, Boom Truck (6 ton & below), Skid Steer Loaders, Material Handler.

Ratio :

(1) Journeyman Lineman to (1) Apprentice

Jurisdiction (* denotes special jurisdictional note) :
ADAMS, ASHLAND, ASHTABULA, ATHENS, AUGLAIZE, BELMONT, BROWN, BUTLER, CARROLL, CHAMPAIGN, CLARK, CLERMONT, CLINTON, COLUMBIANA, COSHOCTON, CRAWFORD, CUYAHOGA, DARKE, DELAWARE, FAIRFIELD, FAYETTE, FRANKLIN, GALLIA, GEAUGA, GREENE, GUERNSEY, HAMILTON, HARRISON, HIGHLAND, HOCKING, HOLMES, JACKSON, JEFFERSON, KNOX, LAKE, LAWRENCE, LICKING, LOGAN, LORAIN, MADISON, MAHONING, MARION, MEDINA, MEIGS, MERCER, MIAMI, MONROE, MONTGOMERY, MORGAN, MORROW, MUSKINGUM, NOBLE, PERRY, PICKAWAY, PIKE, PORTAGE, PREBLE, RICHLAND, ROSS,

SCIOTO, SHELBY, STARK, SUMMIT,
TRUMBULL, TUSCARAWAS, UNION,
VINTON, WARREN, WASHINGTON, WAYNE

Special Jurisdictional Note : 0.30 is for Health Retirement Account.

Details :

Heli - Arc Welding will be paid $.30 above Journeyman rate. Additional compensation of 10% over the Journeyman Lineman and Journeyman Technician for performing work on structures outside of buildings such as water towers, smoke stacks, radio and television towers, more than 75' above the ground.

Prevailing Wage Rate
Skilled Crafts

Name of Union: Elevator Local 17

Change # : LCN01-2012jcLoc17

Craft : Elevator Effective Date : 05/30/2012 Last Posted : 05/30/2012

	BHR		Fringe Benefit Payments						Irrevocable Fund		Total PWR	Overtime Rate
			H&W	Pension	App Tr.	Vac.	Annuity	Other	LECET (*)	MISC (*)		
Classification												
Elevator Mechanic	$44.04		$11.02	$6.96	$0.55	$2.64	$5.00	$1.43	$0.00	$0.00	$71.64	$93.66
Helper	$30.83		$11.02	$6.96	$0.55	$1.85	$5.00	$0.99	$0.00	$0.00	$57.20	$72.61
0-6months Probation	50.00	$22.02	$0.00	$0.00	$0.00	$0.00	$0.00	$0.00	$0.00	$0.00	$22.02	$33.03
1st year	55.00	$24.22	$11.02	$6.96	$0.55	$1.42	$5.00	$0.78	$0.00	$0.00	$49.95	$62.06
2nd year	65.00	$28.63	$11.02	$6.96	$0.55	$1.67	$5.00	$0.92	$0.00	$0.00	$54.75	$69.06
3rd year	70.00	$30.83	$11.02	$6.96	$0.55	$1.80	$5.00	$0.99	$0.00	$0.00	$57.15	$72.56
4th year and Assistant Mechanic	80.00	$35.23	$11.02	$6.96	$0.55	$2.06	$5.00	$1.14	$0.00	$0.00	$61.96	$79.58

Special Calculation Note : Vacation 6% for employees under 5 years based on regular hourly rate for all hours worked. 8% for employees over 5 years based on regular hourly rate for all hours worked. Other is Holiday Pay

Ratio :

1 Journeyman to 1 Apprentice.

Jurisdiction (* denotes special jurisdictional note) :

ASHTABULA, CUYAHOGA, ERIE, GEAUGA, LAKE, LORAIN

Special Jurisdictional Note :

Details :

Prevailing Wage Rate
Skilled Crafts

Name of Union: Glazier Local 181

Change # : LCN01-2014fbLoc181

Craft : Glazier Effective Date : 05/01/2014 Last Posted : 04/30/2014

	BHR		Fringe Benefit Payments						Irrevocable Fund		Total PWR	Overtime Rate
			H&W	Pension	App Tr.	Vac.	Annuity	Other	LECET (*)	MISC (*)		
Classification												
Glazier	$30.49		$5.57	$8.31	$0.30	$0.00	$0.00	$0.00	$0.00	$0.00	$44.67	$59.92
Apprentice	Percent											
1st 6 months	40.00	$12.20	$5.57	$0.68	$0.30	$0.00	$0.00	$0.00	$0.00	$0.00	$18.75	$24.84
2nd 6 months	45.00	$13.72	$5.57	$0.68	$0.30	$0.00	$0.00	$0.00	$0.00	$0.00	$20.27	$27.13
3rd 6 months	50.00	$15.25	$5.57	$3.76	$0.30	$0.00	$0.00	$0.00	$0.00	$0.00	$24.87	$32.50
4th 6 months	55.00	$16.77	$5.57	$4.06	$0.30	$0.00	$0.00	$0.00	$0.00	$0.00	$26.70	$35.08
5th 6 months	60.00	$18.29	$5.57	$4.37	$0.30	$0.00	$0.00	$0.00	$0.00	$0.00	$28.53	$37.68
6th 6 months	70.00	$21.34	$5.57	$4.99	$0.30	$0.00	$0.00	$0.00	$0.00	$0.00	$32.20	$42.87
7th 6 months	80.00	$24.39	$5.57	$5.60	$0.30	$0.00	$0.00	$0.00	$0.00	$0.00	$35.86	$48.06
8th 6 months	90.00	$27.44	$5.57	$6.22	$0.30	$0.00	$0.00	$0.00	$0.00	$0.00	$39.53	$53.25

Special Calculation Note : No special calculations for this classification.

Ratio :

3 Journeymen to 1 Apprentice

Jurisdiction (* denotes special jurisdictional note) :
ASHTABULA, CUYAHOGA, ERIE*, GEAUGA, HURON*, LAKE, LORAIN, MEDINA*, PORTAGE*, SUMMIT*

Special Jurisdictional Note : Start at the intersection of Route 305 and the eastern boundary line of Portage County.Follow Route 305 west onto Route 82, follow Route 82 west to the intersection of Routes 82,8 and 271, follow Route 271 south to Medina County line west to Route 94, follow Route 94 south to Route 303, follow Route 303 west to Route 252, follow Route 252 south to Route 18, follow Route 18 west to Route 301, follow 301 south to Route 162, follow Route 162 west to Route 58, follow Route 58 south to the Ashland County line, follow the Ashland County line west and then north along the line to Route 18, west onto Route 20, follow Route 20 west to Route 4, follow Route 4 north to Lake Erie. Local 181 has the jurisdiction on all projects built on the property which borders on the above Routes and/or intersections, wherever a County line is the divider between Local 181 and another Union, the jurisdiction is only to the county line.

Details :

High Pay: All work is defined for the purpose of the agreement as being work which requires that the employee be supported by equipment that hangs from or suspends from the wall or roof of a building or structure. This work shall receive and additional $1.25 per hour.

Prevailing Wage Rate
Skilled Crafts

Name of Union: Ironworker Local 17

Change # : LCN01-2015fbLoc17

Craft : Ironworker Effective Date : 10/07/2015 Last Posted : 10/07/2015

	BHR		Fringe Benefit Payments						Irrevocable Fund		Total PWR	Overtime Rate
			H&W	Pension	App Tr.	Vac.	Annuity	Other	LECET (*)	MISC (*)		
Classification												
Ironworker	$31.30		$6.70	$10.00	$0.48	$1.70	$2.75	$0.00	$0.00	$0.00	$52.93	$68.58
Apprentice	Percent											
1st 6 Months	50.00	$15.65	$6.70	$10.00	$0.48	$1.70	$2.75	$0.00	$0.00	$0.00	$37.28	$45.10
2nd 6 Months	55.00	$17.22	$6.70	$10.00	$0.48	$1.70	$2.75	$0.00	$0.00	$0.00	$38.85	$47.45
2nd Year 1st 6 Months	70.00	$21.91	$6.70	$10.00	$0.48	$1.70	$2.75	$0.00	$0.00	$0.00	$43.54	$54.50
2nd Year 2nd 6 Months	75.00	$23.48	$6.70	$10.00	$0.48	$1.70	$2.75	$0.00	$0.00	$0.00	$45.10	$56.84
3rd Year 1st 6 Months	80.00	$25.04	$6.70	$10.00	$0.48	$1.70	$2.75	$0.00	$0.00	$0.00	$46.67	$59.19
3rd Year 2nd 6 Months	85.00	$26.60	$6.70	$10.00	$0.48	$1.70	$2.75	$0.00	$0.00	$0.00	$48.24	$61.54
4th Year 1st 6 Months	90.00	$28.17	$6.70	$10.00	$0.48	$1.70	$2.75	$0.00	$0.00	$0.00	$49.80	$63.89
4th Year 2nd 6 Months	95.00	$29.73	$6.70	$10.00	$0.48	$1.70	$2.75	$0.00	$0.00	$0.00	$51.37	$66.23

Special Calculation Note : No special calculations for this skilled craft wage rate are required at this time.

Ratio :

	Jurisdiction (* denotes special jurisdictional note) :
4 Journeymen to 1 Apprentice on Structural Work 3 Journeymen to 1 Apprentice on Rod Work 2 Journeymen to 1 Apprentice on ALL Finishing, Steel Sash, Stairway and Ornamental Work	ASHTABULA, CUYAHOGA, ERIE, GEAUGA, HURON, LAKE, LORAIN, MEDINA, PORTAGE, SUMMIT

Special Jurisdictional Note : West Boundary Line :Sandusky, Ohio: Boundary lines between Local 17 & Local 55 are as follows: Columbus Ave north to Sandusky Bay (and/or Lake Erie): Columbus Ave South to present Route 4: Route 4 South to present Route 99: from Route 99 south to old Route 224-all territory to the west of the boundary line to be the jurisdiction of Local 55.All territory to the East of the boundary line to be the jurisdiction of Local 17.Kelly's Island to be within jurisdiction of Local 17.All bridges,tunnels,viaducts,etc, relative to these boundary lines shall be the jurisdiction of Local 17
South Boundary Line:Canton, Ohio: Boundary lines between Local 17 & Local 550 are as follows: All territory north of old Route 224 line to be the jurisdiction of Local 17. All bridges,tunnels,viaducts,signs,etc, relative to old Route 224 line to be within the jurisdiction of Local 17. All territory south of old Route 224 line is to be within the jurisdiction of Local 550, except for everything within the city limits of Barberton which shall be the jurisdiction of Local 17.
Reading from West to East: Route old 224 line: Greenwich Ave-Wooster Road or East Ave. Route old 224 line: New 224 line including Cloverleaf: East Waterloo Road: New 224 line-Attwood Road-Old 224. This will be considered to be the old Route 224 line,except for the city limits of Barberton, Ohio which shall be the jurisdiction of Local 17
Southeast Boundary : Between local 17 and Local 207 are as follows: West of a line from Middlefield to Shalersville to Deerfield, shall be under the jurisdiction of local 17. East of a line from Middlefield, to Shalersville to Deerfield, shall be under the jurisdiction of Local 207. Local 17 & Local 207 have agreed that the Ohio County of Ashtabula shall be as follows: Everything North of Route 6, starting at the Geauga County line, proceeding east to State Route 45, shall be under the jurisdiction of Local 17. Everything South, starting at the Geauga County line shall be under local 207.
North Boundary: The East boundary line and the West boundary line continuing North halfway across Lake Erie.

Details :

Prevailing Wage Rate
Skilled Crafts

Name of Union: Labor Local 310

Change # : LCN01-2014fbLabor310

Craft : Laborer Effective Date : 08/14/2014 Last Posted : 08/14/2014

	BHR		Fringe Benefit Payments						Irrevocable Fund		Total PWR	Overtime Rate
			H&W	Pension	App Tr.	Vac.	Annuity	Other	LECET (*)	MISC (*)		
Classification												
Laborer Group 1	$24.69		$4.77	$9.20	$0.10	$0.00	$2.60	$0.45	$0.00	$0.00	$41.81	$54.16
Group 2	$25.17		$4.77	$9.20	$0.10	$0.00	$2.60	$0.45	$0.00	$0.00	$42.29	$54.88
Group 3	$24.94		$4.77	$9.20	$0.10	$0.00	$2.60	$0.45	$0.00	$0.00	$42.06	$54.53
Group 4	$21.59		$4.77	$9.20	$0.10	$0.00	$2.60	$0.45	$0.00	$0.00	$38.71	$49.51
Group 5	$19.09		$4.77	$9.20	$0.10	$0.00	$2.60	$0.45	$0.00	$0.00	$36.21	$45.76
Group 6	$21.24		$4.77	$9.20	$0.10	$0.00	$2.60	$0.45	$0.00	$0.00	$38.36	$48.98
Group 7	$25.19		$4.77	$9.20	$0.10	$0.00	$2.60	$0.45	$0.00	$0.00	$42.31	$54.91
Group 8	$25.34		$4.77	$9.20	$0.10	$0.00	$2.60	$0.45	$0.00	$0.00	$42.46	$55.13
Group 9	$19.54		$4.77	$9.20	$0.10	$0.00	$2.60	$0.45	$0.00	$0.00	$36.66	$46.43
Group 10	$15.54		$4.77	$9.20	$0.10	$0.00	$2.60	$0.45	$0.00	$0.00	$32.66	$40.43
Group 11	$24.84		$4.77	$9.20	$0.10	$0.00	$2.60	$0.45	$0.00	$0.00	$41.96	$54.38
Group 12	$25.08		$4.77	$9.20	$0.10	$0.00	$2.60	$0.45	$0.00	$0.00	$42.20	$54.74
Group 13	$26.19		$4.77	$9.20	$0.10	$0.00	$2.60	$0.45	$0.00	$0.00	$43.31	$56.41
Apprentice	Percent											
1-1000 hours	60.00	$14.81	$4.77	$9.20	$0.10	$0.00	$2.60	$0.45	$0.00	$0.00	$31.93	$39.34
1001-2000 hours	70.00	$17.28	$4.77	$9.20	$0.10	$0.00	$2.60	$0.45	$0.00	$0.00	$34.40	$43.04
2001-3000 hours	80.00	$19.75	$4.77	$9.20	$0.10	$0.00	$2.60	$0.45	$0.00	$0.00	$36.87	$46.75
3001-4000 hours	90.00	$22.22	$4.77	$9.20	$0.10	$0.00	$2.60	$0.45	$0.00	$0.00	$39.34	$50.45
4001 plus	100.00	$24.69	$4.77	$9.20	$0.10	$0.00	$2.60	$0.45	$0.00	$0.00	$41.81	$54.16

Special Calculation Note : Other is a Supplemental Unemployment Benefit (SUB).

Ratio :

1 Journeymen to 1 Apprentice
4 Journeymen to 1 Apprentice

Jurisdiction (* denotes special jurisdictional note) :
CUYAHOGA, GEAUGA, LAKE

Special Jurisdictional Note :

Details :
Group 1 - Building and construction Laborers and Tenders; Asbestos Removal - hazardous materials; unloading of furniture and fixtures.

Group 2 - Gunite Operating (Machines of all type).

Group 3 - Laborers on swinging scaffolds; air track and wagon drill.

Group 4 - Drywall stocking and handling.

Group 5 - General Landscaping.

Group 6 - Final Clean-up (must perform clean-up duties for entire work shift, and excludes demolition work).

Group 7 - Blasters, Shooters, Caissons, Well Cylinder, Cofferdams, Mine Workers without air, acid brick tenders.

Group 8 - Top man on free standing radial stack; bellman and bottom man in blast furnace and stove.

Group 9 - Sewer jet.

Group 10 - Heat tender.

Group 11 - Firebrick.

Group 12 - Mason tender handling carbon block and bottom block for blast furnace stoves, stacks etc.

Group 13 - Lansing Burners.

Prevailing Wage Rate
Skilled Crafts

Name of Union: Laborer HevHwy 1A

Change # : LCN01-2015fbHevHwy1A

Craft : Laborer Group 1 Effective Date : 05/01/2015 Last Posted : 04/15/2015

	BHR		Fringe Benefit Payments						Irrevocable Fund		Total PWR	Overtime Rate
			H&W	Pension	App Tr.	Vac.	Annuity	Other	LECET (*)	MISC (*)		
Classification												
Laborer Group 1	$30.38		$6.40	$3.00	$0.45	$0.00	$0.00	$0.10	$0.00	$0.00	$40.33	$55.52
Group 2	$30.55		$6.40	$3.00	$0.45	$0.00	$0.00	$0.10	$0.00	$0.00	$40.50	$55.78
Group 3	$30.88		$6.40	$3.00	$0.45	$0.00	$0.00	$0.10	$0.00	$0.00	$40.83	$56.27
Group 4	$31.33		$6.40	$3.00	$0.45	$0.00	$0.00	$0.10	$0.00	$0.00	$41.28	$56.95
Watch Person	$21.45		$6.40	$3.00	$0.45	$0.00	$0.00	$0.10	$0.00	$0.00	$31.40	$42.13
Apprentice	Percent											
0-1000 hrs	60.00	$18.23	$6.40	$3.00	$0.45	$0.00	$0.00	$0.10	$0.00	$0.00	$28.18	$37.29
1001-2000 hrs	70.00	$21.27	$6.40	$3.00	$0.45	$0.00	$0.00	$0.10	$0.00	$0.00	$31.22	$41.85
2001-3000 hrs	80.00	$24.30	$6.40	$3.00	$0.45	$0.00	$0.00	$0.10	$0.00	$0.00	$34.25	$46.41
3001-4000 hrs	90.00	$27.34	$6.40	$3.00	$0.45	$0.00	$0.00	$0.10	$0.00	$0.00	$37.29	$50.96
More than 4000 hrs	100.00	$30.38	$6.40	$3.00	$0.45	$0.00	$0.00	$0.10	$0.00	$0.00	$40.33	$55.52

Special Calculation Note : Watchman have no Apprentices. Other is Labor Management

Ratio :

1 Journeymen to 1 Apprentice
4 Journeymen to 1 Apprentice thereafter

Jurisdiction (* denotes special jurisdictional note) :
LAKE

Special Jurisdictional Note : Hod Carriers and Common Laborers - Heavy, Highway, Sewer, Waterworks, Utility, Airport, Railroad, Industrial and Building Site, Sewer Plant, Waste Water Treatment Facilities Construction

Details :

Group 1

Laborer (Construction); Plant Laborer or Yardman, Right-of-way Laborer, Landscape Laborer, Highway Lighting Worker, Signalization Worker, (Swimming) Pool Construction Laborer, Utility Man, Bridge Man, Handyman, Joint Setter, Flagperson, Carpenter Helper, Waterproofing Laborer, Slurry Seal, Seal Coating, Surface Treatment or Road Mix Laborer, Riprap Laborer & Grouter, Asphalt Laborer, Dump Man (batch trucks), Guardrail & Fence Installer, Mesh Handler & Placer, Concrete Curing Applicator, Scaffold Erector, Sign Installer, Hazardous Waste (level D), Diver Helper, Zone Person and Traffic Control.

Group 2

Asphalt Raker, Screwman or Paver, Concrete Puddler, Kettle Man (pipeline), All Machine-Driven Tools (Gas, Electric, Air), Mason Tender, Brick Paver, Mortar Mixer, Skid Steer, Sheeting & Shoring Person, Surface Grinder Person, Screedperson, Water Blast, Hand Held Wand, Power Buggy or Power Wheelbarrow, Paint Striper, Plastic fusing Machine Operator, Rodding Machine Operator, Pug Mill Operator, Operator of All Vacuum Devices Wet or Dry, Handling of all Pumps 4 inches and under (gas, air or electric), Bottom Person, Welder Helper (pipeline), Concrete Saw Person, Cutting with Burning Torch, Pipe Layer, Hand Spiker (railroad), Underground Person (working in sewer and waterline, cleaning, repairing and reconditioning). Tunnel Laborer (without air), Caisson, Cofferdam (below 25 feet deep), Air Track and Wagon Drill, Sandblaster Nozzle Person, Hazardous Waste (level B), Lead Abatement, Hazardous Waste (level C)

Group 3

Blast and Powder Person, Muckers (with miners), Wrencher (mechanical joints & utility pipeline), Yarner, Top Lander, Hazardous Waste (level A), Concrete Specialist, Curb Setter and Cutter, Concrete Crew in Tunnels. Utility pipeline Tappers, Waterline, Caulker, Signal Person, Grade Checker

Group 4

Miner, Welder, Gunite Nozzle Person

Prevailing Wage Rate
Skilled Crafts

Name of Union: Operating Engineers - Building Local 18 - Zone I (A)

Change # : LCN01-2014jcLoc18

Craft : Operating Engineer Effective Date : 05/07/2014 Last Posted : 05/07/2014

	BHR		Fringe Benefit Payments						Irrevocable Fund		Total PWR	Overtime Rate
			H&W	Pension	App Tr.	Vac.	Annuity	Other	LECET (*)	MISC (*)		
Classification												
Operator Class 1	$35.71		$7.16	$6.00	$0.67	$0.00	$0.00	$0.07	$0.00	$0.00	$49.61	$67.46
Class 2	$35.56		$7.16	$6.00	$0.67	$0.00	$0.00	$0.07	$0.00	$0.00	$49.46	$67.24
Class 3	$34.11		$7.16	$6.00	$0.67	$0.00	$0.00	$0.07	$0.00	$0.00	$48.01	$65.06
Class 4	$33.33		$7.16	$6.00	$0.67	$0.00	$0.00	$0.07	$0.00	$0.00	$47.23	$63.90
Class 5	$33.01		$7.16	$6.00	$0.67	$0.00	$0.00	$0.07	$0.00	$0.00	$46.91	$63.42
Class 6	$25.93		$7.16	$6.00	$0.67	$0.00	$0.00	$0.07	$0.00	$0.00	$39.83	$52.79
Class 7	$36.21		$7.16	$6.00	$0.67	$0.00	$0.00	$0.07	$0.00	$0.00	$50.11	$68.21
Class 8	$36.46		$7.16	$6.00	$0.67	$0.00	$0.00	$0.07	$0.00	$0.00	$50.36	$68.59
Class 9	$36.71		$7.16	$6.00	$0.67	$0.00	$0.00	$0.07	$0.00	$0.00	$50.61	$68.96
Apprentice	**Percent**											
1st Year	59.75	$21.34	$7.16	$6.00	$0.67	$0.00	$0.00	$0.07	$0.00	$0.00	$35.24	$45.91
2nd Year	69.69	$24.89	$7.16	$6.00	$0.67	$0.00	$0.00	$0.07	$0.00	$0.00	$38.79	$51.23
3rd Year	79.67	$28.45	$7.16	$6.00	$0.67	$0.00	$0.00	$0.07	$0.00	$0.00	$42.35	$56.58
4th Year	89.60	$32.00	$7.16	$6.00	$0.67	$0.00	$0.00	$0.07	$0.00	$0.00	$45.90	$61.89

Special Calculation Note : Other: Education & Safety Fund is $0.04 per hour.

Ratio :

For every (3) Operating Engineer Journeymen employed by the company ,there may be employed (1) Registered Apprentice. An apprentice, while employed as part of a crew per Article VIII, paragraph77, will not be subject to

Jurisdiction (* denotes special jurisdictional note) :
ASHTABULA, CUYAHOGA, ERIE, GEAUGA, HURON, LAKE, LORAIN, MEDINA

the apprenticeship ratios in this collective bargaining agreement.

Special Jurisdictional Note :

Details :
Note: There will be a 10% increase for the apprentices on top of the percentages listed above provided they are operating mobile equipment. Mechanic Trainees will receive 10% increase if required to have CDL

Class 1 - " Boiler Operators, Compressor Operators, Hydraulic Pumps & Power Pacs when mounted on a crane or regardless of where said equipment is mounted (piggy-back operator)" Boom Trucks (all types); Cableways Cherry Pickers; Combination - Concrete Mixers & Towers; Concrete Pumps; Cranes (all types) Derricks (all types); Draglines Dredges (dipper, clam or suction) 3-man crew; Elevating Graders or Euclid Loaders; Floating Equipment; Gradalls; Helicopter Operators; hoisting building materials; Helicopter Winch Operators, Hoisting building materials; Hoes (All types) Hoists (with two or more drums in use): Lift Slab or Panel Jack Operators; Locomotives (all types); Maintenance Engineers (Mechanic and/or Welder); Mixers, paving (multiple drum); Mobile Concrete Pumps, with booms, Panelboards, (all types on site); Pile Drivers; Power Shovels; Rotary Drills (all), used on caissons work, wells (all types), Geothermal work and sub-structure work; Side Booms; Slip Form Pavers; Straddle Carriers (Building Construction on site); Tug Boats. Rough Terrain Fork-lift with Winch/Hoist (when used as a crane), Compact Cranes (all types), track or rubber over 4,000 pound capacity,self-erecting cranes:stationary,track or truck (all configurations) bucket trench machines (over 24 " wide). A Frames, Robotics Equipment Operator/Mechanic. "Boiler Operators, Compressor Operators, Hydraulic Pumps & Power Pacs when mounted on a crane or regardless of where said equipment is mounted (piggy-back operator)"

Class 2 - Asphalt Pavers; Bulldozers; CMI type Equipment;; Endloaders; Kolman-type Loaders (Dirt Loading); Lead Greasemen; Mucking Machines; Power Graders; Power Scoops; Power Scrapers; Push Cats; Vermeer Type Concrete Saw, All rotomills. Horizontal Directional Drill Locator, Horizontal Directional Drill Operator, Instrument Man.

Class 3 - Air Compressors, Pressurizing Shafts or Tunnels; All Asphalt Rollers; Power Boilers (over 15 lbs pressure); Fork Lifts ; Hoists (with one drum); House Elevators (except those automatic call button controlled); Man Lifts; Mud Jacks; Pressure Grouting; Pump Operators (installing or operating Well Points or other types of Dewatering Systems); Trenchers (24" and under); Utility Operators. Laser Screeds and like equipment, Hydro Excavator (all types C rate) (F rate if a second person is needed) Helper rate, Portable Hydraulic Gantry (lift system C Rate) (F rate if a second person is needed.

Class 4 - Compressors, on building construction; Conveyors, used for handling building materials; Mixers, one bag capacity (side loader); Mixers, capacity more than one bag; Generators: Gunite Machines; Pavement Breakers (hydraulic or cable); Post Drivers; Post Hole Diggers; Road Widening Trenchers; Rollers; Welder Operators.

Class 5 - Backfillers and Tampers, Batch Plants, Bar and Joint Installing Machines, Bull Floats, Burlap and Curing Machines, Cleaning Machine Operator (decontamination included) Clefplanes, Concrete Spreading Machines, Crushers, Deckhands, Drum Fireman (asphalt), Farm-type, Tractor, pulling attachments, Finishing Machines, Forklifts (masonry work only) Form Trenchers, High Pressure Pumps (over 1/2" discharge) Hydro Seeders, Pumps (4" and over discharge), provided it is not part of a de-watering stystem discharged into a common header, Self-Propelled Power Spreaders, Self-Propelled Sub Graders, Submersible Pump (4" and over discharge), provided it is not part of a dewatering system discharged into a common header, Tire Repairman Tractors, pulling sheepfoot rollers or graders, Vibratory Compactors with integral power.

Class 6 - Power Boilers (less than 15 lbs. pressure); Inboard/outboard Motor Boat Launches; Light Plant Operators; Power Driven Heaters (oil fired); Power Scrubbers; Power Sweepers; Pumps (under 4 inch discharge); Signalmen, Submersible Pumps (under 4 inch discharge). and Allen Screed Concrete Paver, Fueling & greasing (plus $3.00), compact cranes: track or rubber under 4,000 pounds. Vac Alls, Apprentice/Helpers, Oiler, Barrier Moving Machines (additinal duty, paid same rate) Bobcat-type and/or Skid Steer Loader with any and all attachments, Geodimeter, Grade Checker Grinders (all), Planners (all types), Saw (concrete vermeer type). Rob Man. Backfillers and Tampers, Batch Plants, Bar and Joint Installing Machines, Bull Floats, Burlap and Curing Machines, Cleaning Machine Operator (decontamination included) Clefplanes, Concrete Spreading Machines, Crushers, Deckhands, Drum Fireman (asphalt), Farm-type Tractor, pulling attachments, Finishing Machines, Forklifts, (masonry work only) Form Trenchers, High Pressure Pumps (over 1/2" discharge) Hydro Seeders, Pumps (4" and over discharge), provided it is not part of a de-watering system discharged into a common header, Self-Propellled Power Spreaders, Self-Propelled Sub-Graders, Submersible Pumps (4" and over discharge), provided it is not part of a dewatering system discharged into a common header, Tire Repairmen Tractors, pulling sheepfoot rollers or graders, Vibratory Compactors with integral power.

Class 7 - Master Mechinic

Class 8 - Boom & Jib 150' - 180 feet and over

Class 9 - Boom & Jib 200' and over

Prevailing Wage Rate
Skilled Crafts

Name of Union: Operating Engineers - HevHwy I

Change # : LCN01-2015fbLoc18hevhwyI

Craft : Operating Engineer Effective Date : 05/20/2015 Last Posted : 05/20/2015

	BHR		Fringe Benefit Payments						Irrevocable Fund		Total PWR	Overtime Rate
			H&W	Pension	App Tr.	Vac.	Annuity	Other	LECET (*)	MISC (*)		
Classification												
Operator Class 1	$34.83		$7.41	$6.00	$0.75	$0.00	$0.00	$0.09	$0.00	$0.00	$49.08 ✓	$66.50
Class 2	$34.73		$7.41	$6.00	$0.75	$0.00	$0.00	$0.09	$0.00	$0.00	$48.98	$66.34
Class 3	$33.69		$7.41	$6.00	$0.75	$0.00	$0.00	$0.09	$0.00	$0.00	$47.94	$64.78
Class 4	$32.47		$7.41	$6.00	$0.75	$0.00	$0.00	$0.09	$0.00	$0.00	$46.72	$62.96
Class 5	$27.18		$7.41	$6.00	$0.75	$0.00	$0.00	$0.09	$0.00	$0.00	$41.43	$55.02
Class 6	$35.08		$7.41	$6.00	$0.75	$0.00	$0.00	$0.09	$0.00	$0.00	$49.33	$66.87
Class 7	$35.08		$7.41	$6.00	$0.75	$0.00	$0.00	$0.09	$0.00	$0.00	$49.33	$66.87
Class 8	$35.33		$7.41	$6.00	$0.75	$0.00	$0.00	$0.09	$0.00	$0.00	$49.58	$67.25
Great Lakes Floating Agreement												
Class 1	$39.70		$6.91	$6.00	$0.60	$0.00	$0.00	$0.04	$0.00	$0.00	$53.25	$73.10
Class 2A	$38.20		$6.91	$6.00	$0.60	$0.00	$0.00	$0.04	$0.00	$0.00	$51.75	$70.85
Class 2B	$38.20		$6.91	$6.00	$0.60	$0.00	$0.00	$0.04	$0.00	$0.00	$51.75	$70.85
Class 3	$34.00		$6.91	$6.00	$0.60	$0.00	$0.00	$0.04	$0.00	$0.00	$47.55	$64.55
Class 4	$28.30		$6.91	$6.00	$0.60	$0.00	$0.00	$0.04	$0.00	$0.00	$41.85	$56.00
Apprentice	**Percent**											
1st Year	50.02	$17.42	$7.41	$6.00	$0.75	$0.00	$0.00	$0.09	$0.00	$0.00	$31.67	$40.38
2nd Year	60.00	$20.90	$7.41	$6.00	$0.75	$0.00	$0.00	$0.09	$0.00	$0.00	$35.15	$45.60
3rd Year	70.00	$24.38	$7.41	$6.00	$0.75	$0.00	$0.00	$0.09	$0.00	$0.00	$38.63	$50.82
4th Year	80.00	$27.86	$7.41	$6.00	$0.75	$0.00	$0.00	$0.09	$0.00	$0.00	$42.11	$56.05
Field Mech Trainee												
1st year	49.88	$17.37	$7.41	$6.00	$0.75	$0.00	$0.00	$0.09	$0.00	$0.00	$31.62	$40.31
2nd year	59.83	$20.84	$7.41	$6.00	$0.75	$0.00	$0.00	$0.09	$0.00	$0.00	$35.09	$45.51
3rd year	69.80	$24.31	$7.41	$6.00	$0.75	$0.00	$0.00	$0.09	$0.00	$0.00	$38.56	$50.72
4th year	79.75	$27.78	$7.41	$6.00	$0.75	$0.00	$0.00	$0.09	$0.00	$0.00	$42.03	$55.92

Special Calculation Note : Other: Education & Safety Fund is $0.09 per hour.

Ratio :

For every (3) Operating Engineer Journeymen employed by the company , there may be employed (1) Registered Apprentice. An apprentice, while employed as part of a crew per Article VIII paragraph 65, will not be subject the apprenticeship ratios in this collective bargaining agreement. On jobs where maintenance engineers are to be employed, for every (2) Class 2 Mechanics there may be (1) Mechanic Trainee & so fourth. Mechanic Trainee rate is a percentage of Class 2 rate.

Jurisdiction (* denotes special jurisdictional note) :
ASHTABULA, CUYAHOGA, ERIE, GEAUGA, LAKE, LORAIN, MEDINA, PORTAGE, SUMMIT

Special Jurisdictional Note :

Details :
**Apprentices will receive a 10% increase on top of the percentages listed above provided they are operating mobile equipment. Mechanic Trainees will receive 10% if required to have a CDL.

Class 1 - Air Compressors on Steel Erection; Asphalt Plant Engineers (Cleveland District Only); Barrier Moving Machine; Boiler Operators, Compressor Operators, or Generators, when mounted on a rig: Boom Trucks (all types); Cableways; Cherry Pickers; Combination- Concrete mixers & Towers; Concrete Pumps; Concrete Plants (over 4 yd capacity); Cranes (all types); Derricks (all types); Draglines; Elevating Graders or Euclid Loaders; Gradalls; Helicopter Crew (Operator- hoist or winch); Hoes (all types); Hoisting Engines; Hoisting Engines, on shaft or tunnel work; Hydraulic Gantry (lifting system); Locomotives (standard guage); Maintenance Operators (class A); Mixers, paving (single or double drum); Piledriving Machines (all types); Power Shovels, Prentice Loader; Quad 9 (double pusher); Rail Tamper (with automatic lifting and aligning device); Refrigerating Machines (freezer operation); Rotary Drills, on caisson work; Side Booms; Slip Form Pavers; Tower Dericks; Trench Machines; Truck Mounted Concrete Pumps; Tug Boats; Tunnel Machines and /or Mining Machines; Wheel Excavators;Industrial-type tractors; Jet Engine - Dryer (D8 or D9) Diesel Tractors Mucking Machines; Multiple Scrapers; Tree Shreddes. Rough Terrain Fork-lift with Winch/Hoist; Compact Cranes,track or rubber over 4,000 pound capacity, self-erecting cranes:stationary,track or truck (all configurations) bucket trench machines (over 24 inches wide).

Class 2 - Asphalt Pavers; Automatic Subgrade Machines, self-propelled (CMI-type); Bobcat-type and /or skid steer loader with hoe attachment greater than 7000 lbs.; Boring Machine Operators (more than 48 inches); Bulldozers; ;Endloaders; Hydro Milling Machine; Kolman-type Loaders (production type-dirt); Lead Greasemen; Maintenance Operators, Class B (Portage and Summit Counties only); Pettibone-Rail Equipment; Power Graders; Power Scrapers; Push Cats; Lighting and Traffic Signal Installation Equipment includes all groups or classifications; Trench Machines (24inch wide and under); Vermeer Type Concrete saw. Material Transfer Equipment (Shuttle buggy) Asphalt All rotomills, grinders and planers of all types. Horizontal Directional Drill (Over 50,000 ft.lbs.thrust and over).

Class 3 - A-Frames; Air Compressors, on tunnel work (low Pressure); All Asphalt Rollers; Asphalt

Plant Engineers (Portage and Summit Counties only); Bobcat-type and/or skid steer loader with or without attachments; Power Boilers (15 lbs pressure and over); Highway Drills (all types); Pump Operators (installing or operating well Points); Pumps (4 inch and over discharge); Railroad Tie Inserter/Remover; Rotovator (lime-soil Stabilzer); Switch & Tie Tampers (without lifting and aligning device); Locomotives (narrow gage); Mixers, concrete (more than one bag capacity); Mixers, one bag capacity (side loader); Utilities Operators, (small equipment); Welding Machines and Generators; Material hoist/elevators. Articulating/straight bed end dumps if assigned (minus $4.00 per hour)

Class 4 - Ballast Re-loacator; Backfillers and Tampers; Batch Plant Operators; Bar and Joint Installing Machines; Boring Machine Operators (48 inch or less); Bull Floats; Burlap and Curing Machines; Concrete Plants (capacity 4 yd and under); Conveyors (highway); Concrete Saws (multiple); Crushers; Deckhands; Farm type tractors, with attachments (highway); Finishing Machines; Hydro Hammers; Hydro Seeders; Pavement Breakers (hydraulic or cable); Plant Mixers; Post Drivers; Post Hole Diggers; Power Brush Burners; Power Form Handling Equipment; Firemen, Floating Equipment (all types); Fork Lifts (highway), except masonry; Form Trenchers; Road Widening Trenchers; Rollers (brick, grade, macadam); Self-Propelled Power Spreaders; Self-Propelled Sub-Graders; Tractors, pulling sheepsfoot rollers or graders; Steam Firemen; Vibratory Compactors, with integral power.

Class 5 - Compressors (portable, Sewer, Heavy and Highway); Generators; Inboard-Outboard Motor Boat Launches; Masonry Fork Lifts; Oilers/Helpers; Power Driven Heaters (oil fired); Power Scrubbers; Power Sweepers; Pumps (under 4 inch discharge); Signalmen; Drum Fireman (in Asphalt Plant); Oil Heaters (Asphalt Plant); Tire Repairmen; VAC/ALLS; Fueling and greasing (plus $3.00), compact cranes; track or rubber under 4,000 pounds.

Class 6 - Master Mechanic

Class 7 - Crane Boom 150ft.- 180ft

Class 8 - Crane Boom over 180 ft.

GREAT LAKES FLOATING AGREEMENT
Class 1 -Diver,Wet Tender,Engineer,(hyd.Dredge), Craft Foreman (Master Mechanic)
Class 2A - Crane Backhoe Operator,Mechanic/Welder,Assistant Engineer (Hyd. Dredge), Leverman (Hyd Dredge) Diver Tender, Tug Operator (Tug 70T and over)
Class 2B - Friction Crane, Lattice Boom, any Crane Certification
Class 3-Maintenance of Crane (over 50T capacity) or Backhoe (115,000 lbs or more) Loader/Dozer and like equipment on Barge, Breakwater Wall, Slip/Dock Scow.
Class 4 - Deck Equipment Operator, (Machineryman/Fireman)(4 equipment Units or more), Deck Hand, Deck Tug Engineer, Crane Maintenance, 50T and under/Backhoe 115,000lbs or less, Assistant Tug Operator, Off Road Truck,

Prevailing Wage Rate
Skilled Crafts

Name of Union: Painter Local 505

Change # : LCN01-2014fbLoc505

Craft : Drywall Finisher Effective Date : 05/01/2014 Last Posted : 04/30/2014

	BHR		Fringe Benefit Payments						Irrevocable Fund		Total PWR	Overtime Rate
			H&W	Pension	App Tr.	Vac.	Annuity	Other	LECET (*)	MISC (*)		
Classification												
Painter Drywall Finisher	$29.49		$5.57	$4.10	$0.35	$0.00	$2.50	$0.00	$0.00	$0.00	$42.01	$56.76
Apprentice	**Percent**											
1st 6 months	45.00	$13.27	$5.57	$0.95	$0.35	$0.00	$0.00	$0.00	$0.00	$0.00	$20.14	$26.78
2nd 6 months	50.00	$14.75	$5.57	$0.95	$0.35	$0.00	$0.00	$0.00	$0.00	$0.00	$21.61	$28.99
3rd 6 months	55.00	$16.22	$5.57	$1.30	$0.35	$0.00	$1.38	$0.00	$0.00	$0.00	$24.82	$32.93
4th 6 months	60.00	$17.69	$5.57	$1.30	$0.35	$0.00	$1.50	$0.00	$0.00	$0.00	$26.41	$35.26
5th 6 months	65.00	$19.17	$5.57	$1.65	$0.35	$0.00	$1.63	$0.00	$0.00	$0.00	$28.37	$37.95
6th 6 months	70.00	$20.64	$5.57	$1.65	$0.35	$0.00	$1.75	$0.00	$0.00	$0.00	$29.96	$40.28
7th & 8th 6 months	80.00	$23.59	$5.57	$2.30	$0.35	$0.00	$2.00	$0.00	$0.00	$0.00	$33.81	$45.61

Special Calculation Note : No special calculation for this classification.

Ratio :

1 Apprentice to 1 Journeyman

Jurisdiction (* denotes special jurisdictional note) :

ASHTABULA, CUYAHOGA, GEAUGA, LAKE, LORAIN, PORTAGE*, SUMMIT*

Special Jurisdictional Note : Portage & Summit North of the East-West Turnpike.

Details :

Prevailing Wage Rate
Skilled Crafts

Name of Union: Painter Local 639

Change # : LCNO1-2015fbLoc639

Craft : Painter Effective Date : 06/10/2015 Last Posted : 06/10/2015

	BHR	Fringe Benefit Payments						Irrevocable Fund		Total PWR	Overtime Rate
		H&W	Pension	App Tr.	Vac.	Annuity	Other	LECET (*)	MISC (*)		
Classification											
Painter Metal Polisher											
Top Helper Class A	$19.09	$3.65	$0.00	$0.00	$0.66	$0.00	$0.00	$0.00	$0.00	$23.40	$32.94
Top Helper Class B	$19.09	$3.65	$0.65	$0.00	$1.03	$0.00	$0.37	$0.00	$0.00	$24.79	$34.33
Top Helper Class C	$19.09	$3.65	$1.00	$0.00	$1.76	$0.00	$0.37	$0.00	$0.00	$25.87	$35.41
Helper Class A	$14.69	$3.65	$0.00	$0.00	$0.51	$0.00	$0.00	$0.00	$0.00	$18.85	$26.19
Helper Class B	$14.69	$3.65	$0.65	$0.00	$0.79	$0.00	$0.28	$0.00	$0.00	$20.06	$27.40
Helper Class C	$14.69	$3.65	$1.00	$0.00	$1.64	$0.00	$0.28	$0.00	$0.00	$21.26	$28.60
New Hire 90 Days	$11.00	$3.65	$0.00	$0.00	$0.00	$0.00	$0.00	$0.00	$0.00	$14.65	$20.15

Special Calculation Note : Other is Sick and Personal Time

Ratio :

Jurisdiction (* denotes special jurisdictional note) :
ADAMS, ALLEN, ASHLAND, ASHTABULA, ATHENS, AUGLAIZE, BELMONT, BROWN, BUTLER, CARROLL, CHAMPAIGN, CLARK,

CLERMONT, CLINTON, COLUMBIANA, COSHOCTON, CRAWFORD, CUYAHOGA, DARKE, DEFIANCE, DELAWARE, ERIE, FAIRFIELD, FAYETTE, FRANKLIN, FULTON, GALLIA, GEAUGA, GREENE, GUERNSEY, HAMILTON, HANCOCK, HARDIN, HARRISON, HENRY, HIGHLAND, HOCKING, HOLMES, HURON, JACKSON, JEFFERSON, KNOX, LAKE, LAWRENCE, LICKING, LOGAN, LORAIN, LUCAS, MADISON, MAHONING, MARION, MEDINA, MEIGS, MERCER, MIAMI, MONROE, MONTGOMERY, MORGAN, MORROW, MUSKINGUM, NOBLE, OTTAWA, PAULDING, PERRY, PICKAWAY, PIKE, PORTAGE, PREBLE, PUTNAM, RICHLAND, ROSS, SANDUSKY, SCIOTO, SENECA, SHELBY, STARK, SUMMIT, TRUMBULL, TUSCARAWAS, UNION, VAN WERT, VINTON, WARREN, WASHINGTON, WAYNE, WILLIAMS, WOOD, WYANDOT

Special Jurisdictional Note :

Details :

Top Helper: Shall perform the responsibilities of a Helper and be responsible for the setup, break down, safety and quality of the company's product.
Helper : Shall be responsible for performing tasks in refinishing, compliance with safety procedures, setting up and breaking down job sites, scaffolding and swing stages and preparing surfaces for refinishing including but not limited to, masking and stripping and cleaning, oxidizing, polishing and scratch removal on various surfaces

Class A Workers: Less than 1 Year of Service.
Class B Workers: More than 1 and less than 8 Years of Service.
Class C Workers: More than 8 Years of Service.

Metal Polisher Scope of Work: Polishing, buffing, stripping, coloring, lacquering, spraying, cleaning and maintenance of ornamental and architectural metals, iron, bronze, nickel, aluminum and stainless steel and in mental specialty work, various stone finishes, stone specialty work and any other work pertaining to the finishing of metal, stones, woods, and any window washing/cleaning done in conjunction with this work, using chemicals, solvents, coatings and hand applied lacquer thinner, removing scratches from mirrow finished metals, burnishing of bronze, statuary finishes on exterior and interior surfaces and the use of all tools required to perform such work, including but not limited to polishes, spray equipment and scaffolding.

Swing State Rate: All work on scaffold 4 sections or higher, including any boom lifts and swing stage scaffolds including the rigging and derigging of hanging/suspended swing stage systems and rappelling/bolson chair work, ADD $1.50 per hour.

Prevailing Wage Rate
Skilled Crafts

Name of Union: Painter Local 639 (A) Sign

Change # : CN01-2009Loc639A

Craft : Painter Effective Date : 03/06/2009 Last Posted : 03/06/2009

	BHR		Fringe Benefit Payments						Irrevocable Fund		Total PWR	Overtime Rate
			H&W	Pension	App Tr.	Vac.	Annuity	Other	LECET (*)	MISC (*)		
Classification												
Painter Sign Erector	$19.98		$4.46	$1.00	$0.25	$1.68	$0.00	$0.00			$27.37	$37.36
Serviceman	$19.98		$4.46	$1.00	$0.25	$1.68	$0.00	$0.00			$27.37	$37.36
Metal Sign Fabricator	$19.98		$4.46	$1.00	$0.25	$1.68	$0.00	$0.00			$27.37	$37.36
Neon Bender Pattern Maker	$19.98		$4.46	$1.00	$0.25	$1.68	$0.00	$0.00			$27.37	$37.36
Computer Operator	$18.98		$4.46	$1.00	$0.25	$1.61	$0.00	$0.00			$26.30	$35.79
Router	$18.98		$4.46	$1.00	$0.25	$1.61	$0.00	$0.00			$26.30	$35.79
Plastic Wood Fabricator	$18.98		$4.46	$1.00	$0.25	$1.61	$0.00	$0.00			$26.30	$35.79
Vinyl Applicator	$18.98		$4.46	$1.00	$0.25	$1.61	$0.00	$0.00			$26.30	$35.79
Apprentice For Sign Service, Metal,Neon,Pattern	**Percent**											
1000 hrs	50.00	$9.99	$4.46	$1.00	$0.25	$1.03	$0.00	$0.00			$16.73	$21.73
2000 hrs	55.00	$10.99	$4.46	$1.00	$0.25	$0.37	$0.00	$0.00			$17.07	$22.56
3000 hrs	60.00	$11.99	$4.46	$1.00	$0.25	$0.37	$0.00	$0.00			$18.07	$24.06
4000 hrs	65.00	$12.99	$4.46	$1.00	$0.25	$0.37	$0.00	$0.00			$19.07	$25.56
5000 hrs	70.00	$13.99	$4.46	$1.00	$0.25	$0.37	$0.00	$0.00			$20.07	$27.06
6000 hrs	85.00	$16.98	$4.46	$1.00	$0.25	$0.37	$0.00	$0.00			$23.06	$31.55
7000 hrs	90.00	$17.98	$4.46	$1.00	$0.25	$0.37	$0.00	$0.00			$24.06	$33.05

Special Calculation Note : Apprentice Rates For: Computer Operator, Router, Plastic-Wood Fabricator Vinyl Application

1000 hrs 50% plus ($4.46 h&w)+($1.00 pension)+($.25 apprentice training) + vacation $0.99
2000 hrs 55% plus ($4.46 h&w)+($1.00 pension)+($.25 apprentice training) + vacation $0.37
3000 hrs 65% plus ($4.46 h&w)+($1.00 pension)+($.25 apprentice training) + vacation $0.37
4000 hrs 50% plus ($4.46 h&w)+($1.00 pension)+($.25 apprentice training) + vacation $0.37
5000 hrs 70% plus ($4.46 h&w)+($1.00 pension)+($.25 apprentice training) + vacation $0.37
6000 hrs 85% plus ($4.46 h&w)+($1.00 pension)+($.25 apprentice training) + vacation $0.37

7000 hrs 90% plus ($4.46 h&w)+($1.00 pension)+($.25 apprentice training) + vacation $0.37

Ratio :

Jurisdiction (* denotes special jurisdictional note) :
ASHLAND, ASHTABULA, CUYAHOGA, ERIE, GEAUGA, LAKE, LORAIN, MEDINA, PORTAGE, RICHLAND, STARK, SUMMIT

Special Jurisdictional Note :

Details :
Sign and display work shall include but not limited: to the making and installation of all signs and servicing of the same, lettering and pictorial work of any kind, including vinyl signs and vinyl substrates and the preparing for the finishing of same, be it by hand, brush, roller,spray, mechanical or computer aided and by any other method or process pertaining to same: they shall have control of all branches, methods and processes of screen process work: tube bending and display work such as creating, building and finishing of all display matter and its related operations used for advertising purposes, including all lettering whether it be done by hand, mechanical or computer aided or by any other method or process pertaining to same: the construction, erection and maintenance of all billboards and all communication advertising.

Prevailing Wage Rate
Skilled Crafts

Name of Union: Painter Local 639 (Cleveland Area) Sign

Change # : CN01-2006Loc639Cleve

Craft : Painter Effective Date : 01/03/2006 Last Posted : 01/03/2006

	BHR		Fringe Benefit Payments						Irrevocable Fund		Total PWR	Overtime Rate
			H&W	Pension	App Tr.	Vac.	Annuity	Other	LECET (*)	MISC (*)		
Classification												
Painter Sign	$20.20		$3.13	$3.25	$0.20	$1.96	$0.00	$0.00			$28.74	$38.84
Apprentice	Percent											
1000 hrs	40.00	$8.08	$3.13	$3.25	$0.20	$1.07	$0.00	$0.00			$15.73	$19.77
2000 hrs	50.00	$10.10	$3.13	$3.25	$0.20	$1.22	$0.00	$0.00			$17.90	$22.95
3000 hrs	60.00	$12.12	$3.13	$3.25	$0.20	$1.37	$0.00	$0.00			$20.07	$26.13
4000 hrs	70.00	$14.14	$3.13	$3.25	$0.20	$1.51	$0.00	$0.00			$22.23	$29.30
5000 hrs	75.00	$15.15	$3.13	$3.25	$0.20	$1.59	$0.00	$0.00			$23.32	$30.89
6000 hrs	80.00	$16.16	$3.13	$3.25	$0.20	$1.66	$0.00	$0.00			$24.40	$32.48
7000 hrs	85.00	$17.17	$3.13	$3.25	$0.20	$1.74	$0.00	$0.00			$25.49	$34.07
8000 hrs	90.00	$18.18	$3.13	$3.25	$0.20	$1.81	$0.00	$0.00			$26.57	$35.66

Special Calculation Note : No special calculations for this skilled craft wage rate are required at this time.

Ratio :

Jurisdiction (* denotes special jurisdictional note) :
ALLEN, ASHLAND, ASHTABULA, AUGLAIZE, BELMONT, CARROLL, CHAMPAIGN, COLUMBIANA, COSHOCTON, CRAWFORD, CUYAHOGA, DEFIANCE, ERIE, FULTON, GEAUGA, GUERNSEY, HANCOCK, HARDIN, HARRISON, HENRY, HOLMES, HURON, JEFFERSON, KNOX, LAKE, LOGAN, LORAIN, LUCAS, MAHONING, MARION, MEDINA,

MERCER, MONROE, MORROW, NOBLE, OTTAWA, PAULDING, PIKE, PORTAGE, PUTNAM, RICHLAND, SANDUSKY, SENECA, SHELBY, STARK, SUMMIT, TRUMBULL, TUSCARAWAS, VAN WERT, WASHINGTON, WAYNE, WILLIAMS, WOOD, WYANDOT

Special Jurisdictional Note :

Details :

Prevailing Wage Rate
Skilled Crafts

Name of Union: Painter Local 707

Change # : LCN01-2014fbLoc707

Craft : Painter Effective Date : 05/01/2014 Last Posted : 04/30/2014

	BHR		Fringe Benefit Payments						Irrevocable Fund		Total PWR	Overtime Rate
			H&W	Pension	App Tr.	Vac.	Annuity	Other	LECET (*)	MISC (*)		
Classification												
Painter Brush Roll	$27.57		$5.54	$4.05	$0.35	$0.00	$2.75	$0.00	$0.00	$0.00	$40.26	$54.05
Paperhanger	$27.57		$5.54	$4.05	$0.35	$0.00	$2.75	$0.00	$0.00	$0.00	$40.26	$54.05
Sandblasting & Buffing	$27.97		$5.54	$4.05	$0.35	$0.00	$2.75	$0.00	$0.00	$0.00	$40.66	$54.64
Spray Painting	$28.27		$5.54	$4.05	$0.35	$0.00	$2.75	$0.00	$0.00	$0.00	$40.96	$55.10
REPAINT Brush Roll & Paperhanger	$26.07		$5.54	$4.05	$0.35	$0.00	$2.75	$0.00	$0.00	$0.00	$38.76	$51.80
REPAINT Sandblasting & Buffing	$26.47		$5.54	$4.05	$0.35	$0.00	$2.75	$0.00	$0.00	$0.00	$39.16	$52.39
REPAINT Spray Painting	$26.77		$5.54	$4.05	$0.35	$0.00	$2.75	$0.00	$0.00	$0.00	$39.46	$52.85
Apprentice - Painter	**Percent**											
1st 6 months	45.00	$12.41	$5.54	$1.05	$0.30	$0.00	$0.00	$0.00	$0.00	$0.00	$19.30	$25.50
2nd 6 months	50.00	$13.79	$5.54	$1.05	$0.30	$0.00	$0.00	$0.00	$0.00	$0.00	$20.67	$27.57
3rd 6 months	55.00	$15.16	$5.54	$1.50	$0.30	$0.00	$1.51	$0.00	$0.00	$0.00	$24.01	$31.60
4th 6 months	60.00	$16.54	$5.54	$1.50	$0.30	$0.00	$1.65	$0.00	$0.00	$0.00	$25.53	$33.80
5th 6 months	65.00	$17.92	$5.54	$1.80	$0.30	$0.00	$1.79	$0.00	$0.00	$0.00	$27.35	$36.31
6th 6	70.00	$19.30	$5.54	$1.80	$0.30	$0.00	$1.93	$0.00	$0.00	$0.00	$28.87	$38.52

months												
7th 6 months	75.00	$20.68	$5.54	$2.50	$0.30	$0.00	$2.06	$0.00	$0.00	$0.00	$31.08	$41.42
8th 6 months	80.00	$22.06	$5.54	$2.50	$0.30	$0.00	$2.20	$0.00	$0.00	$0.00	$32.60	$43.62

Special Calculation Note : Apprentice pay based on percentage of above appropriate classification.

Ratio :

1 Apprentice to 1 Journeyman

Jurisdiction (* denotes special jurisdictional note) :

ASHTABULA, CUYAHOGA, GEAUGA, LAKE, LORAIN, PORTAGE*, SUMMIT*

Special Jurisdictional Note : Portage & Summit North of the East-West Turnpike.

Details :

Application of Catalytic materials under class 3 hazardous per MSDS - .65 per hour above the Job Classification basic hourly rate.
Application of Catalytic materials under class 4 hazardous per MSDS - 1.00 per hour above the Job Classification basic hourly rate.

Prevailing Wage Rate
Skilled Crafts

Name of Union: Painter Local 707 Industrial

Change # : LCN01-2014fbLoc707Ind

Craft : Painter Effective Date : 05/01/2014 Last Posted : 04/30/2014

	BHR	Fringe Benefit Payments						Irrevocable Fund		Total PWR	Overtime Rate
		H&W	Pension	App Tr.	Vac.	Annuity	Other	LECET (*)	MISC (*)		
Classification											
Painter Bridge Class 1	$28.27	$5.54	$4.05	$0.35	$0.00	$2.75	$0.00	$0.00	$0.00	$40.96	$55.10
Bridge Blaster	$29.27	$5.54	$4.05	$0.35	$0.00	$2.75	$0.00	$0.00	$0.00	$41.96	$56.60
Bridge Quality Control & Assurance, Flag Person, Equipment Operator, Boat Person, Driver Vacuum (Grit Reclamation Operator)	$23.98	$5.54	$4.05	$0.35	$0.00	$2.75	$0.00	$0.00	$0.00	$36.67	$48.66
Closed Steel Above 55 ft., Open Structural Tanks - Water Towers	$28.27	$5.54	$4.05	$0.35	$0.00	$2.75	$0.00	$0.00	$0.00	$40.96	$55.10
Fiberglass & Insulator Material	$28.27	$5.54	$4.05	$0.35	$0.00	$2.75	$0.00	$0.00	$0.00	$40.96	$55.10
Concrete Sealing	$22.52	$5.54	$4.05	$0.35	$0.00	$2.75	$0.00	$0.00	$0.00	$35.21	$46.47

Apprentice - Painter	Percent											
1st 6 months	45.00	$12.72	$5.54	$1.05	$0.35	$0.00	$0.00	$0.00	$0.00	$0.00	$19.66	$26.02
2nd 6 months	50.00	$14.14	$5.54	$1.05	$0.35	$0.00	$0.00	$0.00	$0.00	$0.00	$21.08	$28.14
3rd 6 months	55.00	$15.55	$5.54	$1.50	$0.35	$0.00	$1.51	$0.00	$0.00	$0.00	$24.45	$32.22
4th 6 months	60.00	$16.96	$5.54	$1.50	$0.35	$0.00	$1.65	$0.00	$0.00	$0.00	$26.00	$34.48
5th 6 months	65.00	$18.38	$5.54	$1.80	$0.35	$0.00	$1.79	$0.00	$0.00	$0.00	$27.86	$37.04
6th 6 months	70.00	$19.79	$5.54	$1.80	$0.35	$0.00	$1.93	$0.00	$0.00	$0.00	$29.41	$39.30
7th 6 months	75.00	$21.20	$5.54	$2.50	$0.35	$0.00	$2.06	$0.00	$0.00	$0.00	$31.65	$42.25
8th 6 months	80.00	$22.62	$5.54	$2.50	$0.35	$0.00	$2.20	$0.00	$0.00	$0.00	$33.21	$44.51

Special Calculation Note : Apprentice pay based on percentage of above appropriate classification.

Ratio :

1 Apprentice to 1 Journeyman

Jurisdiction (* denotes special jurisdictional note) :

ASHTABULA, CUYAHOGA, GEAUGA, LAKE, LORAIN, PORTAGE*, SUMMIT*

Special Jurisdictional Note : Portage & Summit North of the East-West Turnpike.

Details :

Painter Bridge Class 1 is Defined as; Bridge Painter, Rigger, Containment Builder
Application of Catalytic materials under class 3 hazardous per MSDS - .65 per hour above the Job Classification basic hourly rate.
Application of Catalytic materials under class 4 hazardous per MSDS - 1.00 per hour above the Job Classification basic hourly rate.
* Concrete Sealing: on highway work, scaling of concrete surfaces, the treating and sealing of bridge decks, the painting and staining of concrete, including the abutments, barricades, noise barriers, lane dividers, etc.

Prevailing Wage Rate
Skilled Crafts

Name of Union: Pipefitter Local 120

Change # : LCNO1-2015fbLoc120

Craft : Sprinkler Fitter Effective Date : 11/04/2015 Last Posted : 11/04/2015

	BHR		Fringe Benefit Payments						Irrevocable Fund		Total PWR	Overtime Rate
			H&W	Pension	App Tr.	Vac.	Annuity	Other	LECET (*)	MISC (*)		
Classification												
Sprinkler Fitter	$36.19		$10.70	$8.93	$0.71	$0.00	$2.15	$0.40	$0.00	$0.00	$59.08	$77.17
Apprentice	Percent											
1st year	42.50	$15.38	$5.05	$0.00	$0.71	$0.00	$0.00	$0.00	$0.00	$0.00	$21.14	$28.83
2nd year	44.71	$16.18	$10.40	$5.12	$0.71	$0.00	$0.00	$0.40	$0.00	$0.00	$32.81	$40.90
3rd year	52.78	$19.10	$10.40	$5.12	$0.71	$0.00	$0.00	$0.40	$0.00	$0.00	$35.73	$45.28
4th year	68.91	$24.94	$10.40	$5.12	$0.71	$0.00	$0.00	$0.40	$0.00	$0.00	$41.57	$54.04
5th year	76.98	$27.86	$10.40	$5.12	$0.71	$0.00	$0.00	$0.40	$0.00	$0.00	$44.49	$58.42

Special Calculation Note : OTHER IS :SUPPLEMENTAL UNEMPLOYMENT BENEFITS

Ratio :

1 Journeymen to 1 Apprentice per project
2 - 4 Journeymen to 2 Apprentices
5 - 7 Journeymen to 3 Apprentices

3 Journeymen to 1 Apprentice on jobs with 9 or more journeymen

Jurisdiction (* denotes special jurisdictional note) :
CUYAHOGA, GEAUGA, LAKE, LORAIN

Special Jurisdictional Note :

Details :
Sprinklerfitter duties shall include: installation, dismantling, maintenance, repairs, adjustments and corrections of all fire protection and extinguishing systems; consist of handling and installing of all piping and appurtenances pertaining to sprinkler equipment including both overhead and underground

water mains, fire hydrants and hydrants mains, stand pipes, hose connections, tank heaters, air lines, thermal systems and their connections; all operating and actuating lines and devices and their protective covering; all fire stopping of sprinkler piping systems; all tanks, pumps and city connections; fire protection systems using emulsify, spray, water fog, CO2 gas, foam and other fire control agents, settling of all fire pumps and tank filling pumps, air compressors and their connections; all work related to sprinkler inspections (included but not limited to: adjustments, maintenance, repair, testing, etc.)

Prevailing Wage Rate
Skilled Crafts

Name of Union: Pipefitter Local 120

Change # : LCN01-2015fbLoc120

Craft : Pipefitter Effective Date : 11/04/2015 Last Posted : 11/04/2015

	BHR		Fringe Benefit Payments						Irrevocable Fund		Total PWR	Overtime Rate
			H&W	Pension	App Tr.	Vac.	Annuity	Other	LECET (*)	MISC (*)		
Classification												
Pipefitter	$36.19		$10.70	$8.93	$0.71	$0.00	$2.15	$0.40	$0.00	$0.00	$59.08	$77.17
Apprentice	Percent											
1st year	42.50	$15.38	$5.05	$0.00	$0.71	$0.00	$0.00	$0.00	$0.00	$0.00	$21.14	$28.83
2nd year	44.71	$16.18	$10.40	$5.12	$0.71	$0.00	$0.00	$0.40	$0.00	$0.00	$32.81	$40.90
3rd year	52.78	$19.10	$10.40	$5.12	$0.71	$0.00	$0.00	$0.40	$0.00	$0.00	$35.73	$45.28
4th year	68.91	$24.94	$10.40	$5.12	$0.71	$0.00	$0.00	$0.40	$0.00	$0.00	$41.57	$54.04
5th year	76.98	$27.86	$10.40	$5.12	$0.71	$0.00	$0.00	$0.40	$0.00	$0.00	$44.49	$58.42

Special Calculation Note : OTHER IS :SUPPLEMENTAL UNEMPLOYMENT BENEFITS

Ratio :

1 Journeymen to 1 Apprentice per project
2-4 Journeymen to 2 Apprentices per project
5-7 Journeymen to 3 Apprentices per project

3 to 1 on jobs with 9 or more journeymen

Jurisdiction (* denotes special jurisdictional note) :
ASHTABULA, CUYAHOGA, GEAUGA, LAKE, MEDINA*, SUMMIT*

Special Jurisdictional Note : Summit County - North of State Route 303 including work within the corporate limits of the City of Hudson, that portion of Medina County North of State Route 18 and Smith Road and including work within the corporate limits of the City of Medina.

Details :
Under pipefittter duties shall include - steam and hot water heating boilers and related controls such as automatic feedwater and low water cut-offs, safety relief valves and gas trains; steam regulators,

traps, steam valves, steam heaters, steam and hot water heating coils; feedwater lines to boilers, condensate pumps, condensate tanks and related piping to boilers, expansion tanks and controls on hot water heating systems; refrigeration and air conditioning systems that are separate from one another and are connected through piping; install, calibrate and maintain pneumatic temperture controls and piping for heating and cooling devices; piping, pumps and controls on the fluent water system in water treatment plants; hose cabinets and automatic fire sprinkler systems; underground water supply piping and devices; all fire stopping of piping systems; to operate a pipe cutting machine, to thread pipe by machine or hand dies; to do oxyacetylene and electric welding on iron and steel pipes when required; to perform other tasks when assigned.

Prevailing Wage Rate
Skilled Crafts

Name of Union: Pipefitter Local 120 Mechanical Equipment

Change # : LCN01-2015fbLoc120

Craft : Pipefitter Effective Date : 11/04/2015 Last Posted : 11/04/2015

	BHR		Fringe Benefit Payments						Irrevocable Fund		Total PWR	Overtime Rate
			H&W	Pension	App Tr.	Vac.	Annuity	Other	LECET (*)	MISC (*)		
Classification												
Pipefitter Mechanical Equipment Service	$28.78		$10.70	$8.93	$0.71	$0.00	$2.15	$0.40	$0.00	$0.00	$51.67	$66.06
Intermediate Journeymen												
Serviceman 1	$19.64		$10.40	$3.21	$0.71	$0.00	$1.20	$0.40	$0.00	$0.00	$35.56	$45.38
Serviceman 2	$22.03		$10.40	$3.21	$0.71	$0.00	$1.20	$0.40	$0.00	$0.00	$37.95	$48.97
Serviceman 3	$24.72		$10.40	$3.21	$0.71	$0.00	$1.20	$0.40	$0.00	$0.00	$40.64	$53.00
Serviceman 4	$27.63		$10.40	$3.21	$0.71	$0.00	$1.20	$0.40	$0.00	$0.00	$43.55	$57.37
MES Trainees	**Percent**											
1st year	49.38	$14.21	$5.05	$0.00	$0.71	$0.00	$0.00	$0.00	$0.00	$0.00	$19.97	$27.08
2nd year	48.95	$14.09	$5.05	$3.21	$0.71	$0.00	$1.00	$0.00	$0.00	$0.00	$24.06	$31.10
3rd year	55.03	$15.84	$5.05	$3.21	$0.71	$0.00	$1.00	$0.00	$0.00	$0.00	$25.81	$33.73
4th year	59.10	$17.01	$5.05	$3.21	$0.71	$0.00	$1.00	$0.00	$0.00	$0.00	$26.98	$35.48
5th year	63.15	$18.17	$5.05	$3.21	$0.71	$0.00	$1.00	$0.00	$0.00	$0.00	$28.14	$37.23

Special Calculation Note : OTHER IS :SUPPLEMENTAL UNEMPLOYMENT BENEFITS

Ratio :

3 Intermediate Servicemen to 1 Serviceman
Trainee Per Shop

Jurisdiction (* denotes special jurisdictional note) :
ASHTABULA, CUYAHOGA, GEAUGA, LAKE, MEDINA*, SUMMIT*

Special Jurisdictional Note : Summit County - North of State Route 303 including work within the corporate limits of the City of Hudson, that portion of Medina County North of Route 18 and Smith Road and including work within the corporate limits of the City of Medina.

Details :

Work scope but not limited to:Mechanical Service and Maintenance work normally performed by contractors, either by contracts or emergency call basis, who are equipped to handle all work relating to evacuation, charging, start-up, inspection, operating, maintenance and service call necessary to keep mechanical system and controls of a refrigeration , air conditioning, heating and/or ventilation or any other newly installed, remodeled, revamped or redesigned mechanical system in operational order; all fire stopping and piping systems. Shall include but not limited to all maintaining, cleaning, adjusting, repairing, overhauling, starting and balancing of any system or component part thereof, regardless of size or location, including all other service and maintenance work assigned to the employer by the customer. Shall also be allowed to do the following installation work: All residential humidifiers and dehumidifiers, all window type units, all residential heating and cooling systems, excluding steam and hot water, and when a building is not new construction, all refrigeration systems up to 20 tons, split air conditioning systems up to 50 tons, and package or self-contained air conditioning units up to 50 tons.

Prevailing Wage Rate
Skilled Crafts

Name of Union: Plasterer Local 31

Change # : LCN02-2015fbLoc80

Craft : Plaster Effective Date : 07/29/2015 Last Posted : 07/29/2015

	BHR		Fringe Benefit Payments						Irrevocable Fund		Total PWR	Overtime Rate
			H&W	Pension	App Tr.	Vac.	Annuity	Other	LECET (*)	MISC (*)		
Classification												
Plasterer	$29.51		$6.80	$4.70	$0.10	$0.00	$4.82	$0.10	$0.00	$0.00	$46.03	$60.79
Apprentice	Percent											
0-1000 hrs	40.00	$11.80	$0.00	$0.00	$0.00	$0.00	$0.00	$0.00	$0.00	$0.00	$11.80	$17.71
1000-2000 hrs	45.00	$13.28	$6.80	$4.70	$0.10	$0.00	$4.82	$0.10	$0.00	$0.00	$29.80	$36.44
2000-3000 hrs	50.00	$14.76	$6.80	$4.70	$0.10	$0.00	$4.82	$0.10	$0.00	$0.00	$31.28	$38.65
3000-4000 hrs	55.00	$16.23	$6.80	$4.70	$0.10	$0.00	$4.82	$0.10	$0.00	$0.00	$32.75	$40.87
4000-5000 hrs	60.00	$17.71	$6.80	$4.70	$0.10	$0.00	$4.82	$0.10	$0.00	$0.00	$34.23	$43.08
5000-6000 hrs	65.00	$19.18	$6.80	$4.70	$0.10	$0.00	$4.82	$0.10	$0.00	$0.00	$35.70	$45.29
6000-7000 hrs	70.00	$20.66	$6.80	$4.70	$0.10	$0.00	$4.82	$0.10	$0.00	$0.00	$37.18	$47.51
7000-8000 hrs	75.00	$22.13	$6.80	$4.70	$0.10	$0.00	$4.82	$0.10	$0.00	$0.00	$38.65	$49.72

Special Calculation Note : Other is $.10 for Substance abuse and training.

Ratio :

3 Journeymen to 1 Apprentice thereafter

Each employer shall use their best efforts to employ at least 1 certified apprentice in every shop after his first Journeyman.

Jurisdiction (* denotes special jurisdictional note) :
ASHTABULA, CUYAHOGA, GEAUGA, LAKE, LORAIN

Special Jurisdictional Note :

Details :

Prevailing Wage Rate
Skilled Crafts

Name of Union: Plumber Local 55

Change # : LCN0-2015fbLoc55Plum

Craft : Plumber Effective Date : 06/03/2015 Last Posted : 06/03/2015

	BHR		Fringe Benefit Payments						Irrevocable Fund		Total PWR	Overtime Rate
			H&W	Pension	App Tr.	Vac.	Annuity	Other	LECET (*)	MISC (*)		
Classification												
Plumber	$34.90		$9.50	$10.05	$1.18	$0.00	$0.50	$0.55	$0.00	$0.00	$56.68	$74.13
Yard Piping	$23.41		$6.88	$1.95	$0.64	$0.00	$0.50	$0.55	$0.00	$0.00	$33.93	$45.64
Shopman	$19.24		$7.30	$5.63	$0.10	$0.00	$0.50	$0.00	$0.00	$0.00	$32.77	$42.39
Apprentice Initiated BEFORE 5/1/10												
4th year	$25.18		$6.50	$2.86	$1.05	$0.00	$0.50	$0.55	$0.00	$0.00	$36.64	$49.23
5th year	$27.67		$6.83	$2.86	$1.10	$0.00	$0.50	$0.55	$0.00	$0.00	$39.51	$53.35
Apprentice Initiated AFTER 5/1/10	**Percent**											
1-6 Months	37.05	$12.93	$5.71	$0.00	$0.90	$0.00	$0.00	$0.00	$0.00	$0.00	$19.54	$26.01
7-12 Months	42.98	$15.00	$5.76	$0.16	$0.95	$0.00	$0.00	$0.55	$0.00	$0.00	$22.42	$29.92
2nd year	44.33	$15.47	$6.36	$1.91	$1.00	$0.00	$0.00	$0.55	$0.00	$0.00	$25.29	$33.03
3rd year	49.75	$17.36	$6.36	$2.76	$1.00	$0.00	$0.00	$0.55	$0.00	$0.00	$28.03	$36.71
4th year	56.36	$19.67	$6.41	$2.76	$1.00	$0.00	$0.50	$0.55	$0.00	$0.00	$30.89	$40.72
5th year	63.46	$22.15	$6.78	$2.76	$1.00	$0.00	$0.50	$0.55	$0.00	$0.00	$33.74	$44.81
Shopman After 5/1/10	34.75	$12.13	$6.17	$1.80	$0.10	$0.00	$0.50	$0.00	$0.00	$0.00	$20.70	$26.76

Special Calculation Note : OTHER IS: SUPPLEMENTAL UNEMPLOYMENT

Ratio :

Jurisdiction (* denotes special jurisdictional note) :

1 Apprentice for the first steadily employed journeyman, and thereafter 1 Apprentice for every 2 steadily employed journeymen	ASHTABULA, CUYAHOGA, GEAUGA, LAKE, MEDINA*, SUMMIT*

Special Jurisdictional Note : Summit County - North of State Route 303 including work within the corporate limits of the City of Hudson, that portion of Medina County North of Route 18 and Smith Road and the corporate limits of the City of Medina.

Details :
The Plumber Shopman will have charge of the Employer's shop and warehouse containing plumbing and heating supplies and equipment, and perform such duties as are customarily required by a Plumber or a Plumber's Shopman, including casual delivery of tools and equipment necessary for installation of Plumbing and Heating facilities.

Prevailing Wage Rate
Skilled Crafts

Name of Union: Roofer Local 44

Change # : LCN01-2015fbLoc44

Craft : Roofer Effective Date : 04/26/2015 Last Posted : 04/22/2015

	BHR		Fringe Benefit Payments						Irrevocable Fund		Total PWR	Overtime Rate
			H&W	Pension	App Tr.	Vac.	Annuity	Other	LECET (*)	MISC (*)		
Classification												
Roofer	$30.45		$8.80	$8.35	$0.28	$0.00	$0.00	$0.04	$0.00	$0.00	$47.92	$63.14
Waterproofer	$30.45		$8.60	$8.35	$0.28	$0.00	$0.00	$0.04	$0.00	$0.00	$47.72	$62.95
Applicant & Helper Trainees												
0 to 1851 hrs	$13.50		$0.25	$0.25	$0.28	$0.00	$0.00	$0.04	$0.00	$0.00	$14.32	$21.07
1852 to 3350 hrs	$16.74		$8.80	$8.35	$0.28	$0.00	$0.00	$0.04	$0.00	$0.00	$34.21	$42.58
3351 to 4850 hrs	$21.31		$8.80	$8.35	$0.28	$0.00	$0.00	$0.04	$0.00	$0.00	$38.78	$49.44
4851 to 6350 hrs	$24.36		$8.80	$8.35	$0.28	$0.00	$0.00	$0.04	$0.00	$0.00	$41.83	$54.01
6351 to 7550 hrs	$27.40		$8.80	$8.35	$0.28	$0.00	$0.00	$0.04	$0.00	$0.00	$44.87	$58.57
Apprentice	**Percent**											
Start of school	44.33	$13.50	$0.25	$0.25	$0.28	$0.00	$0.00	$0.04	$0.00	$0.00	$14.32	$21.07
600 hrs worked/72 school hrs	45.01	$13.71	$0.25	$0.25	$0.28	$0.00	$0.00	$0.04	$0.00	$0.00	$14.53	$21.38
1200 hrs worked/144 school hrs	50.00	$15.23	$0.25	$0.25	$0.28	$0.00	$0.00	$0.04	$0.00	$0.00	$16.04	$23.66
1800 hrs worked/216 school hrs	55.00	$16.75	$8.80	$8.35	$0.28	$0.00	$0.00	$0.04	$0.00	$0.00	$34.22	$42.59
2400 hrs worked/ 288 school hrs	60.00	$18.27	$8.80	$8.35	$0.28	$0.00	$0.00	$0.04	$0.00	$0.00	$35.74	$44.88
3000 hrs worked/360 school hrs	70.00	$21.31	$8.80	$8.35	$0.28	$0.00	$0.00	$0.04	$0.00	$0.00	$38.78	$49.44

3600 hrs worked/432 school hrs	80.00	$24.36	$8.80	$8.35	$0.28	$0.00	$0.00	$0.04	$0.00	$0.00	$41.83	$54.01
4200 hrs worked/504 school hrs	90.00	$27.41	$8.80	$8.35	$0.28	$0.00	$0.00	$0.04	$0.00	$0.00	$44.88	$58.58
4800 hrs/576 school hrs	100.00	$30.45	$8.80	$8.35	$0.28	$0.00	$0.00	$0.04	$0.00	$0.00	$47.92	$63.14

Special Calculation Note : There are no special calculations for this skilled craft wage rate are required at this time.

Ratio :

2 Journeymen to 1 Apprentice
1 Applicant/Helper Trainee

Jurisdiction (* denotes special jurisdictional note) :
ASHTABULA, CUYAHOGA, ERIE, GEAUGA, LAKE, LORAIN*, SANDUSKY

Special Jurisdictional Note : Lorain (The Ohio Turnpike North)

Details :
$0.04 for "Other" is for Drug Testing

Prevailing Wage Rate
Skilled Crafts

Name of Union: Sheet Metal Local 33 (Cleveland)

Change # : LCN01-2015fbLoc33Clev

Craft : Sheet Metal Worker Effective Date : 05/01/2015 Last Posted : 04/29/2015

	BHR		Fringe Benefit Payments						Irrevocable Fund		Total PWR	Overtime Rate
			H&W	Pension	App Tr.	Vac.	Annuity	Other	LECET (*)	MISC (*)		
Classification												
Sheet Metal Worker	$35.96		$7.14	$13.14	$1.09	$0.00	$1.55	$0.00	$0.00	$0.00	$58.88	$76.86
Apprentice	Percent											
1st year	40.00	$14.38	$7.34	$2.08	$0.00	$0.00	$0.00	$0.00	$0.00	$0.00	$23.80	$31.00
2nd year	44.93	$16.16	$7.34	$2.34	$1.09	$0.00	$1.55	$0.00	$0.00	$0.00	$28.48	$36.56
3rd year	49.95	$17.96	$7.34	$2.60	$1.09	$0.00	$1.55	$0.00	$0.00	$0.00	$30.54	$39.52
4th year	59.95	$21.56	$7.34	$3.11	$1.09	$0.00	$1.55	$0.00	$0.00	$0.00	$34.65	$45.43
5th year	74.95	$26.95	$7.34	$3.89	$1.09	$0.00	$1.55	$0.00	$0.00	$0.00	$40.82	$54.30

Special Calculation Note : No special calculations for this skilled craft wage rate are required at this time.

Ratio :

1 Journeyman to 1 Apprentice
2 Journeymen to 1 Apprentice
3 Journeymen to 2 Apprentices
4 Journeymen to 2 Apprentices
5 Journeymen to 3 Apprentices
6 Journeymen to 3 Apprentices

Jurisdiction (* denotes special jurisdictional note) :
ASHTABULA, CUYAHOGA, GEAUGA, LAKE

Special Jurisdictional Note :

Details :

Prevailing Wage Rate
Skilled Crafts

Name of Union: Sheet Metal Local 33 (Cleveland) Decking

Change # : CN01-2008Loc33(Clev)Deck

Craft : Sheet Metal Worker Effective Date : 09/24/2009 Last Posted : 09/24/2009

	BHR		Fringe Benefit Payments						Irrevocable Fund		Total PWR	Overtime Rate
			H&W	Pension	App Tr.	Vac.	Annuity	Other	LECET (*)	MISC (*)		
Classification												
Sheet Metal Worker Decking & Siding	$20.06		$5.45	$6.35	$0.38	$0.00	$0.00	$0.96			$33.20	$43.23
Decking & Siding Specialty Trainees	Percent											
First 30 days	64.28	$12.89	$0.00	$0.00	$0.00	$0.00	$0.00	$0.00			$12.89	$19.34
2nd thru 6th month	64.28	$12.89	$5.45	$6.35	$0.00	$0.00	$0.00	$0.00			$24.69	$31.14
7th thru 12th months	64.28	$12.89	$5.45	$6.35	$0.38	$0.00	$0.00	$0.96			$26.03	$32.48
2nd year	78.55	$15.76	$5.45	$6.35	$0.38	$0.00	$0.00	$0.96			$28.90	$36.78

Special Calculation Note : No special calculations for this skilled craft wage rate are required at this time.

Ratio :

3 Journeymen To 1 Apprentice

Jurisdiction (* denotes special jurisdictional note) :
ASHTABULA, CUYAHOGA, GEAUGA, LAKE

Special Jurisdictional Note :

Details :
Work but not limited to:Exterior application of manufactured and/or job site fabricated metal decking, siding and exterior appurtenances thereto. The erection of pre-engineered metal buildings, pre-manufactured gas stations and appurtenances thereto. The installation of metal roofs and appurtenances. The erection and/or job site fabrication of draft or fire curtains and appurtenances thereto.

Prevailing Wage Rate
Skilled Crafts

Name of Union: Truck Driver HevHwy 436

Change # : LCN01-2015fbLoc436

Craft : Truck Driver Effective Date : 08/12/2015 Last Posted : 08/12/2015

	BHR	Fringe Benefit Payments						Irrevocable Fund		Total PWR	Overtime Rate
		H&W	Pension	App Tr.	Vac.	Annuity	Other	LECET (*)	MISC (*)		
Classification											
Truck Driver - Straight and Dump Trucks including Asphalt-Straight Fuel -Warehousemen-Straight Fuel	$26.90	$4.80	$10.05	$0.00	$0.00	$0.00	$0.00	$0.00	$0.00	$41.75	$55.20
Semi Fuel-Semi Tractor Drivers-Darts-Tank Asphalt Spreaders-Low Boys. Carryall Drivers-Rockers- Hilifts-Forklifts-Xtra long Trailers etc.	$27.40	$4.80	$10.05	$0.00	$0.00	$0.00	$0.00	$0.00	$0.00	$42.25	$55.95

Special Calculation Note : No special calculations for this skilled craft wage rate are required at this time.

Ratio :

Jurisdiction (* denotes special jurisdictional note) :
CUYAHOGA, LAKE, GEAUGA

Special Jurisdictional Note :

Details :

Eculids include: Darts, Tank, Asphalt Spreaders, Low Boys, Carry-All Drivers, Tourna-Rockers, High-Lifts, Fork-Lifts, Extra Long Trailers and Semi-Tractor and Tri-Axle Trailer, Tandem Tractor and Tandem Trailer, Tandem Trailer and Tri-Axle Trailer, Tag Along Trailer, Expandable Trailers or towing requiring road permits. Ready-Mix (Agitator or non-agitator) Bulk Concrete Drivers, dry Batch Trucks, Articulated End Dump, Bus Drivers.

Holiday Pay = 7 holidays X (8 hours X BHR)/2080 hours per year.
This pay is only for those employee's who started driving before 1976.
To be eligible to receive holiday pay an employee must have worked at least one (1) day in the period fourteen (14) calendar days prior to the holiday and/or in the fourteen (14) day calendar period after the holiday.

SECTION 9
DETAILED DRAWINGS

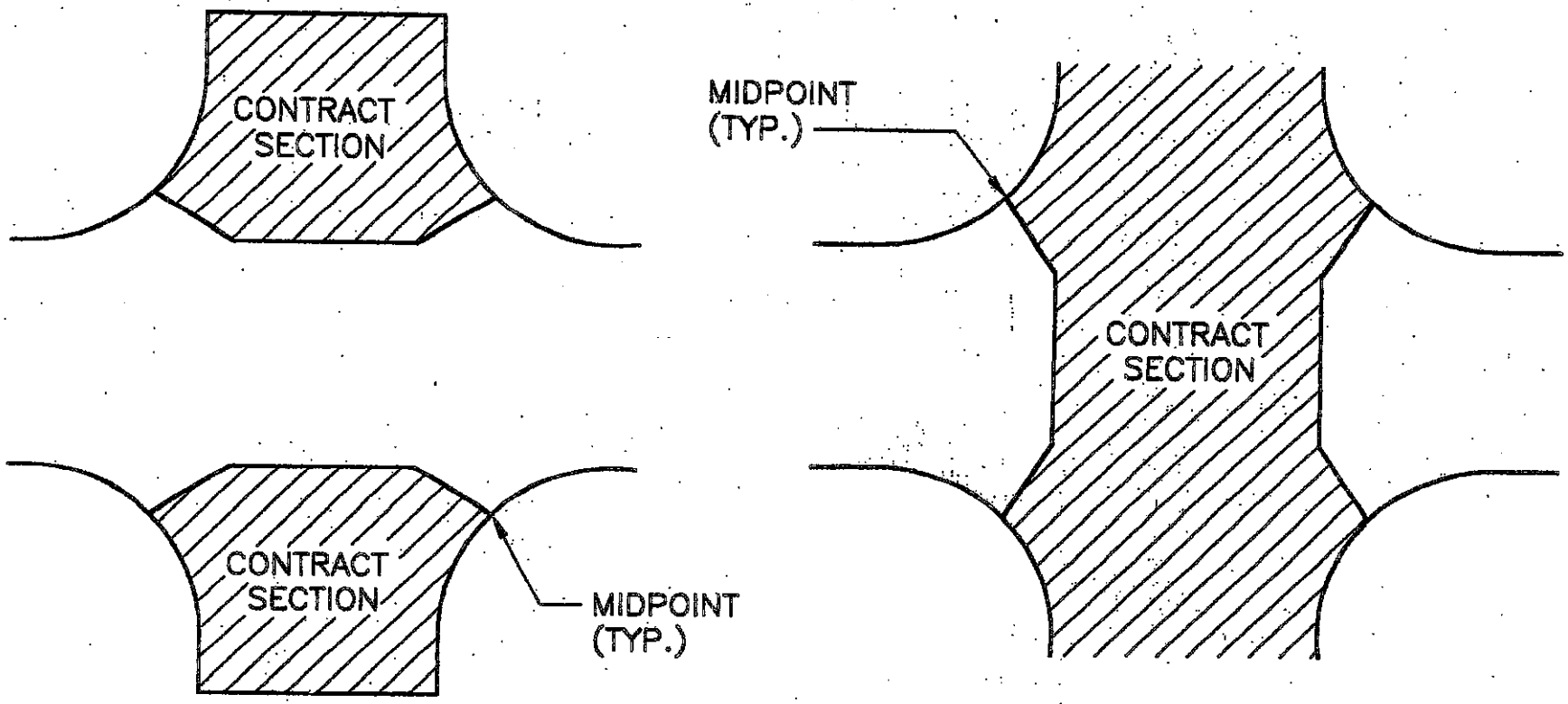

TYPICAL GRINDING AT INTERSECTIONS

N.T.S.

NOTE: ACTUAL GRINDING LIMITS WILL BE MARKED IN THE FIELD BY THE ENGINEER.

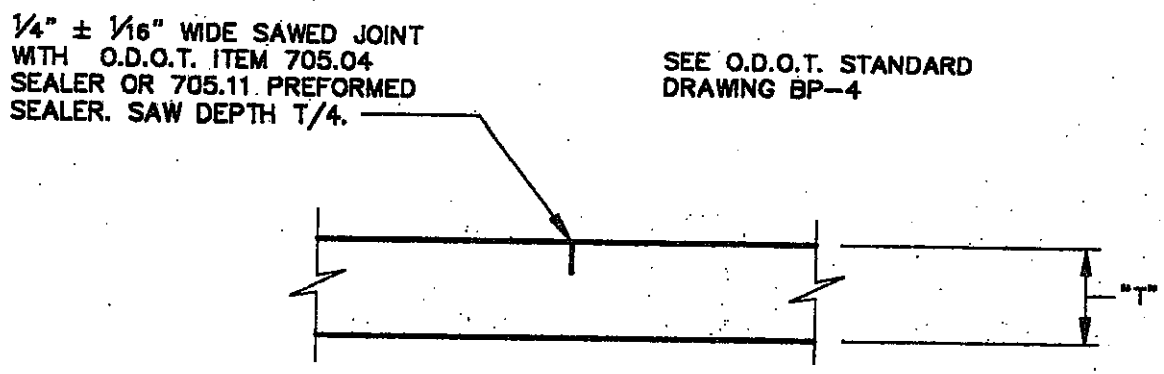

CONTRACTION JOINT

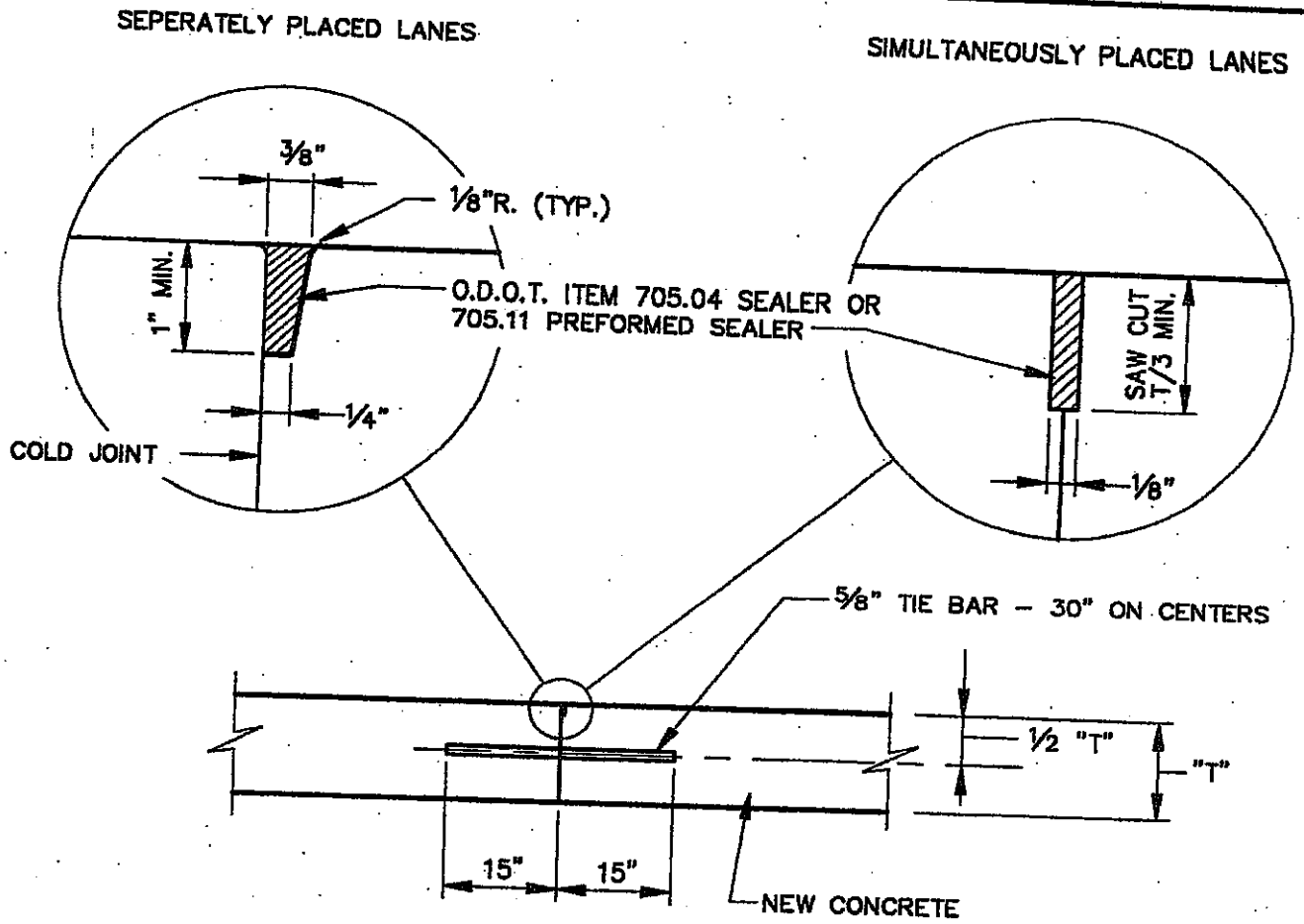

NOTE:
SEE O.D.O.T. STANDARD DRAWING BP-3
FOR ALTERNATE BUTT JOINT DETAILS.

(TOTALLY NEW CONSTRUCTION)

LONGITUDINAL BUTT JOINT

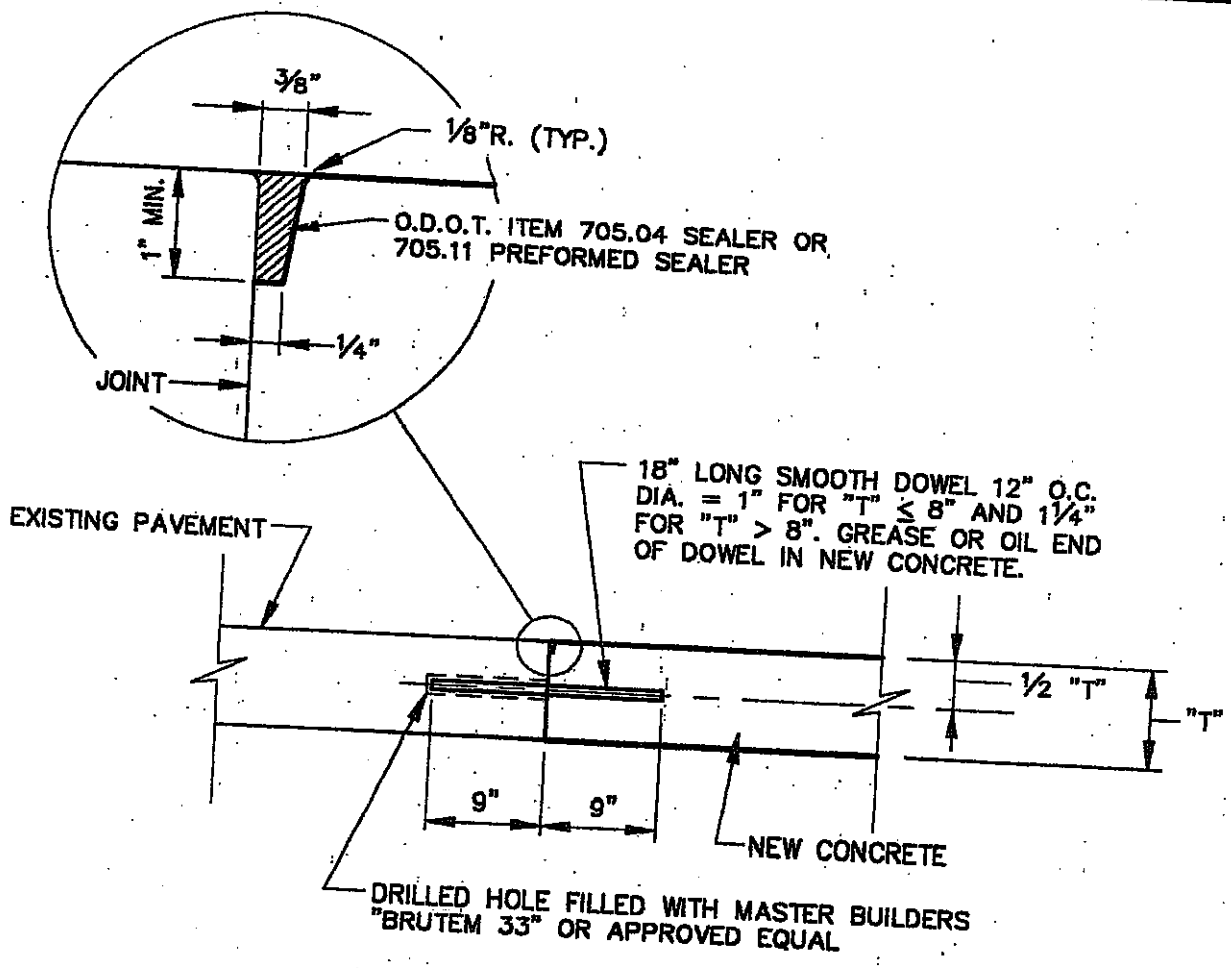

TRANSVERSE BUTT JOINT

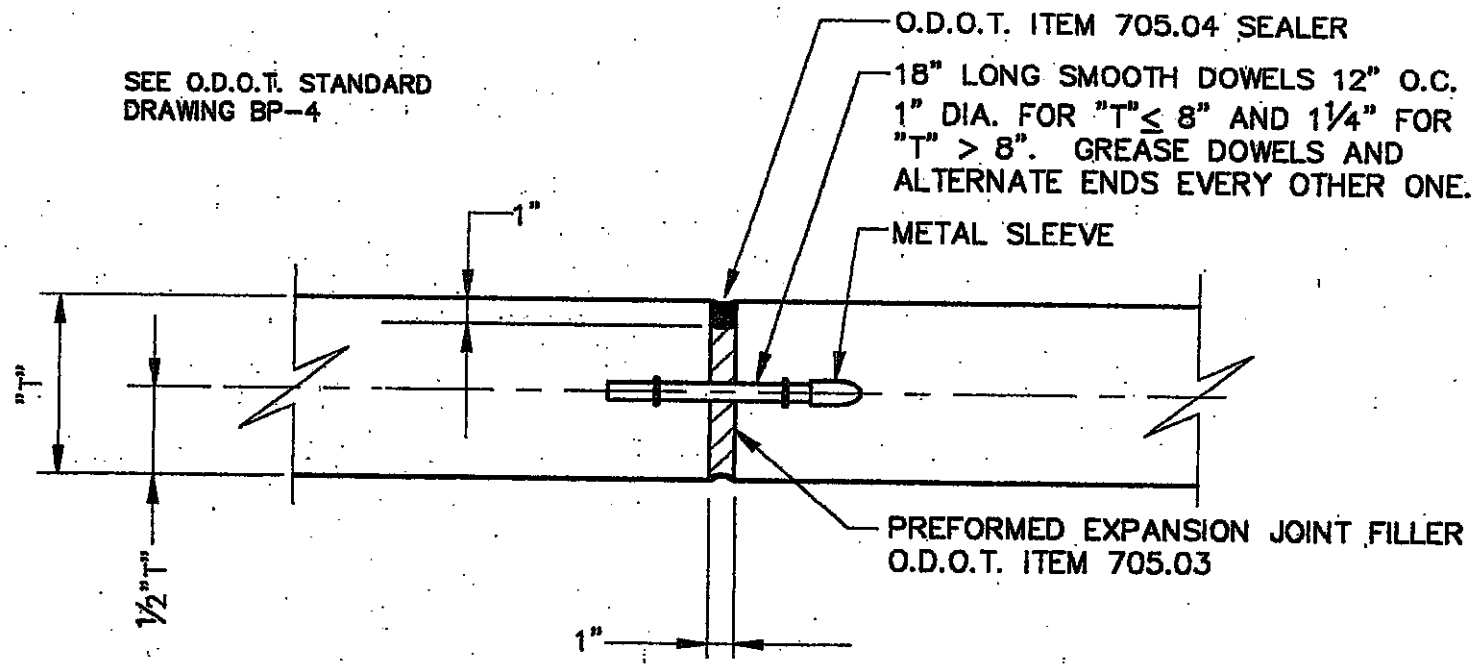

NOTE: EXPANSION JOINTS SHALL BE USED AT ALL INTERSECTIONS AND WHERE DESIGNATED ON THE PLANS OR BY THE ENGINEER.

EXPANSION JOINT

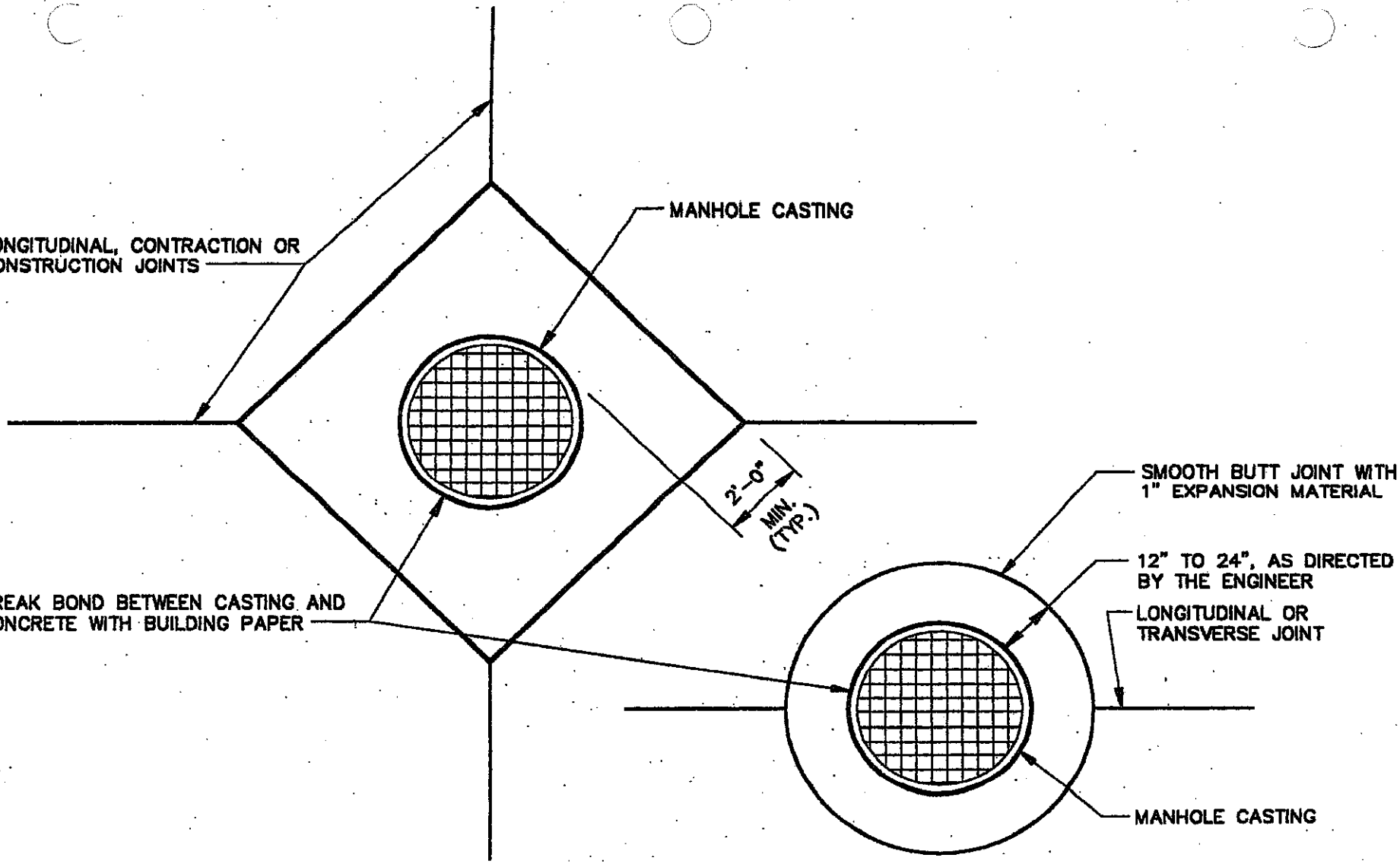

MANHOLE BOX-OUT DETAIL

(N.T.S.)

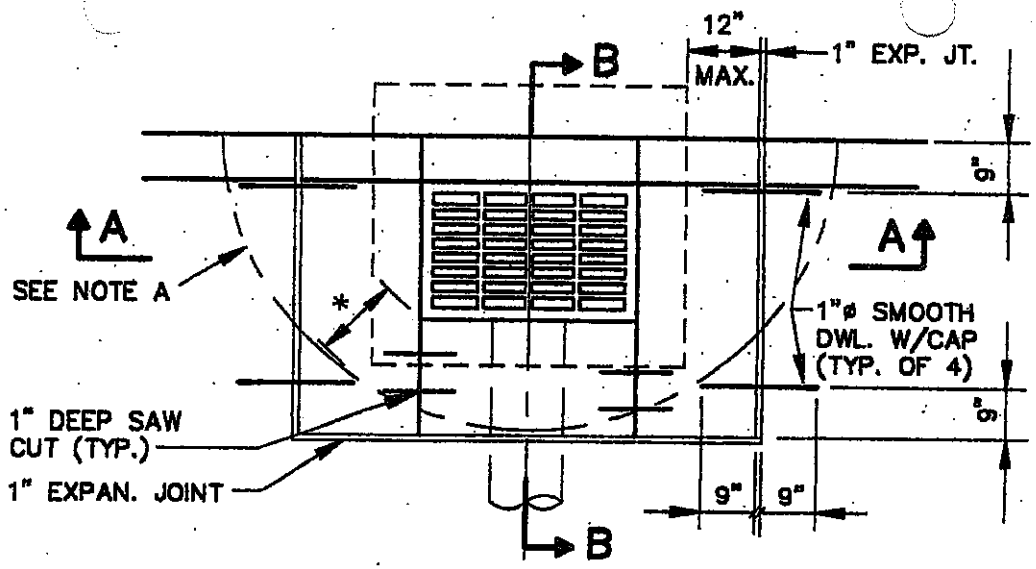

PLAN

NOTE A:
ALTERNATE INLET BOX-OUT TO BE USED WHERE RECTANGULAR BOX-OUT DOES NOT FIT PAVEMENT JOINT PATTERN OR WHERE DIRECTED BY ENGINEER. JOINT TO BE A SMOOTH BUTT JOINT WITH 1" EXPANSION MATERIAL. DELETE SMOOTH DOWEL BARS AND CAPS. * = 12" TO 24", AS DIRECTED BY ENGINEER.

NOTE: ALSO APPLICABLE WHERE ROLL CURBS EXIST

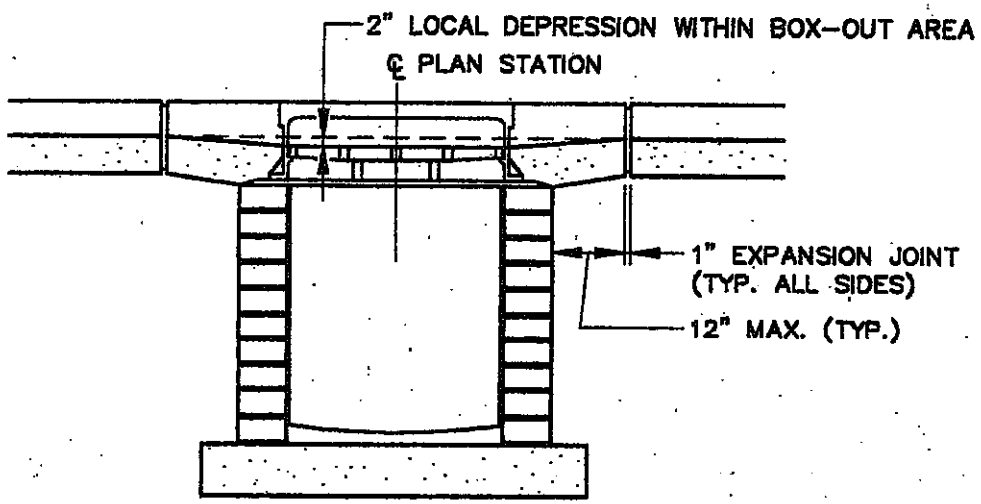

SECTION A – A

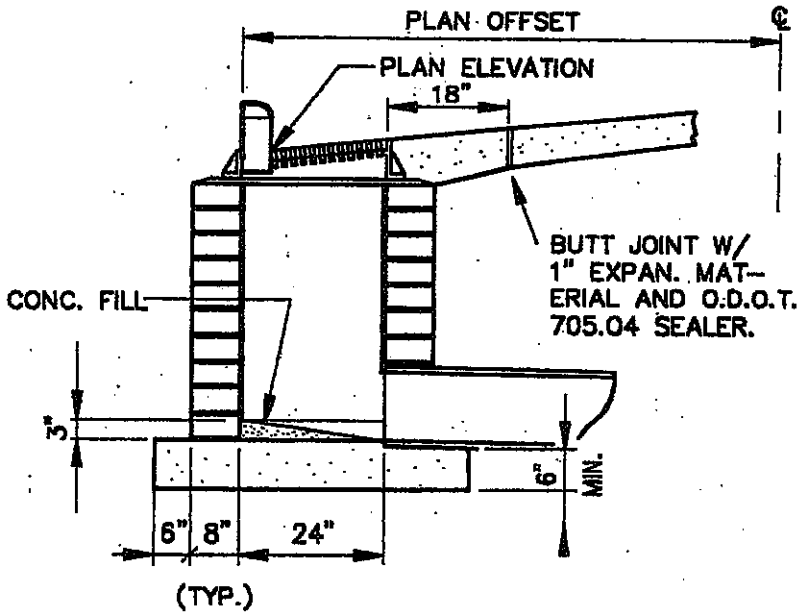

SECTION B – B

CURB INLET BOX-OUT DETAIL

A-7

2016 PROPOSED ROAD REPAIR PROGRAM MAP

THE CITY OF MENTOR

LAKE COUNTY, OHIO

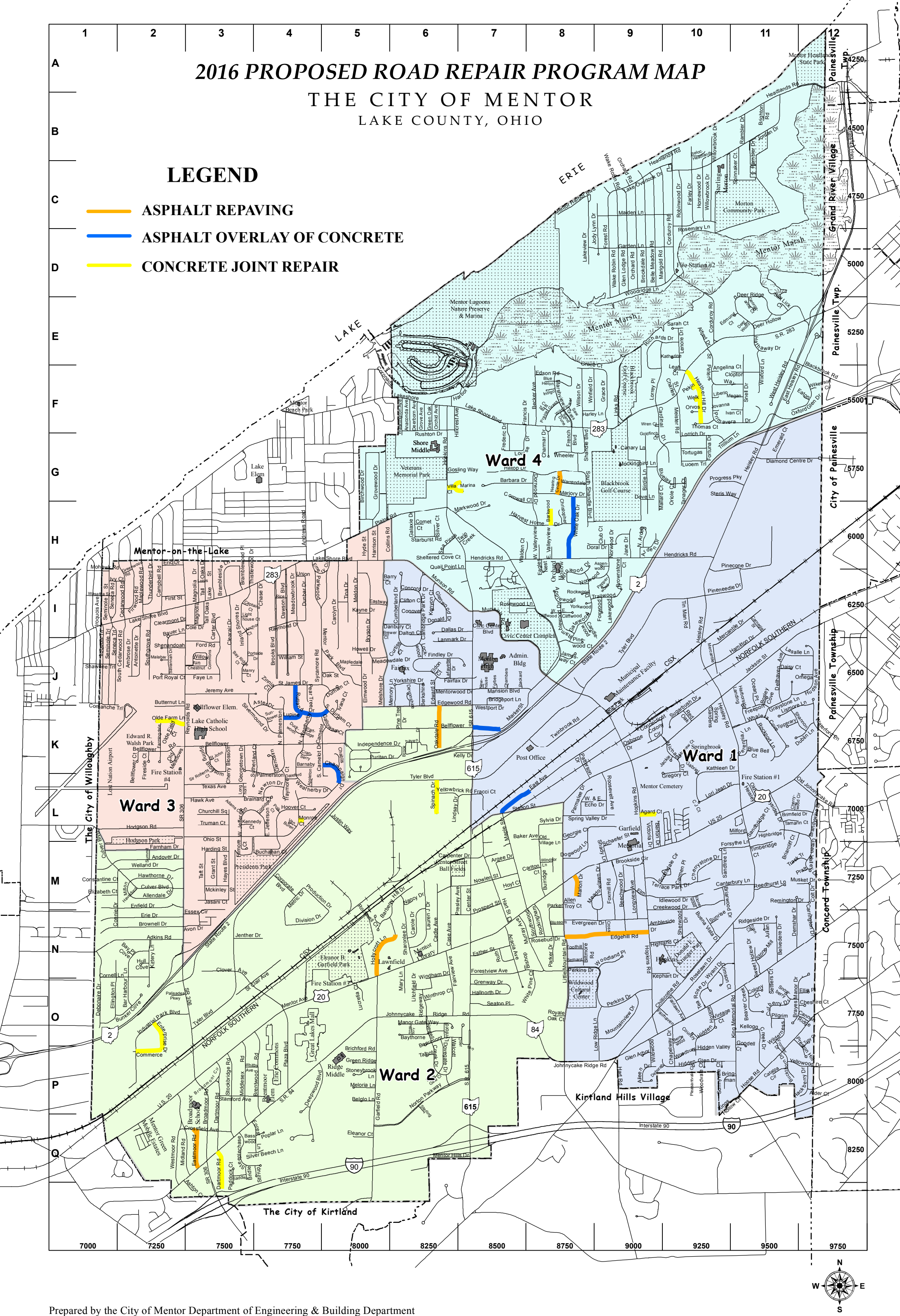

Prepared by the City of Mentor Department of Engineering & Building Department

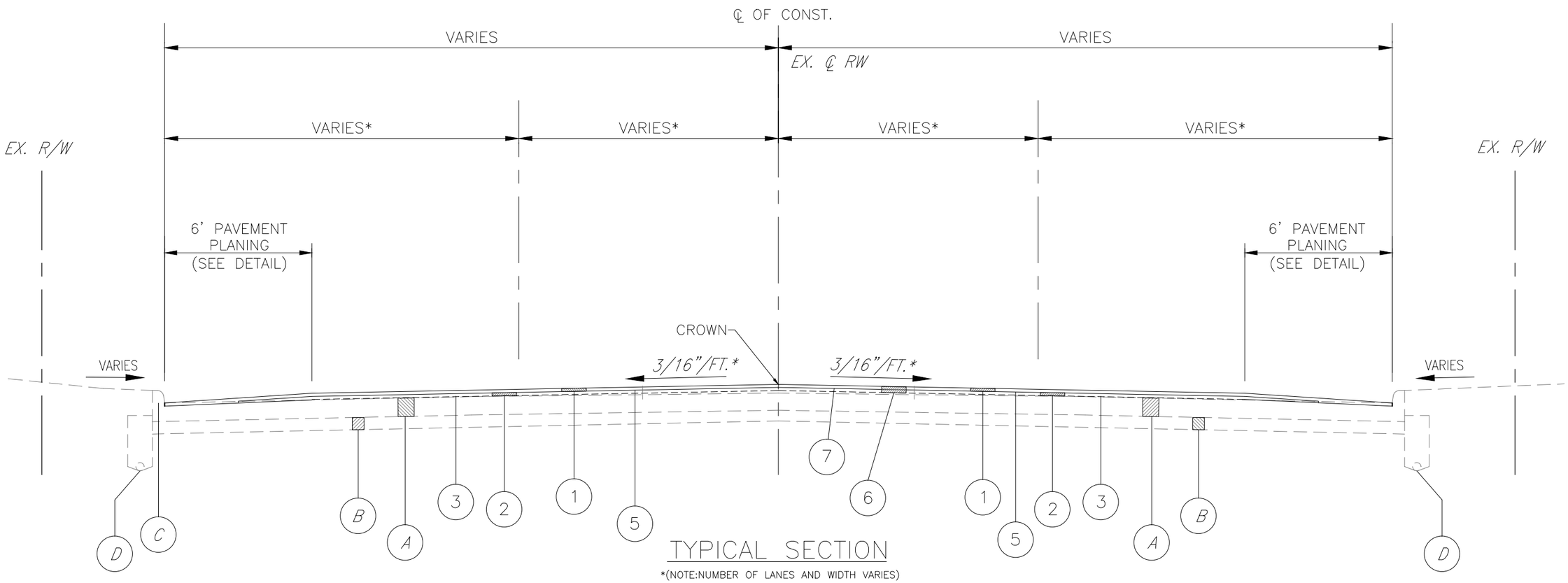

TYPICAL SECTION

*(NOTE:NUMBER OF LANES AND WIDTH VARIES)

* NOTE: MATCH EXISTING GRADE IN SUPERELEVATED SECTIONS

1. ITEM 441 – 1 1/2" ASPHALT CONCRETE SURFACE COURSE, TYPE 1 (448), PG 64–22
2. ITEM 441 – 1 1/2" ASPHALT CONCRETE INTERMEDIATE COURSE TYPE 1 (448), PG 64–22 (MARKET, EAST, RUTLAND, LUPINE, CHAMPAIGN, WHITE OAK ONLY)
3. ITEM 407 – TACK COAT, TRACKLESS, 702.13 FOR CONCRETE BASE AND LEVELING (0.1 GAL/SY)
4. ITEM 254 – PAVEMENT PLANING, PORTLAND CEMENT CONCRETE, 0" TO 1 1/2" (MARKET, EAST, RUTLAND, LUPINE, CHAMPAIGN, WHITE OAK ONLY)
5. ITEM 407 – TACK COAT, TRACKLESS, FOR INTERMEDIATE COURSE (0.05 GAL/SY)
6. ITEM 254 – PAVEMENT PLANING, BITUMINOUS, AS PER PLAN (1 1/2")
7. SPEC – HYBRID INTERLAYER PAVING MAT, GLASPAVE 25 (MARKET, EAST, RUTLAND, LUPINE, CHAMPAIGN, WHITE OAK ONLY)

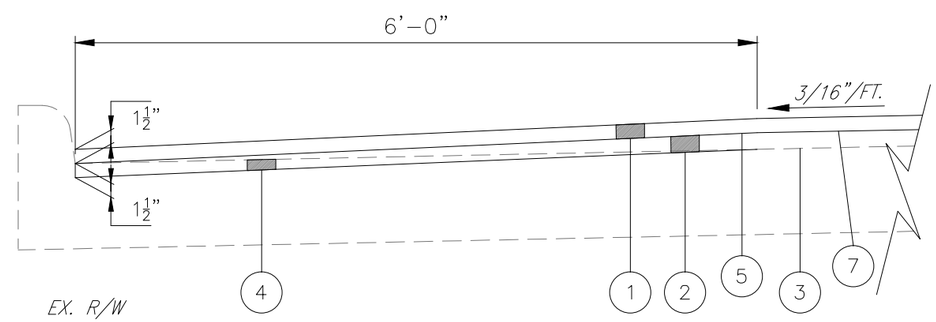

PAVEMENT PLANING DETAIL

(MARKET, EAST, RUTLAND, LUPINE, CHAMPAIGN, WHITE OAK)

EXISTING LEGEND

- (A) EXISTING PAVEMENT
- (B) EXISTING AGGREGATE BASE
- (C) CURB, WHERE APPLICABLE
- (D) 4" SHALLOW UNDERDRAIN

STANDARD CONSTRUCTION DRAWINGS				SUPPLEMENTAL SPECIFICATIONS	
BP–1.1	7–28–00	GR–2.1	1–16–04	800	10–16–09
BP–2.1	7–18–08	GR–4.1	4–18–03	832	5–5–09
BP–2.2	7–18–08				
BP–3.1	10–19–07	TC–71.10	1–16–09		
BP–5.1	7–28–00	TC–73.10	1–19–01		
BP–7.1	1–19–07	TC–82.10	4–19–02		
RM–1.1	7–18–08	MT–35.10	4–20–01		
		MT–95.31	7–17–09		
		MT–95.32	7–17–09		
		MT–99.20	1–16–09		

STATE OF OHIO
ALLEN EUGENE PENNINGTON
E-63942
REGISTERED
PROFESSIONAL ENGINEER

SUBMISSIONS / REVISIONS
–

2016 ROAD REPAIR PROGRAM
The City of Mentor, Ohio
TYPICAL SECTIONS

City of Mentor
8500 Civic Center Drive
Mentor, OH 44060
(440) 974–5740

CITY OF MENTOR INCORPORATED 1968

DATE: 12/17/15
DRAWN BY: JCM
CHECKED BY: AEP
APPROVED BY: AEP
F.B. No.____ Pg.____
SCALE:
HOR:
VERT:
CONTRACT No.

SHEET NO. T–1 OF

Drawing name: Q:\Acad dwgs\road repair\border.dwg Layout: Model plotted by: mcfarland