City of Mentor

BID SET

Tin Man Road
8" Water Main Extension

City of Mentor

November, 2016

Prepared by:
Brian Ashurst, P.E.
Assistant City Engineer,
Office of the Mentor City Engineer

Date 11/7/2016

Approved by:
David A. Swiger, P.E.
City Engineer

Date 11/7/16

CITY OF MENTOR OFFICIALS

ADMINISTRATION

Kenneth J. Filipiak, City Manager

David W. Malinowski, Finance Director

Richard A. Hennig, Law Director

David A. Swiger, P.E., City Engineer

Matthew Schweikert, Director of Public Works

Kenneth Kaminski, Director, Parks, Recreation and Public Lands

Ronald Traub, Director of Economic Development

Kevin Knight, Chief of Police

Robert Searles, Fire Chief

MEMBERS OF COUNCIL

Janet A. Dowling, President

John A. Krueger, Vice President

Sean P. Blake

Matthew E. Donovan

Ray Kirchner

Bruce R. Landeg

Scott J. Marn

Julie Schiavoni, Clerk of Council

ADVERTISEMENT FOR BIDS/PUBLIC NOTICE TO BIDDERS

Sealed proposals will be received at the office of the Purchasing Department, City of Mentor, 8500 Civic Center Boulevard, Mentor, Ohio until 12:00 Noon on November 23, 2016 and will be opened and read immediately thereafter for the following project:

TIN MAN ROAD 8" WATER MAIN EXTENSION
OPINION OF PROBABLE CONSTRUCTION COST: $115,000.00
EARLY START DATE: January 15, 2017
SUBSTANTIAL COMPLETION DATE: February 28, 2017
RESTORATION COMPLETION DATE: March 15, 2017

Bids must be in accordance with specifications advertised on the City of Mentor website: www.cityofmentor.com/category/rfp or RFP's will be available for pick-up at the Purchasing Office.

BY ORDER OF

Kenneth J. Filipiak
City Manager

Publish: *The News Herald*
November 10, 2016
November 16, 2016

TABLE OF CONTENTS

		Page No.
	Title Page	i
	Officials Page	ii
	Advertisement for Bids/Public Notice to Bidders	iii
	Table of Contents	iv – vi
SECTION 1	BID DOCUMENTS AND BID FORMS	
	Instructions to Bidders	BD.1 - BD.7
	Prices to Include	BD.8 – BD.10
ALL BID FORMS SHALL BE COMPLETED AND SUBMITTED WITH BID		
	Form of Non-collusion Affidavit	BF.1
	Corporate Resolution	BF.2
	Proposed Subcontractors	BF.3
	Experience Record	BF.4
	Insurance Agent Affidavit	BF.5
	Supplemental Bond Acknowledgement	BF.6
	Bid Security	BF.7
	Bidder Qualifications	BF.8 – BF.9
	Proposal Form	BF.10 – BF.11
	Signature Page (BF.12)	**SEE BELOW**
	ALL BIDS SUBMITTED MUST INCLUDE THE REQUIRED BID DOCUMENTS AND A PROPERLY EXECUTED SIGNATURE PAGE (BF.11)	
	SIGNATURE PAGE AVAILABLE *ONLY* BY CONTACTING VERONICA FETSKO, FETSKO@CITYOFMENTOR.COM OR 440-974-5776.	
SECTION 2	CONTRACT FORMS	
	Notice of Award	CF.1
	Contract and Certificates of Fiscal Officer & Legal Counsel	CF.2 - CF.3
	Contract Bond, Certificates of Insurance & Worker's Comp.	CF.4
	Delinquent Personal Property Statement	CF.5
	Notice to Proceed	CF.6
	Notifications, Certifications, Affidavits	N.1 – N.2
	Affidavit of Compliance with ORC Section 3517.13 (Political Contribution Limitations)	
	Unresolved Findings of Recovery	
SECTION 3	GENERAL CONDITIONS, EJCDC No. C-700 (2007)	1 – 62
SECTION 4	SUPPLEMENTARY CONDITIONS	SC.1 - SC.6

SECTION 5 SPECIFICATIONS

DIVISION 1 - GENERAL REQUIREMENTS

01010	SUMMARY OF WORK
01020	GENERAL REGULATIONS AND PERMITS
01021	INDUSTRY STANDARDS
01032	PROJECT MEETINGS
01034	CONTRACTOR'S USE OF SITE
01035	PROGRESS SCHEDULE
01038	SAMPLING AND TESTING
01041	PRE CONSTRUCTION VIDEO
01042	QUALIFICATIONS OF TRADESMEN
01060	SUBMITTALS
01088	TEMPORARY TRAFFIC CONTROL DEVICES
01091	ENVIRONMENTAL PROTECTION
01099	FINAL COMPLIANCE AND SUBMITTALS
01600	MATERIAL AND EQUIPMENT

DIVISION 2 - SITE CONSTRUCTION

02016	EXISTING SITE CONDITIONS
02020	DEWATERING
02025	EXISTING UTILITIES AND STRUCTURES
02055	REMOVAL AND ABANDONMENT OF EXISTING FACILITIES
02100	SITE PREPARATION
02105	CLEARING AND GRUBBING
02210	TRENCHING, BACKFILLING AND COMPACTING
02400	SHORING
02514	DRAINAGE STRUCTURES
02520	DRAINS AND SEWERS
02540	EROSION CONTROL
02558	INDENTIFICATION / LOCATION GUIDE
02600	PIPE INSTALLATION AND RELATED MATERIALS
02610	PAVING AND RESURFACING
02901	SODDING, SEEDING AND MULCHING
03301	CONCRETE
03309	CONCRETE - UNREINFORCED

		Page No.
SECTION 6	STANDARD SPECIFICATIONS	SS.1
SECTION 7	SPECIFIC PROJECT REQUIREMENTS	SR.1
SECTION 8	WAGE RATES	
	State Prevailing Wage Rate Determination Schedule	
SECTION 9	DRAWINGS	
	Detailed Drawings	1 - 8

SECTION 1
BID DOCUMENTS AND BID FORMS

INSTRUCTIONS TO BIDDERS

PART 1 GENERAL

1.1 Sealed bids shall be received by the Owner at the location specified and until the time and date specified in the Advertisement for Bids/Public Notice to Bidders.

1.2 Each bid shall contain the full name and address of each person or company interested in said bid. If no other person be so interested, the Bidder shall distinctly so state the fact.

1.3 Bid forms must be completed in ink or by typewriter. Any corrections to the bid forms prior to submission must be initialed by the person signing the bid. Failure to submit any bid form(s) or other required document(s) may be cause for rejection of the bidder's bid at the sole discretion of the Owner.

1.4 Bids by Corporations must be executed in the corporate name by the President, Vice President, or other officer accompanied by evidence of authority to sign and the corporate seal must be affixed and attested by the Secretary on the Corporate Resolution form.

1.5 Bids by partnerships must be executed in the partnership name and signed by a partner, whose title must appear under the signature.

1.6 All names must be typed or printed below the signature.

1.7 The bid shall contain an acknowledgment of receipt of all Addenda.

1.8 If a Bidder wishes to withdraw his bid prior to the opening of bids, he shall state his purpose in writing to the Owner before the time fixed for the opening, and when reached it shall be handed to him unread.

1.9 After the opening of bids, no Bidder may withdraw his bid for a period of 60 days.

PART 2 EXAMINATION OF CONTRACT DOCUMENTS AND SITE

2.1 Before submitting a bid, each Bidder must

A. Examine the Contract Documents thoroughly.

B. Visit the site to familiarize himself with local conditions that may in any manner affect cost, progress, or performance of the work.

C. Familiarize himself with Federal, State, and local laws, ordinances, rules, and regulations that may in any manner affect cost, progress, or performance of the work.

D. Study and carefully correlate Bidder's observations with the Contract Documents.

2.2 Before submitting his bid each Bidder will, at his own expense, make such additional investigations and tests as the Bidder may deem necessary to determine his bid for performance of the work in accordance with the time, price and other terms and conditions of the Contract Documents.

2.3 Upon request, the Owner will provide each Bidder access to the site to conduct such reasonable investigations and tests as each Bidder deems necessary for submission for his bid.

2.4 The lands upon which the work is to be performed, rights-of-way for access thereto, and other lands designated for use by Bidder in performing the work are identified on the Drawings.

2.5 The submission of a bid will constitute an incontrovertible representation by the Bidder that he has complied with every requirement of this section and that the Contract Documents are sufficient in scope and detail to indicate and convey understanding of all terms and conditions for performance of the work.

PART 3 ESTIMATED QUANTITIES

3.1 In Unit Price Contracts, the quantities of the work itemized in the bid are approximate only and the bidders are hereby notified that the estimated quantities made by the Engineer are merely for the guidance of the Owner in comparing on a uniform basis all bids received for the work.

3.2 The contract quantities, where itemized, are based on plan horizontal and vertical dimensions unless otherwise specified. It is the Contractor's responsibility to verify and determine actual quantities of materials such as pipe, pavement, subgrade, etc. in his ordering materials.

3.3 Payments, except for lump sum contracts and except for lump sum items in unit price contracts, will be made to the Contractor only for the actual quantities of work performed or materials furnished in accordance with the plans and specifications. It is understood that the scheduled quantities of work to be done and materials to be furnished for items labeled as "Contingency" may be increased or diminished by any amount and the awarded quantity of all other items may be increased or diminished up to 15% without in any way invalidating the bid unit prices.

3.4 The successful Bidder will be required to furnish the Owner with a complete breakdown of the lump sum bid items, to the satisfaction of the Engineer/Architect, before signing the Contract documents.

PART 4 CONTRACTOR'S QUALIFICATION

4.1 Bidder shall provide information relating to similar projects completed within the past 5 years and shall include a list of projects currently under construction including status and contact person. Bidders experience shall demonstrate capabilities to undertake this type of project.

4.2 Bidder shall own, have rental or lease agreements for, or otherwise have readily available any and all equipment and tools necessary for proper execution of the work. The Owner reserves the right to request lists of equipment or tools available for the project including sources.

4.3 Bidder shall provide pertinent information to the Owner relative to any pending suits or outstanding liens. If no information is provided by the Bidder, the Owner shall assume that any such suits or liens do not exist.

4.4 The Owner may require similar information on any or all subcontractors proposed by the Bidder.

PART 5 SUBCONTRACTORS

5.1 The Bidder shall state on the appropriate bid form the names of all Subcontractors proposed and the items of work they are to be assigned. All work not assigned to a Subcontractor shall be assumed by the Owner to be performed by the Bidder.

5.2 The successful Bidder shall not subcontract work totaling more than 50% of the total contract.

5.3 The Owner reserves the right to approve all subcontractors proposed by the Bidder. If the Owner, after due investigation, rejects the use of a proposed subcontractor, the apparent successful Bidder may either submit an acceptable substitution without increase in bid price or decline substitution and withdraw his bid without sacrificing his bid security. Any listed subcontractor to whom the Owner does not make written objection prior to award of contract, shall be deemed acceptable to the Owner.

5.4 Requests for changes of Subcontractor by the Bidder after the award shall be subject to the Owner's approval and shall not change the contract bid prices.

5.5 No contractor shall be required to employ any Subcontractor, person or organization against whom he has reasonable objection.

PART 6 BID REVIEW BY OWNER

6.1 The Owner reserves the right to reject any and all bids, to waive as an informality any and all irregularities, and to disregard all nonconforming, nonresponsive or conditional bids.

6.2 All extensions and totals of unit prices and quantities submitted as part of the bid shall be considered informal until verified by the Owner. All bids must be made on the forms contained herein and the bid prices must be written therein, in figures only. Unit prices shall be separately written for "Unit Price Labor," "Unit Price Material," and "Total Unit Price" for each item listed. Should an error in addition and/or multiplication be determined while checking the Contractor's math and verifying his total bid, the "Unit Price Labor" and the "Unit Price Material" figures shall govern in determining the correct "Total Unit Price" and the correct "Item Total." Each bidder must bid on all Items, Alternates, Deductions, and Additions contained in the Bidding Forms. All bids not in conformity with this notice may be considered informal and may be rejected.

6.3 In evaluating bids, the Owner may consider:

A. The qualifications and experience of the Bidder, proposed subcontractors, and principal material suppliers as outlined in the plans and specifications.

B. Financial ability and soundness of the Bidder and proposed subcontractors.

C. Completeness of all bid forms and bid requirements.

D. Alternates and unit prices requested in the Bid Forms.

E. Unit prices or schedules of values that are or appear to be unbalanced.

F. Previous contractual experience with the Owner.

G. Whether or not the bid package complies with the prescribed requirements.

H. Any other matter allowed by law or local ordinance or resolution.

6.4 Owner may conduct further investigations as he deems necessary to assist in the evaluation of any bid and to establish the responsibility, qualifications, and financial ability of the Bidders, proposed Subcontractors, and other persons and organizations to do the work in accordance with the Contract Documents to Owner's satisfaction within the prescribed time.

6.5 Owner reserves the right to reject the bid of any Bidder who does not pass any such evaluation to Owner's satisfaction.

6.6 The Contract award shall be based on the lowest and best bid or lowest responsive and responsible bid (as applicable for the public contracting agency receiving bids) for the base bid and selected alternate items (if any) for this project.

PART 7 BID SECURITY

7.1 Each bid must be accompanied by a certified or cashier's check in the amount of 10% of the amount bid, an irrevocable letter of credit in the amount of 10% of the amount bid or an original bond in the amount of 100% of the amount bid per ORC 153.54 and

153.571. The certified or cashier's check, or irrevocable letter of credit shall be from a financial institution authorized to transact business in the State of Ohio and acceptable to the Owner. The bond shall be underwritten by a Surety Company authorized to transact business in the State of Ohio having an Ohio agent and listed on the most current Department of the Treasury Circular 570, "Surety Companies Acceptable on Federal Bonds." The bond shall be a "Bid Guarantee and Contract Bond" ("rollover bond") per O.R.C. sections 153.54 and 153.571 submitted for the full amount of the bid including all alternates, if any.

If bid security is made by bond, the Bidder and his Surety shall sign the Supplemental Bond Acknowledgement form and submit with his bid.

7.2 The certified or cashier's check, irrevocable letter of credit, or bond shall be made payable to the Owner and shall serve as a guarantee that in the event the bid is accepted and a contract is awarded to the successful Bidder, the contract will be executed by the bidder including any certifications, certificates or additional bonds required by the contract.

7.3 Failure on the part of the successful Bidder to execute the contract documents will cause the certified or cashier's check, irrevocable letter of credit, or bond to be forfeited to the Owner as damages.

A. If the Owner awards the contract without rebidding, the Bidder (and the Surety on his bond if a bond was submitted) shall be liable to the Owner for a penal sum not to exceed the difference between the low bid and the next lowest bidder or 10% of the amount of the bid, whichever is less.

B. If the Owner does not award the Contract to the next lowest Bidder, but resubmits the project for bidding; the Bidder (and the Surety on his bond if a bond was submitted) shall be liable to the Owner for a penal sum not to exceed the costs in connection with the resubmission of bids or 10% of the amount of the bid, whichever is less.

7.4 Checks or letters of credit for bid security of all bidders will be returned in the manner and timeframe stipulated in the Ohio Revised Code.

PART 8 CONTRACT BOND

8.1 As security for faithful performance and payment of all obligations under the Contract, the Owner shall require and the successful Bidder shall furnish either:

A. "Bid Guarantee and Contract Bond" (AKA "rollover bond") per O.R.C. sections 153.54 and 153.571.

B. Contract Bond per Ohio Revised Code Sections 153.54 and 153.57, in the amount of 100% of the Contract Price. The Contractor and his Surety shall sign the Supplemental Bond Acknowledgement form and submit with the Contract forms.

8.2 The bond shall be underwritten by a Surety Company authorized to transact business in the State of Ohio having an Ohio agent and listed on the most current Department of the Treasury Circular 570, "Surety Companies Acceptable on Federal Bonds."

8.3 The contract bond shall cover correction of the work for the period stated in the specifications and the correction period shall start upon Final Acceptance of the entire project and final payment by the Owner.

8.4 Nothing in the performance of the Engineer's service to the Owner in connection with this project shall in any way imply any undertaking for the benefit of the successful Bidder, its subcontractor(s), or the surety of any of them.

PART 9 AWARD AND EXECUTION OF CONTRACT

9.1 After the Owner's legislative body awards the project, the successful bidder will receive the unsigned contract documents. Within 10 days after their receipt, the successful Bidder shall sign and deliver to the Owner said contract documents including any certifications, certificates, or additional bonds required by the contract.

9.2 The Owner shall execute the Contract within 60 days after the day of the bid opening. When necessary and by mutual consent between the Owner and the Successful Bidder, this 60-day period may be extended.

9.3 The date of the Owner's signature on the Contract Agreement shall be the effective contract date.

9.4 The Owner shall execute and deliver to the successful Bidder one set of fully executed contract documents.

PART 10 INSURANCE

10.1 Verification of limits for public liability, property damage, automobile, Worker's Compensation, or any other insurance required by the provisions of this Contract must be submitted to the Owner prior to execution of the Contract.

10.2 All insurance shall be endorsed so that it cannot be cancelled for non-payment of premium for 10 days or cancelled or non-renewed for any other reason in less than 30 days after a written notice of such proposed action by the insurer is given to the Owner. The cancellation clause on the Certificate(s) of Insurance shall read as specified in the Supplementary Conditions and failure to submit an insurance certificate and/or policy endorsement verifying same shall be reason for the Owner to consider the Contractor non-responsive in complying with the requirements for contract execution and may be cause for forfeiture of the Bid Security to Owner.

10.3 The Contractor’s Liability Insurance policy(s) shall be endorsed such that limits are on a Per Project basis.

10.4 The Contractor shall also provide an Owner's and Contractor's Protective Policy.

PART 11 NON-COLLUSION AFFIDAVIT

11.1 Each bid must be accompanied by a completed Noncollusion Affidavit provided within the contract documents.

11.2 Where there is reason to believe collusion or combination among bidders exists, the Owner reserves the right to reject the bid of those concerned.

PART 12 DELINQUENT PERSONAL PROPERTY STATEMENT

12.1 Included with the contract documents is a Delinquent Personal Property Statement to be filled out by the successful Bidder.

12.2 The statement shall be sent to both the County Auditor and the County Treasurer. A signed copy shall remain in the contract documents as well.

PART 13 ORIGINAL DOCUMENTS

13.1 All bid forms, contract forms, bonds and any other bid documents or contract documents requiring signatures shall be submitted with original signatures. No photo copies or faxed copies of signed documents shall be accepted.

PART 14 ADDENDA

14.1 The bidder shall be responsible to obtain Addenda from the web at www.cityofmentor.com/category/rfp.

END OF SECTION 1/2012

PRICES TO INCLUDE

PART 1 - GENERAL

Any work shown on the plans or required in the specifications but not paid for separately as a bid item shall be included in the cost of other bid items. The amount bid for each Bid Item shall include the following:

1.1 All labor, materials, tools, equipment, and transportation necessary for the proper execution of the work in accordance with the Contract Documents.
1.2 All assistance required by the Engineer to verify compliance with the Contract Documents, including measuring for final pay quantities.
1.3 Project coordination and scheduling.
1.4 All provisions necessary to protect workmen, the general public, and property along the work in accordance with the Contract Documents.
1.5 Reimbursement to Owner for costs of re-inspection or re-testing of any work not installed in compliance with the Contract Documents.
1.6 Construction staking of the improvements.
1.7 All erosion control measures commensurate with the Contractor's means and methods.
1.8 Bonds and Insurances (including "Owner/Contractor Protective Policy," and any endorsements, as required).

PART 2 - ITEMS

2.1 Installation of Water Main

1. Payment: Item total as stated in the Proposal.

2. Measurement: Determine the value of work completed to date from schedule of values.

3. Includes: All costs associated with installing water main, including the proposed connection method to the existing water main, furnishing and installing fittings and appurtenances as shown on the construction drawings with exception to any materials defined as being provided by the Owner in the contract documents. Included under this Item is trench excavation, furnishing and placement of any required bedding material as required by the Owner's representative or governing authority, providing and placement of the backfill material (unless defined as premium backfill per the detail drawing on the construction drawings of the appropriate governing authority) up to the base of the surface restoration as required by the Owner or governing authority. Also included under this item is any necessary trench shoring and temporary handling of excavated or backfill materials.

2.2 Installation of Hydrant Assembly

1. Payment: Item total as stated in the Proposal.

2. Measurement: Determine the value of work completed to date from schedule of values.

3. Includes: All costs associated with installing the hydrant assembly, furnishing and installing fittings and appurtenances as shown on the construction drawings with exception to any materials defined as being provided by the Owner in the contract documents. Included under this Item is trench excavation, furnishing and placement of any required bedding material as required by the Owner's representative or governing authority, providing and placement of the backfill material (unless defined as premium backfill per the detail drawing on the construction drawings of the appropriate governing authority) up to the base of the surface restoration as required by the Owner or governing authority. Also included under this item is any necessary trench shoring and temporary handling of excavated or backfill materials

2.3 Installation of Gate Valves

1. Payment: Item total as stated in the Proposal.

2. Measurement: Determine the value of work completed to date from schedule of values.

3. Includes: All costs associated with installing a resilient seated gate valve, furnishing and installing fittings and appurtenances as shown on the construction drawings with exception to any materials defined as being provided by the Owner in the contract documents. Included under this Item is trench excavation, furnishing and placement of any required bedding material as required by the Owner's representative or governing authority, providing and placement of the backfill material (unless defined as premium backfill per the detail drawing on the construction drawings of the appropriate governing authority) up to the base of the surface restoration as required by the Owner or governing authority. Also included under this item is any necessary trench shoring and temporary handling of excavated or backfill materials.

2.4 Rigid Pavement Replacement

1. Payment: Item total as stated in the Proposal.

2. Measurement: Determine the value of work completed to date from schedule of values.

3. Includes: All costs associated with the permanent repair and restoration of disturbed pavement areas per the appropriate governing authority(s) detail drawing located on the construction drawings.

2.5 Traffic Control

1. Payment: Item total as stated in the Proposal.

2. Measurement: Determine the value of work completed to date from schedule of values.

3. Includes: All costs associated with the traffic control during the construction of the project as regulated by the governing authority(s).

2.6 CONTINGENCY / DISCRETIONARY ALLOWANCE

Basis of Payment

A Contingency/Discretionary Allowance has been included in the bid proposal to be utilized as directed by the Engineer for unscheduled work items not included on the proposal forms or other changes in the work. Any portion of the allowance not utilized shall be credited to the Owner.

2.7 ITEM 659: SEEDING AND MULCHING

Basis of Payment

The unit price bid shall include furnishing and placement of topsoil, testing of topsoil, finish grading, seed, fertilizers, lime, water, maintenance, mowing, and all else necessary to establish grassed turf over all disturbed areas to be restored in accordance with the contract drawings.

FORM OF NONCOLLUSION AFFIDAVIT

STATE OF)
) SS
COUNTY OF)

_____, being first duly sworn, deposes and says
(Individual Name)

that he/she is _____ of _____
(Sole Owner, Partner, President, Secretary, etc.) (Corporation Name)

the party making the proposal or bid; that such bid is genuine and not collusive or sham; that said Bidder has not colluded, conspired, connived, or agreed, directly or indirectly with any Bidder or person, to put in a sham bid, or that such other person shall refrain from bidding, and has not in any manner, directly or indirectly sought by agreement or collusion or communication or conference, with any person, to fix the bid price of affiant or any other Bidder, or to fix any overhead, profit, or cost element of said Bid price, or of that of any other Bidder, or to secure any advantage against the Owner, or any person interested in the proposed Contract; and that all statements contained in said proposal or bid are true; and further, that such Bidder has not, directly or indirectly submitted this Bid, or the contents thereof, or divulged information or data relative thereto to any association or to any member or agent thereof.

_____
Affiant

Subscribed and sworn to before me this _____ day of _____ , 20 _____.

_____
Notary Public

My Commission Expires: _____

CORPORATE RESOLUTION

I, _____,
(Individual Name)

Secretary of _____ an _____ Corporation
(Corporation Name) (State)

hereby certify that the Board of Directors of said Corporation on the _____day of

_____, 20_____, adopted a resolution authorizing the _____ of this
(Corporation Title, i.e., President, Vice President, etc.)

Company, namely, _____, to sign bid proposals, sign and
(Individual Name)

enter into any and all contracts and other instruments, sign and/or authorize bid guaranty and performance bonds for the purpose of furnishing labor and materials at such price and upon such terms and conditions, including any amendments or modifications thereto, as said

_____ in his sole discretion shall deem best, and that said actions
(Corporation Title, i.e., President, Vice President, etc.)

shall be binding upon the Corporation.

IN WITNESS WHEREOF, I have hereunto set my hand and affixed the seal of said

Corporation at _____, _____ this _____ day
(City) (State)

of _____ , 20___, and I further certify that said resolution is still in

full force and effect.

_____

Corporate Secretary

PROPOSED SUBCONTRACTORS

The Bidder is required to state in the spaces provided below, the Subcontractors he proposes to use to accomplish the work under this Contract. The items and specific amounts of work assigned to each listed Subcontractor shall also be outlined. Duplicate this sheet as needed.

1. Name: _____
   Address: _____
   City/State/Zip: _____
   Description: _____
   _____
   Phone: ( ) _____ Amount: $ _____ % of Contract: _____

2. Name: _____
   Address: _____
   City/State/Zip: _____
   Description: _____
   _____
   Phone: ( ) _____ Amount: $ _____ % of Contract: _____

3. Name: _____
   Address: _____
   City/State/Zip: _____
   Description: _____
   _____
   Phone: ( ) _____ Amount: $ _____ % of Contract: _____

4. Name: _____
   Address: _____
   City/State/Zip: _____
   Description: _____
   _____
   Phone: ( ) _____ Amount: $ _____ % of Contract: _____

5. Name: _____
   Address: _____
   City/State/Zip: _____
   Description: _____
   _____
   Phone: ( ) _____ Amount: $ _____ % of Contract: _____

EXPERIENCE RECORD

The Bidder is required to state the character of previous work, give references, and such other detailed information as will enable the Owner to determine capability, responsibility, experience, skill, and financial standing. Provide data for the last five (5) years. Duplicate this sheet as needed. **Information submitted in an alternate format MUST contain all the information requested on this page.**

Project Name: _____

Description/Scope of Bidder's Work: _____

On this project you were a ____ Prime Contractor **OR** ____ Sub Contractor to _____

Total Project Cost: $ _____ Your Contract or Subcontract Amount: $ _____

% Complete (if in progress) _____% or Date Completed (if complete): _____

Project Owner: _____

Owner Contact: _____ Phone: ( ) _____

Engineer/Arch. Firm: _____

Engineer/Arch. Contact: _____ Phone: ( ) _____

Your Bonding Company on this project (if any): _____

Project Name: _____

Description/Scope of Bidder's Work: _____

On this project you were a ____ Prime Contractor **OR** ____ Sub Contractor to _____

Total Project Cost: $ _____ Your Contract or Subcontract Amount: $ _____

% Complete (if in progress) _____% or Date Completed (if complete): _____

Project Owner: _____

Owner Contact: _____ Phone: ( ) _____

Engineer/Arch. Firm: _____

Engineer/Arch. Contact: _____ Phone: ( ) _____

Your Bonding Company on this project (if any): _____

Project Name: _____

Description/Scope of Bidder's Work: _____

On this project you were a ____ Prime Contractor **OR** ____ Sub Contractor to _____

Total Project Cost: $ _____ Your Contract or Subcontract Amount: $ _____

% Complete (if in progress) _____% or Date Completed (if complete): _____

Project Owner: _____

Owner Contact: _____ Phone: ( ) _____

Engineer/Arch. Firm: _____

Engineer/Arch. Contact: _____ Phone: ( ) _____

Your Bonding Company on this project (if any): _____

BIDDER'S INSURANCE AGENT'S AFFIDAVIT

PROJECT: **Tin Man Road 8" Water Main Extension**

OWNER: City of Mentor

I, _____, _____, first being duly
(Name) (Title)
sworn do state the following:

(a) that I am an Insurance Agent licensed to transact business in the State of Ohio;

(b) that I have reviewed the insurance requirements in the bid documents and have noted therein the requirements on insurance including any policy modifications, cancellation and non-renewal provisions, and any additional policies or endorsements needed;

(c) that I am familiar with the insurance that _____
(Bidder's Company Name)
has in force, and that its insurance meets the contract requirements or that it can be amended or endorsed to meet the contract requirements (with standard industry exclusions) until the current policy expiration or until cancelled with notice per the specifications or additional policies and/or endorsements can be provided to the Contractor;

(d) that all additional policies and/or endorsements required in the specifications are available;

(e) that if an award of contract is made to the Bidder an insurance certificate(s) [most current version ACORD 25] and/or binder(s) which fully complies with all insurance requirements in the contract will be issued within three (3) business days of notification from the contractor and the contractor approving any additional policies or endorsements needed to fully comply with the insurance requirements in the contract;

(f) that I have advised my client of the cost of all additional policies, amendments, and/or endorsements so that he can include same in his bid;

(g) that the cancellation clause in the policy meets the specifications or that it can be amended by an endorsement;

(h) that this document neither affirmatively or negatively amends, extends or alters the terms of or coverage afforded by the policy referenced herein.

Further, Affiant sayeth naught.

_____ _____
(Agent's Signature) Agency Name

_____ _____
(Agent's Name) Agency Address

_____
Agency City, State and Zip Code

_____ _____
(Phone) (Fax)

_____
(E-mail)

SUPPLEMENTAL BOND ACKNOWLEDGEMENT

PROJECT: **Tin Man Road 8" Water Main Extension**

OWNER: City of Mentor

If the bidder submits a Bid Guaranty and Contract Bond (AKA Rollover or Bid/ Performance/ Payment/ Warranty Bond) per O.R.C. Sections 153.54 and 153.571 the following shall be completed, signed, and submitted with the bid:

By submission of the attached bid and these presents, the undersigned bidder and his surety hereby acknowledge that the attached bond shall cover and warrant all work for the correction period per the General Conditions and as supplemented or amended elsewhere in these Contract Documents, which period is __one__ year(s) commencing on the final acceptance of the work by Owner. Any proceeding, legal or equitable, under this Bond may be instituted in any court of competent jurisdiction in the location in which the project or part of the project is located and shall be instituted within one year from the last day of the correction period under the project or within one year after the Surety refuses or fails to perform its obligations under this Bond, whichever first occurs.

BIDDER		**SURETY**	
SIGNATURE:	_____	SIGNATURE:	_____
NAME:	_____	NAME:	_____
TITLE:	_____	TITLE:	_____
DATE:	_____	DATE:	_____
PHONE NO.:	_____	PHONE NO.:	_____

*Attach Power of Attorney

If the Bidder submits a Certified or Cashier's check, Irrevocable Letter of Credit and is awarded a contract by the Owner, the following shall be completed, signed, and submitted with the Contract Bond (AKA Performance/Payment/Warranty Bond) per ORC Sections 153.54 and 153.57.

By signature of the attached Contract and these presents the undersigned contractor and his surety acknowledge that the attached Bond shall cover and warrant all work for the correction period per the General Conditions and as supplemented or amended elsewhere in these Contract Documents, which period is _one__ year(s) commencing on the final acceptance of the work by Owner. Any proceeding, legal or equitable, under this Bond may be instituted in any court of competent jurisdiction in the location in which the project or part of the project is located and shall be instituted within one year from the last day of the correction period under the project or within one year after the Surety refuses or fails to perform its obligations under this Bond, whichever first occurs.

BIDDER		**SURETY**	
SIGNATURE:	_____	SIGNATURE:	_____
NAME:	_____	NAME:	_____
TITLE:	_____	TITLE:	_____
DATE:	_____	DATE:	_____
PHONE NO.:	_____	PHONE NO.:	_____

*Attach Power of Attorney

BID SECURITY

CONTRACTOR SHALL STAPLE ONE OF THE FOLLOWING FORMS OF BID SECURITY TO THE FRONT OF THIS PAGE AND SUBMIT WITH THE BID.

CERTIFIED OR CASHIER'S CHECK FOR 10% OF THE AMOUNT BID

OR

IRREVOCABLE LETTER OF CREDIT FOR 10% OF THE AMOUNT BID

OR

BOND (BID/PERFORMANCE/PAYMENT" BOND, a.k.a., "ROLLOVER BOND") FOR

100% OF THE AMOUNT BID PER ORC SECTIONS 153.54 AND 153.571

STATEMENT OF BIDDER QUALIFICATIONS

BIDDER NAME (print/type): _____

BIDDER ADDRESS: _____

_____

BIDDER CONTACT: _____

BIDDER PHONE NUMBER: _____

BIDDER FAX NUMBER: _____

BIDDER E-MAIL: _____

Federal Tax Identification Number: _____

State Tax Identification Number: _____

STATEMENT OF BIDDER QUALIFICATIONS

1. Years in business providing the goods or service requested in this bid. _____

2. Please list on a separate sheet(s), contracts with municipalities previous and presently held. Please list by community name, contact person, address, phone number, and scope of project (starting with the most recent).

3. Is your company in satisfactory financial condition? Yes_____ No _____

4. How many miles is your facility from the Mentor Municipal Center? _____

5. Please list on a separate sheet(s) the equipment to be used in fulfilling this contract.

6. Identify the project manager who will be assigned to this project and applicable years of experience managing comparable jobs.

_____

For the following questions, on a separate sheet please describe in full the circumstances for any "Yes" answer.

7. Has your company had any business interruptions as a result of financial conditions in the past two (2) years? Yes_____ No _____

8. Has your company been rejected for a public contract despite being a low bidder for any reason? Yes_____ No _____

9. Has your company had any claims against or a performance bond cancelled? Yes_____ No _____

10. Has your company paid penalties or liquidated damages imposed as a result of delay on a public project? Yes_____ No _____

11. Has your company been found to have committed an unfair labor practice or any other employment/labor law violation in such areas as discrimination, prevailing wage, Workers Compensation or OSHA? Yes_____ No _____

12. Has your company in the last three (3) years had a municipal contract cancelled or terminated? Yes_____ No _____

Proposal to the City of Mentor
Tin Man Road 8" Water Main Extension 2016

REF. NO.	DESCRIPTION	QTY.	MEASURE UNITS	UNIT PRICE LABOR	UNIT PRICE MATERIAL	TOTAL UNIT PRICE	ITEM TOTAL
1	8" DIP WATER MAIN (POLYWRAPPED)	1355	LF	$	$	$	$
2	TYPE II HYDRANT ASSEMBLY	1	EACH	$	$	$	$
3	INSTALL HYDRANT ASSEMBLY	1	EACH	$	$	$	$
4	6" DIP WATER MAIN	2	LF	$	$	$	$
5	6" GATE VALVE WITH VALVE BOX	1	EACH	$	$	$	$
6	8" X 6" X 8" MJ TEE	1	EACH	$	$	$	$
7	6" MEG-A-LUGS	3	EACH	$	$	$	$
8	8" GATE VALVE WITH VALVE BOX	5	EACH	$	$	$	$
9	12" X 8" MJ TAPPING SLEEVE & VALVE	2	EACH	$	$	$	$
10	8" X 8" X 8" MJ TEE	1	EACH	$	$	$	$
11	8" MEG-A-LUGS	29	EACH	$	$	$	$
12	8" 45 DEG. MJ BEND W/ FIELD LOK / SURE STOP GASKETS	3	EACH	$	$	$	$
13	8" 22.5 DEG. MJ BEND	3	EACH	$	$	$	$
14	8" 11.25 DEG MJ BEND	3	EACH	$	$	$	$
15	8" MJ PLUG	1	EACH	$	$	$	$
16	CUT & CAP EXISTING MAIN	2	EACH	$	$	$	$

17	CONCRETE BOLLARD AT HYDRANT	2	EACH	$	$	$	$
18	RIGID PAVEMENT REPLACEMENT	31	SQ YD	$	$	$	$
19	LOW STRENGTH MORTAR (LSM)	35	CU YD	$	$	$	$
20	(624) MOBILIZATION	1	LUMP	$	$	$	$
21	(614) MAINTAINING TRAFFIC	1	LUMP	$	$	$	$
22	(659) SEEDING AND MULCHING	25	SQ YD	$	$	$	$
23	(SPC) CONTINGENCY/DISCRETIONARY ALLOWANCE	1	LUMP	xxxxxxxxxxxx	xxxxxxxxxxxxx	xxxxxxxxxxxx	$ 10,000.00

TOTAL $

SECTION 2
CONTRACT FORMS

NOTICE OF AWARD

To: _____ Date: _____

_____

_____

PROJECT : **TIN MAN ROAD 8" WATER MAIN EXTENSION**

You are notified that your Bid which was opened on _____ , 20____ has been accepted for items in the amount of $_____.

You are required by the Instructions to Bidders to execute the Agreement and furnish the required Bonds, Certificates of Insurance, and other documents within 10 calendar days from the date of this Notice.

Failure to comply with these conditions within the time specified will entitle Owner to consider your Bid in default, to annul this Notice and to declare your Bid Security forfeited.

The Owner will return to you one (1) fully signed set of the contract documents.

CITY OF MENTOR

_____

Kenneth J. Filipiak, City Manager

ACKNOWLEDGMENT OF AWARD

CONTRACTOR

_____

_____

Date

CONTRACT

FOR: **TIN MAN ROAD 8" WATER MAIN EXTENSION**

THIS AGREEMENT, made and entered into at _____ this _____ day of _____, 20_____, by and between the City of Mentor, OWNER, and _____ _____, (a corporation, partnership, or individual) CONTRACTOR.

WITNESSETH: That the said CONTRACTOR has agreed and by this presents does agree with the OWNER for the consideration hereinafter mentioned and contained, and under penalty expressed in a bond bearing even date with these presents, and herein contained or hereunto annexed, to furnish at his own cost and expense, all the necessary tools, materials, labor, and tests in an expeditious, substantial and workmanlike manner, the equipment and appurtenances herein contemplated, commencing work within 20 days from the date of the Notice to Proceed and executing the work within the time and in the manner specified and in conformity with the requirements set forth in this Contract.

The following documents form essential parts of the Contract:

1. Advertisement for Bids/Public Notice to Bidders
2. Instruction to Bidders
3. Bid Forms and Proposal
4. Contract Forms and Exhibits
5. Contract Bond – ORC 153.571 or ORC 153.57
6. Contract Provisions
7. General Conditions – EJCDC.1910-8
8. Supplementary Conditions
9. Specifications
10. Specific Project Requirements
11. Prevailing Wage Rate Schedule
12. Contract Drawings

The CONTRACTOR agrees and understands that the work on this contract shall be subject to the acceptance of the OWNER based upon and in accordance with the contract specifications and contract plans and drawings on file in the office of the OWNER.

The Contractor agrees that each individual employed by the Contractor or any Subcontractor engaged in work on the project under this contract shall be paid by prevailing wage established by the Department of Industrial Relations of the State of Ohio or the U.S. Department of Labor (Davis-Bacon Act) as detailed in the section titled "Wage Rates." This shall occur regardless of any contractual relationship which may be said to exist between the Contractor or any Subcontractor and such individual.

The CONTRACTOR shall proceed with the said work in a prompt and diligent manner and shall do the several parts thereof, at such times and in such order as the OWNER may direct. Further he shall complete the whole of said work in accordance with the specifications and contract drawings to the satisfaction of the OWNER on or before the time stated, and in default of completion within the time as fixed, the CONTRACTOR shall pay to the OWNER as liquidated damages, an amount equal to Five

Hundred Dollars ($500.00), for each and every day (Sundays and legal holidays excepted) the completion of the work may be delayed beyond the date fixed in the manner and as stipulated.

It is hereby mutually agreed that the OWNER is to pay and the CONTRACTOR is to receive, as full compensation for furnishing all materials and labor in building, constructing and testing and in all respect completing the herein described work and appurtenances in the manner and under the conditions herein specified, the prices stipulated in the proposal herein contained or hereto annexed and the total contract sum is $_____.

This Contract shall be in full force and effect from the date of execution by the parties.

IN WITNESS WHEREOF: The parties hereunto affixed their signatures the day and year first mentioned above.

CONTRACTOR

BY _____

OWNER

BY: _____
Kenneth J. Filipiak, City Manager

I hereby certify that the amount of funds in the sum of _____ Dollars ($_____) necessary for the foregoing Contract are appropriated and in the Treasury, or are in the process of collection, or are available through grants and/or loans from other funding sources.

BY: _____
David W. Malinowski, Director of Finance

APPROVED AS TO FORM:

BY: _____
Richard A. Hennig, Law Director

THE CONTRACTOR SHALL FURNISH THE FOLLOWING ITEMS WITHIN 10 DAYS OF NOTIFICATION OF AWARD:

A) CERTIFICATE OF INSURANCE FOR CONTRACTOR'S PUBLIC LIABILITY INSURANCE POLICY

B) CERTIFICATE OF INSURANCE FOR OWNER'S AND CONTRACTOR'S PROTECTIVE POLICY

C) CERTIFICATE OF WORKER'S COMPENSATION

D) CONTRACT BOND THAT COMPLIES WITH ORC 153.54 AND 153.57

* D above is not required if a bond complying with ORC 153.54 and 153.571 (rollover bond) was submitted at time of bid.

DELINQUENT PERSONAL PROPERTY STATEMENT

_____, having been awarded a contract by _____; hereby affirms under oath, pursuant to Ohio Revised Code Section 5719.042, that at the time the bid was submitted, my company **was / was not** charged with delinquent personal property taxes on the General Tax List of Personal Property for _____ County, Ohio.

If such charge for delinquent personal property tax exists on the General Tax List of Personal Property for _____ County, Ohio, the amount of such due and unpaid delinquent taxes, including due and unpaid penalties and interest shall be set forth below.

A copy of this statement shall be transmitted by the Taxing District's Fiscal Officer to the County Treasurer within thirty days of the date it is submitted. A copy of this statement shall also be incorporated into the Contract made between _____ and _____ and no payment shall be made with respect to any Contract unless such statement has been so incorporated as a part thereof.

Delinquent Personal Property Tax	$_____
Penalties	$_____
Interest	$_____

CONTRACTOR

_____

Subscribed in my presence, and sworn to before me, this ___ day of _____, 20_____.

_____
Notary Public

NOTICE TO PROCEED

Project: **TIN MAN ROAD 8" WATER MAIN EXTENSION**

Owner: CITY OF MENTOR

To: _____

_____

_____

Date: _____

You are hereby notified to commence work in accordance with the Contract dated _____, 20___. Substantial completion of the project shall be performed by February 28, 2017. Final restoration of the project shall be completed no later than March 15, 2017.

City of Mentor

_____

Kenneth J. Filipiak, City Manager

CONTRACTOR SHALL COMPLETE THE FOLLOWING AND RETURN WITHIN 10 DAYS OF NOTICE OF AWARD:

A) AFFIDAVIT OF COMPLIANCE WITH POLITICAL CONTRIBUTIONS LIMITATION (ORC 3517.13)

THE OWNER OR THEIR AUTHORIZED REPRESENTATIVE SHALL INSERT THE FOLLOWING CONTRACT DOCUMENTATION IN THE EXECUTED CONTRACT:

A) FINDINGS FOR RECOVERY – ORC 9.24

B) NOTIFICATION OF SURETY AND AGENT OF CONSTRUCTION CONTRACT AWARD – ORC 9.32 (if applicable)

C) NOTIFICATION TO UTILITY COMPANIES OF COMMENCEMENT OF CONTRACT EXECUTION – ORC 153.64 (if applicable)

AFFIDAVIT

OF COMPLIANCE WITH OHIO REVISED CODE SECTION 3517.13

STATE OF OHIO

COUNTY OF _____

_____ being duly sworn deposes and states as follows:

1. I am duly authorized to make the statements contained herein on behalf of _____ (the "Contracting Party").

2. The Contracting Party is a/an (select one):

   ☐ Individual, partnership, or other unincorporated business association (including without limitation, a professional association organized under Ohio Revised Code Chapter 1787), estate, or trust

   ☐ Corporation organized and existing under the laws of the State of _____

   ☐ Labor organization

3. I hereby affirm that the Contracting Party and each of the individuals specified in R.C. 3517.13(I) (with respect to non-corporate entities and labor organizations) or R.C. 3517.13(J) (with respect to corporations) are in full compliance with the political contribution limitations set forth in R.C. 3517.13(I) and (J), as applicable.

4. I understand that a false representation on this certification will incur penalties pursuant to 3517.992(R)(3).

Affiant further sayeth naught.

By:_____

Title: _____

SWORN TO BEFORE ME and subscribed in my presence this _____ day

of _____ , 20____

_____

Notary Public

My commission expires: _____

SECTION 3
GENERAL CONDITIONS

This document has important legal consequences; consultation with an attorney is encouraged with respect to its use or modification. This document should be adapted to the particular circumstances of the contemplated Project and the controlling Laws and Regulations.

STANDARD GENERAL CONDITIONS OF THE CONSTRUCTION CONTRACT

Prepared by

ENGINEERS JOINT CONTRACT DOCUMENTS COMMITTEE

and

Issued and Published Jointly by

AMERICAN COUNCIL OF ENGINEERING COMPANIES

ASSOCIATED GENERAL CONTRACTORS OF AMERICA

AMERICAN SOCIETY OF CIVIL ENGINEERS

PROFESSIONAL ENGINEERS IN PRIVATE PRACTICE
A Practice Division of the
NATIONAL SOCIETY OF PROFESSIONAL ENGINEERS

Endorsed by

CONSTRUCTION SPECIFICATIONS INSTITUTE

Copyright © 2007 National Society of Professional Engineers for EJCDC. All rights reserved.

These General Conditions have been prepared for use with the Suggested Forms of Agreement Between Owner and Contractor (EJCDC C-520 or C-525, 2007 Editions). Their provisions are interrelated and a change in one may necessitate a change in the other. Comments concerning their usage are contained in the Narrative Guide to the EJCDC Construction Documents (EJCDC C-001, 2007 Edition). For guidance in the preparation of Supplementary Conditions, see Guide to the Preparation of Supplementary Conditions (EJCDC C-800, 2007 Edition).

Copyright © 2007 National Society of Professional Engineers
1420 King Street, Alexandria, VA 22314-2794
(703) 684-2882
www.nspe.org

American Council of Engineering Companies
1015 15th Street N.W., Washington, DC 20005
(202) 347-7474
www.acec.org

American Society of Civil Engineers
1801 Alexander Bell Drive, Reston, VA 20191-4400
(800) 548-2723
www.asce.org

Associated General Contractors of America
2300 Wilson Boulevard, Suite 400, Arlington, VA 22201-3308
(703) 548-3118
www.agc.org

The copyright for this EJCDC document is owned jointly by the four
EJCDC sponsoring organizations and held in trust for their benefit by NSPE.

Copyright © 2007 National Society of Professional Engineers for EJCDC. All rights reserved.

STANDARD GENERAL CONDITIONS OF THE CONSTRUCTION CONTRACT

TABLE OF CONTENTS

Page

Article 1 – Definitions and Terminology 1
1.01 Defined Terms 1
1.02 Terminology 5

Article 2 – Preliminary Matters 6
2.01 Delivery of Bonds and Evidence of Insurance 6
2.02 Copies of Documents 6
2.03 Commencement of Contract Times; Notice to Proceed 6
2.04 Starting the Work 7
2.05 Before Starting Construction 7
2.06 Preconstruction Conference; Designation of Authorized Representatives 7
2.07 Initial Acceptance of Schedules 7

Article 3 – Contract Documents: Intent, Amending, Reuse 8
3.01 Intent 8
3.02 Reference Standards 8
3.03 Reporting and Resolving Discrepancies 9
3.04 Amending and Supplementing Contract Documents 9
3.05 Reuse of Documents 10
3.06 Electronic Data 10

Article 4 – Availability of Lands; Subsurface and Physical Conditions; Hazardous Environmental Conditions; Reference Points 11
4.01 Availability of Lands 11
4.02 Subsurface and Physical Conditions 11
4.03 Differing Subsurface or Physical Conditions 12
4.04 Underground Facilities 13
4.05 Reference Points 14
4.06 Hazardous Environmental Condition at Site 14

Article 5 – Bonds and Insurance 16
5.01 Performance, Payment, and Other Bonds 16
5.02 Licensed Sureties and Insurers 16
5.03 Certificates of Insurance 17
5.04 Contractor's Insurance 17
5.05 Owner's Liability Insurance 19
5.06 Property Insurance 19
5.07 Waiver of Rights 20
5.08 Receipt and Application of Insurance Proceeds 21

Copyright © 2007 National Society of Professional Engineers for EJCDC. All rights reserved.

5.09 Acceptance of Bonds and Insurance; Option to Replace 21
5.10 Partial Utilization, Acknowledgment of Property Insurer 22

Article 6 – Contractor's Responsibilities 22
6.01 Supervision and Superintendence 22
6.02 Labor; Working Hours 22
6.03 Services, Materials, and Equipment 22
6.04 Progress Schedule 23
6.05 Substitutes and "Or-Equals" 23
6.06 Concerning Subcontractors, Suppliers, and Others 25
6.07 Patent Fees and Royalties 27
6.08 Permits 27
6.09 Laws and Regulations 28
6.10 Taxes 28
6.11 Use of Site and Other Areas 28
6.12 Record Documents 29
6.13 Safety and Protection 29
6.14 Safety Representative 30
6.15 Hazard Communication Programs 30
6.16 Emergencies 30
6.17 Shop Drawings and Samples 31
6.18 Continuing the Work 32
6.19 Contractor's General Warranty and Guarantee 33
6.20 Indemnification 33
6.21 Delegation of Professional Design Services 34

Article 7 – Other Work at the Site 35
7.01 Related Work at Site 35
7.02 Coordination 35
7.03 Legal Relationships 36

Article 8 – Owner's Responsibilities 36
8.01 Communications to Contractor 36
8.02 Replacement of Engineer 36
8.03 Furnish Data 36
8.04 Pay When Due 36
8.05 Lands and Easements; Reports and Tests 36
8.06 Insurance 36
8.07 Change Orders 37
8.08 Inspections, Tests, and Approvals 37
8.09 Limitations on Owner's Responsibilities 37
8.10 Undisclosed Hazardous Environmental Condition 37
8.11 Evidence of Financial Arrangements 37
8.12 Compliance with Safety Program 37

Article 9 – Engineer's Status During Construction 37
9.01 Owner's Representative 37

Copyright © 2007 National Society of Professional Engineers for EJCDC. All rights reserved.

9.02 Visits to Site 37
9.03 Project Representative 38
9.04 Authorized Variations in Work 38
9.05 Rejecting Defective Work 38
9.06 Shop Drawings, Change Orders and Payments 39
9.07 Determinations for Unit Price Work 39
9.08 Decisions on Requirements of Contract Documents and Acceptability of Work 39
9.09 Limitations on Engineer's Authority and Responsibilities 39
9.10 Compliance with Safety Program 40

Article 10 – Changes in the Work; Claims 40
10.01 Authorized Changes in the Work 40
10.02 Unauthorized Changes in the Work 41
10.03 Execution of Change Orders 41
10.04 Notification to Surety 41
10.05 Claims 41

Article 11 – Cost of the Work; Allowances; Unit Price Work 42
11.01 Cost of the Work 42
11.02 Allowances 45
11.03 Unit Price Work 45

Article 12 – Change of Contract Price; Change of Contract Times 46
12.01 Change of Contract Price 46
12.02 Change of Contract Times 47
12.03 Delays 47

Article 13 – Tests and Inspections; Correction, Removal or Acceptance of Defective Work 48
13.01 Notice of Defects 48
13.02 Access to Work 48
13.03 Tests and Inspections 49
13.04 Uncovering Work 49
13.05 Owner May Stop the Work 50
13.06 Correction or Removal of Defective Work 50
13.07 Correction Period 50
13.08 Acceptance of Defective Work 51
13.09 Owner May Correct Defective Work 52

Article 14 – Payments to Contractor and Completion 52
14.01 Schedule of Values 52
14.02 Progress Payments 52
14.03 Contractor's Warranty of Title 55
14.04 Substantial Completion 55
14.05 Partial Utilization 56
14.06 Final Inspection 57
14.07 Final Payment 57
14.08 Final Completion Delayed 58

Copyright © 2007 National Society of Professional Engineers for EJCDC. All rights reserved.

14.09 Waiver of Claims 58

Article 15 – Suspension of Work and Termination 59
15.01 Owner May Suspend Work 59
15.02 Owner May Terminate for Cause 59
15.03 Owner May Terminate For Convenience 60
15.04 Contractor May Stop Work or Terminate 60

Article 16 – Dispute Resolution 61
16.01 Methods and Procedures 61

Article 17 – Miscellaneous 61
17.01 Giving Notice 61
17.02 Computation of Times 62
17.03 Cumulative Remedies 62
17.04 Survival of Obligations 62
17.05 Controlling Law 62
17.06 Headings 62

Copyright © 2007 National Society of Professional Engineers for EJCDC. All rights reserved.

ARTICLE 1 – DEFINITIONS AND TERMINOLOGY

1.01 *Defined Terms*

A. Wherever used in the Bidding Requirements or Contract Documents and printed with initial capital letters, the terms listed below will have the meanings indicated which are applicable to both the singular and plural thereof. In addition to terms specifically defined, terms with initial capital letters in the Contract Documents include references to identified articles and paragraphs, and the titles of other documents or forms.

1. *Addenda*—Written or graphic instruments issued prior to the opening of Bids which clarify, correct, or change the Bidding Requirements or the proposed Contract Documents.

2. *Agreement*—The written instrument which is evidence of the agreement between Owner and Contractor covering the Work.

3. *Application for Payment*—The form acceptable to Engineer which is to be used by Contractor during the course of the Work in requesting progress or final payments and which is to be accompanied by such supporting documentation as is required by the Contract Documents.

4. *Asbestos*—Any material that contains more than one percent asbestos and is friable or is releasing asbestos fibers into the air above current action levels established by the United States Occupational Safety and Health Administration.

5. *Bid*—The offer or proposal of a Bidder submitted on the prescribed form setting forth the prices for the Work to be performed.

6. *Bidder*—The individual or entity who submits a Bid directly to Owner.

7. *Bidding Documents*—The Bidding Requirements and the proposed Contract Documents (including all Addenda).

8. *Bidding Requirements*—The advertisement or invitation to bid, Instructions to Bidders, Bid security of acceptable form, if any, and the Bid Form with any supplements.

9. *Change Order*—A document recommended by Engineer which is signed by Contractor and Owner and authorizes an addition, deletion, or revision in the Work or an adjustment in the Contract Price or the Contract Times, issued on or after the Effective Date of the Agreement.

10. *Claim*—A demand or assertion by Owner or Contractor seeking an adjustment of Contract Price or Contract Times, or both, or other relief with respect to the terms of the Contract. A demand for money or services by a third party is not a Claim.

11. *Contract*—The entire and integrated written agreement between the Owner and Contractor concerning the Work. The Contract supersedes prior negotiations, representations, or agreements, whether written or oral.

Copyright © 2007 National Society of Professional Engineers for EJCDC. All rights reserved.

12. *Contract Documents*—Those items so designated in the Agreement. Only printed or hard copies of the items listed in the Agreement are Contract Documents. Approved Shop Drawings, other Contractor submittals, and the reports and drawings of subsurface and physical conditions are not Contract Documents.

13. *Contract Price*—The moneys payable by Owner to Contractor for completion of the Work in accordance with the Contract Documents as stated in the Agreement (subject to the provisions of Paragraph 11.03 in the case of Unit Price Work).

14. *Contract Times*—The number of days or the dates stated in the Agreement to: (i) achieve Milestones, if any; (ii) achieve Substantial Completion; and (iii) complete the Work so that it is ready for final payment as evidenced by Engineer's written recommendation of final payment.

15. *Contractor*—The individual or entity with whom Owner has entered into the Agreement.

16. *Cost of the Work*—See Paragraph 11.01 for definition.

17. *Drawings*—That part of the Contract Documents prepared or approved by Engineer which graphically shows the scope, extent, and character of the Work to be performed by Contractor. Shop Drawings and other Contractor submittals are not Drawings as so defined.

18. *Effective Date of the Agreement*—The date indicated in the Agreement on which it becomes effective, but if no such date is indicated, it means the date on which the Agreement is signed and delivered by the last of the two parties to sign and deliver.

19. *Engineer*—The individual or entity named as such in the Agreement.

20. *Field Order*—A written order issued by Engineer which requires minor changes in the Work but which does not involve a change in the Contract Price or the Contract Times.

21. *General Requirements*—Sections of Division 1 of the Specifications.

22. *Hazardous Environmental Condition*—The presence at the Site of Asbestos, PCBs, Petroleum, Hazardous Waste, or Radioactive Material in such quantities or circumstances that may present a substantial danger to persons or property exposed thereto.

23. *Hazardous Waste*—The term Hazardous Waste shall have the meaning provided in Section 1004 of the Solid Waste Disposal Act (42 USC Section 6903) as amended from time to time.

24. *Laws and Regulations; Laws or Regulations*—Any and all applicable laws, rules, regulations, ordinances, codes, and orders of any and all governmental bodies, agencies, authorities, and courts having jurisdiction.

25. *Liens*—Charges, security interests, or encumbrances upon Project funds, real property, or personal property.

26. *Milestone*—A principal event specified in the Contract Documents relating to an intermediate completion date or time prior to Substantial Completion of all the Work.

Copyright © 2007 National Society of Professional Engineers for EJCDC. All rights reserved.

27. *Notice of Award*—The written notice by Owner to the Successful Bidder stating that upon timely compliance by the Successful Bidder with the conditions precedent listed therein, Owner will sign and deliver the Agreement.

28. *Notice to Proceed*—A written notice given by Owner to Contractor fixing the date on which the Contract Times will commence to run and on which Contractor shall start to perform the Work under the Contract Documents.

29. *Owner*—The individual or entity with whom Contractor has entered into the Agreement and for whom the Work is to be performed.

30. *PCBs*—Polychlorinated biphenyls.

31. *Petroleum*—Petroleum, including crude oil or any fraction thereof which is liquid at standard conditions of temperature and pressure (60 degrees Fahrenheit and 14.7 pounds per square inch absolute), such as oil, petroleum, fuel oil, oil sludge, oil refuse, gasoline, kerosene, and oil mixed with other non-Hazardous Waste and crude oils.

32. *Progress Schedule*—A schedule, prepared and maintained by Contractor, describing the sequence and duration of the activities comprising the Contractor's plan to accomplish the Work within the Contract Times.

33. *Project*—The total construction of which the Work to be performed under the Contract Documents may be the whole, or a part.

34. *Project Manual*—The bound documentary information prepared for bidding and constructing the Work. A listing of the contents of the Project Manual, which may be bound in one or more volumes, is contained in the table(s) of contents.

35. *Radioactive Material*—Source, special nuclear, or byproduct material as defined by the Atomic Energy Act of 1954 (42 USC Section 2011 et seq.) as amended from time to time.

36. *Resident Project Representative*—The authorized representative of Engineer who may be assigned to the Site or any part thereof.

37. *Samples*—Physical examples of materials, equipment, or workmanship that are representative of some portion of the Work and which establish the standards by which such portion of the Work will be judged.

38. *Schedule of Submittals*—A schedule, prepared and maintained by Contractor, of required submittals and the time requirements to support scheduled performance of related construction activities.

39. *Schedule of Values*—A schedule, prepared and maintained by Contractor, allocating portions of the Contract Price to various portions of the Work and used as the basis for reviewing Contractor's Applications for Payment.

Copyright © 2007 National Society of Professional Engineers for EJCDC. All rights reserved.

40. *Shop Drawings*—All drawings, diagrams, illustrations, schedules, and other data or information which are specifically prepared or assembled by or for Contractor and submitted by Contractor to illustrate some portion of the Work.

41. *Site*—Lands or areas indicated in the Contract Documents as being furnished by Owner upon which the Work is to be performed, including rights-of-way and easements for access thereto, and such other lands furnished by Owner which are designated for the use of Contractor.

42. *Specifications*—That part of the Contract Documents consisting of written requirements for materials, equipment, systems, standards and workmanship as applied to the Work, and certain administrative requirements and procedural matters applicable thereto.

43. *Subcontractor*—An individual or entity having a direct contract with Contractor or with any other Subcontractor for the performance of a part of the Work at the Site.

44. *Substantial Completion*—The time at which the Work (or a specified part thereof) has progressed to the point where, in the opinion of Engineer, the Work (or a specified part thereof) is sufficiently complete, in accordance with the Contract Documents, so that the Work (or a specified part thereof) can be utilized for the purposes for which it is intended. The terms "substantially complete" and "substantially completed" as applied to all or part of the Work refer to Substantial Completion thereof.

45. *Successful Bidder*—The Bidder submitting a responsive Bid to whom Owner makes an award.

46. *Supplementary Conditions*—That part of the Contract Documents which amends or supplements these General Conditions.

47. *Supplier*—A manufacturer, fabricator, supplier, distributor, materialman, or vendor having a direct contract with Contractor or with any Subcontractor to furnish materials or equipment to be incorporated in the Work by Contractor or Subcontractor.

48. *Underground Facilities*—All underground pipelines, conduits, ducts, cables, wires, manholes, vaults, tanks, tunnels, or other such facilities or attachments, and any encasements containing such facilities, including those that convey electricity, gases, steam, liquid petroleum products, telephone or other communications, cable television, water, wastewater, storm water, other liquids or chemicals, or traffic or other control systems.

49. *Unit Price Work*—Work to be paid for on the basis of unit prices.

50. *Work*—The entire construction or the various separately identifiable parts thereof required to be provided under the Contract Documents. Work includes and is the result of performing or providing all labor, services, and documentation necessary to produce such construction, and furnishing, installing, and incorporating all materials and equipment into such construction, all as required by the Contract Documents.

51. *Work Change Directive*—A written statement to Contractor issued on or after the Effective Date of the Agreement and signed by Owner and recommended by Engineer ordering an

Copyright © 2007 National Society of Professional Engineers for EJCDC. All rights reserved.

addition, deletion, or revision in the Work, or responding to differing or unforeseen subsurface or physical conditions under which the Work is to be performed or to emergencies. A Work Change Directive will not change the Contract Price or the Contract Times but is evidence that the parties expect that the change ordered or documented by a Work Change Directive will be incorporated in a subsequently issued Change Order following negotiations by the parties as to its effect, if any, on the Contract Price or Contract Times.

1.02 *Terminology*

A. The words and terms discussed in Paragraph 1.02.B through F are not defined but, when used in the Bidding Requirements or Contract Documents, have the indicated meaning.

B. *Intent of Certain Terms or Adjectives:*

1. The Contract Documents include the terms "as allowed," "as approved," "as ordered," "as directed" or terms of like effect or import to authorize an exercise of professional judgment by Engineer. In addition, the adjectives "reasonable," "suitable," "acceptable," "proper," "satisfactory," or adjectives of like effect or import are used to describe an action or determination of Engineer as to the Work. It is intended that such exercise of professional judgment, action, or determination will be solely to evaluate, in general, the Work for compliance with the information in the Contract Documents and with the design concept of the Project as a functioning whole as shown or indicated in the Contract Documents (unless there is a specific statement indicating otherwise). The use of any such term or adjective is not intended to and shall not be effective to assign to Engineer any duty or authority to supervise or direct the performance of the Work, or any duty or authority to undertake responsibility contrary to the provisions of Paragraph 9.09 or any other provision of the Contract Documents.

C. *Day:*

1. The word "day" means a calendar day of 24 hours measured from midnight to the next midnight.

D. *Defective:*

1. The word "defective," when modifying the word "Work," refers to Work that is unsatisfactory, faulty, or deficient in that it:

a. does not conform to the Contract Documents; or

b. does not meet the requirements of any applicable inspection, reference standard, test, or approval referred to in the Contract Documents; or

c. has been damaged prior to Engineer's recommendation of final payment (unless responsibility for the protection thereof has been assumed by Owner at Substantial Completion in accordance with Paragraph 14.04 or 14.05).

Copyright © 2007 National Society of Professional Engineers for EJCDC. All rights reserved.

E. *Furnish, Install, Perform, Provide:*

1. The word "furnish," when used in connection with services, materials, or equipment, shall mean to supply and deliver said services, materials, or equipment to the Site (or some other specified location) ready for use or installation and in usable or operable condition.

2. The word "install," when used in connection with services, materials, or equipment, shall mean to put into use or place in final position said services, materials, or equipment complete and ready for intended use.

3. The words "perform" or "provide," when used in connection with services, materials, or equipment, shall mean to furnish and install said services, materials, or equipment complete and ready for intended use.

4. When "furnish," "install," "perform," or "provide" is not used in connection with services, materials, or equipment in a context clearly requiring an obligation of Contractor, "provide" is implied.

F. Unless stated otherwise in the Contract Documents, words or phrases that have a well-known technical or construction industry or trade meaning are used in the Contract Documents in accordance with such recognized meaning.

ARTICLE 2 – PRELIMINARY MATTERS

2.01 *Delivery of Bonds and Evidence of Insurance*

A. When Contractor delivers the executed counterparts of the Agreement to Owner, Contractor shall also deliver to Owner such bonds as Contractor may be required to furnish.

B. *Evidence of Insurance:* Before any Work at the Site is started, Contractor and Owner shall each deliver to the other, with copies to each additional insured identified in the Supplementary Conditions, certificates of insurance (and other evidence of insurance which either of them or any additional insured may reasonably request) which Contractor and Owner respectively are required to purchase and maintain in accordance with Article 5.

2.02 *Copies of Documents*

A. Owner shall furnish to Contractor up to ten printed or hard copies of the Drawings and Project Manual. Additional copies will be furnished upon request at the cost of reproduction.

2.03 *Commencement of Contract Times; Notice to Proceed*

A. The Contract Times will commence to run on the thirtieth day after the Effective Date of the Agreement or, if a Notice to Proceed is given, on the day indicated in the Notice to Proceed. A Notice to Proceed may be given at any time within 30 days after the Effective Date of the Agreement. In no event will the Contract Times commence to run later than the sixtieth day after the day of Bid opening or the thirtieth day after the Effective Date of the Agreement, whichever date is earlier.

Copyright © 2007 National Society of Professional Engineers for EJCDC. All rights reserved.

2.04 *Starting the Work*

A. Contractor shall start to perform the Work on the date when the Contract Times commence to run. No Work shall be done at the Site prior to the date on which the Contract Times commence to run.

2.05 *Before Starting Construction*

A. *Preliminary Schedules:* Within 10 days after the Effective Date of the Agreement (unless otherwise specified in the General Requirements), Contractor shall submit to Engineer for timely review:

1. a preliminary Progress Schedule indicating the times (numbers of days or dates) for starting and completing the various stages of the Work, including any Milestones specified in the Contract Documents;

2. a preliminary Schedule of Submittals; and

3. a preliminary Schedule of Values for all of the Work which includes quantities and prices of items which when added together equal the Contract Price and subdivides the Work into component parts in sufficient detail to serve as the basis for progress payments during performance of the Work. Such prices will include an appropriate amount of overhead and profit applicable to each item of Work.

2.06 *Preconstruction Conference; Designation of Authorized Representatives*

A. Before any Work at the Site is started, a conference attended by Owner, Contractor, Engineer, and others as appropriate will be held to establish a working understanding among the parties as to the Work and to discuss the schedules referred to in Paragraph 2.05.A, procedures for handling Shop Drawings and other submittals, processing Applications for Payment, and maintaining required records.

B. At this conference Owner and Contractor each shall designate, in writing, a specific individual to act as its authorized representative with respect to the services and responsibilities under the Contract. Such individuals shall have the authority to transmit instructions, receive information, render decisions relative to the Contract, and otherwise act on behalf of each respective party.

2.07 *Initial Acceptance of Schedules*

A. At least 10 days before submission of the first Application for Payment a conference attended by Contractor, Engineer, and others as appropriate will be held to review for acceptability to Engineer as provided below the schedules submitted in accordance with Paragraph 2.05.A. Contractor shall have an additional 10 days to make corrections and adjustments and to complete and resubmit the schedules. No progress payment shall be made to Contractor until acceptable schedules are submitted to Engineer.

1. The Progress Schedule will be acceptable to Engineer if it provides an orderly progression of the Work to completion within the Contract Times. Such acceptance will not impose on

Copyright © 2007 National Society of Professional Engineers for EJCDC. All rights reserved.

Engineer responsibility for the Progress Schedule, for sequencing, scheduling, or progress of the Work, nor interfere with or relieve Contractor from Contractor's full responsibility therefor.

2. Contractor's Schedule of Submittals will be acceptable to Engineer if it provides a workable arrangement for reviewing and processing the required submittals.

3. Contractor's Schedule of Values will be acceptable to Engineer as to form and substance if it provides a reasonable allocation of the Contract Price to component parts of the Work.

ARTICLE 3 – CONTRACT DOCUMENTS: INTENT, AMENDING, REUSE

3.01 *Intent*

A. The Contract Documents are complementary; what is required by one is as binding as if required by all.

B. It is the intent of the Contract Documents to describe a functionally complete project (or part thereof) to be constructed in accordance with the Contract Documents. Any labor, documentation, services, materials, or equipment that reasonably may be inferred from the Contract Documents or from prevailing custom or trade usage as being required to produce the indicated result will be provided whether or not specifically called for, at no additional cost to Owner.

C. Clarifications and interpretations of the Contract Documents shall be issued by Engineer as provided in Article 9.

3.02 *Reference Standards*

A. Standards, Specifications, Codes, Laws, and Regulations

1. Reference to standards, specifications, manuals, or codes of any technical society, organization, or association, or to Laws or Regulations, whether such reference be specific or by implication, shall mean the standard, specification, manual, code, or Laws or Regulations in effect at the time of opening of Bids (or on the Effective Date of the Agreement if there were no Bids), except as may be otherwise specifically stated in the Contract Documents.

2. No provision of any such standard, specification, manual, or code, or any instruction of a Supplier, shall be effective to change the duties or responsibilities of Owner, Contractor, or Engineer, or any of their subcontractors, consultants, agents, or employees, from those set forth in the Contract Documents. No such provision or instruction shall be effective to assign to Owner, Engineer, or any of their officers, directors, members, partners, employees, agents, consultants, or subcontractors, any duty or authority to supervise or direct the performance of the Work or any duty or authority to undertake responsibility inconsistent with the provisions of the Contract Documents.

Copyright © 2007 National Society of Professional Engineers for EJCDC. All rights reserved.

3.03 *Reporting and Resolving Discrepancies*

A. *Reporting Discrepancies:*

1. *Contractor's Review of Contract Documents Before Starting Work*: Before undertaking each part of the Work, Contractor shall carefully study and compare the Contract Documents and check and verify pertinent figures therein and all applicable field measurements. Contractor shall promptly report in writing to Engineer any conflict, error, ambiguity, or discrepancy which Contractor discovers, or has actual knowledge of, and shall obtain a written interpretation or clarification from Engineer before proceeding with any Work affected thereby.

2. *Contractor's Review of Contract Documents During Performance of Work*: If, during the performance of the Work, Contractor discovers any conflict, error, ambiguity, or discrepancy within the Contract Documents, or between the Contract Documents and (a) any applicable Law or Regulation , (b) any standard, specification, manual, or code, or (c) any instruction of any Supplier, then Contractor shall promptly report it to Engineer in writing. Contractor shall not proceed with the Work affected thereby (except in an emergency as required by Paragraph 6.16.A) until an amendment or supplement to the Contract Documents has been issued by one of the methods indicated in Paragraph 3.04.

3. Contractor shall not be liable to Owner or Engineer for failure to report any conflict, error, ambiguity, or discrepancy in the Contract Documents unless Contractor had actual knowledge thereof.

B. *Resolving Discrepancies:*

1. Except as may be otherwise specifically stated in the Contract Documents, the provisions of the Contract Documents shall take precedence in resolving any conflict, error, ambiguity, or discrepancy between the provisions of the Contract Documents and:

   a. the provisions of any standard, specification, manual, or code, or the instruction of any Supplier (whether or not specifically incorporated by reference in the Contract Documents); or

   b. the provisions of any Laws or Regulations applicable to the performance of the Work (unless such an interpretation of the provisions of the Contract Documents would result in violation of such Law or Regulation).

3.04 *Amending and Supplementing Contract Documents*

A. The Contract Documents may be amended to provide for additions, deletions, and revisions in the Work or to modify the terms and conditions thereof by either a Change Order or a Work Change Directive.

B. The requirements of the Contract Documents may be supplemented, and minor variations and deviations in the Work may be authorized, by one or more of the following ways:

Copyright © 2007 National Society of Professional Engineers for EJCDC. All rights reserved.

1. A Field Order;

2. Engineer's approval of a Shop Drawing or Sample (subject to the provisions of Paragraph 6.17.D.3); or

3. Engineer's written interpretation or clarification.

3.05 *Reuse of Documents*

A. Contractor and any Subcontractor or Supplier shall not:

1. have or acquire any title to or ownership rights in any of the Drawings, Specifications, or other documents (or copies of any thereof) prepared by or bearing the seal of Engineer or its consultants, including electronic media editions; or

2. reuse any such Drawings, Specifications, other documents, or copies thereof on extensions of the Project or any other project without written consent of Owner and Engineer and specific written verification or adaptation by Engineer.

B. The prohibitions of this Paragraph 3.05 will survive final payment, or termination of the Contract. Nothing herein shall preclude Contractor from retaining copies of the Contract Documents for record purposes.

3.06 *Electronic Data*

A. Unless otherwise stated in the Supplementary Conditions, the data furnished by Owner or Engineer to Contractor, or by Contractor to Owner or Engineer, that may be relied upon are limited to the printed copies (also known as hard copies). Files in electronic media format of text, data, graphics, or other types are furnished only for the convenience of the receiving party. Any conclusion or information obtained or derived from such electronic files will be at the user's sole risk. If there is a discrepancy between the electronic files and the hard copies, the hard copies govern.

B. Because data stored in electronic media format can deteriorate or be modified inadvertently or otherwise without authorization of the data's creator, the party receiving electronic files agrees that it will perform acceptance tests or procedures within 60 days, after which the receiving party shall be deemed to have accepted the data thus transferred. Any errors detected within the 60-day acceptance period will be corrected by the transferring party.

C. When transferring documents in electronic media format, the transferring party makes no representations as to long term compatibility, usability, or readability of documents resulting from the use of software application packages, operating systems, or computer hardware differing from those used by the data's creator.

Copyright © 2007 National Society of Professional Engineers for EJCDC. All rights reserved.

ARTICLE 4 – AVAILABILITY OF LANDS; SUBSURFACE AND PHYSICAL CONDITIONS; HAZARDOUS ENVIRONMENTAL CONDITIONS; REFERENCE POINTS

4.01 *Availability of Lands*

A. Owner shall furnish the Site. Owner shall notify Contractor of any encumbrances or restrictions not of general application but specifically related to use of the Site with which Contractor must comply in performing the Work. Owner will obtain in a timely manner and pay for easements for permanent structures or permanent changes in existing facilities. If Contractor and Owner are unable to agree on entitlement to or on the amount or extent, if any, of any adjustment in the Contract Price or Contract Times, or both, as a result of any delay in Owner's furnishing the Site or a part thereof, Contractor may make a Claim therefor as provided in Paragraph 10.05.

B. Upon reasonable written request, Owner shall furnish Contractor with a current statement of record legal title and legal description of the lands upon which the Work is to be performed and Owner's interest therein as necessary for giving notice of or filing a mechanic's or construction lien against such lands in accordance with applicable Laws and Regulations.

C. Contractor shall provide for all additional lands and access thereto that may be required for temporary construction facilities or storage of materials and equipment.

4.02 *Subsurface and Physical Conditions*

A. *Reports and Drawings:* The Supplementary Conditions identify:

1. those reports known to Owner of explorations and tests of subsurface conditions at or contiguous to the Site; and

2. those drawings known to Owner of physical conditions relating to existing surface or subsurface structures at the Site (except Underground Facilities).

B. *Limited Reliance by Contractor on Technical Data Authorized:* Contractor may rely upon the accuracy of the "technical data" contained in such reports and drawings, but such reports and drawings are not Contract Documents. Such "technical data" is identified in the Supplementary Conditions. Except for such reliance on such "technical data," Contractor may not rely upon or make any claim against Owner or Engineer, or any of their officers, directors, members, partners, employees, agents, consultants, or subcontractors with respect to:

1. the completeness of such reports and drawings for Contractor's purposes, including, but not limited to, any aspects of the means, methods, techniques, sequences, and procedures of construction to be employed by Contractor, and safety precautions and programs incident thereto; or

2. other data, interpretations, opinions, and information contained in such reports or shown or indicated in such drawings; or

3. any Contractor interpretation of or conclusion drawn from any "technical data" or any such other data, interpretations, opinions, or information.

Copyright © 2007 National Society of Professional Engineers for EJCDC. All rights reserved.

4.03 *Differing Subsurface or Physical Conditions*

A. *Notice:* If Contractor believes that any subsurface or physical condition that is uncovered or revealed either:

1. is of such a nature as to establish that any "technical data" on which Contractor is entitled to rely as provided in Paragraph 4.02 is materially inaccurate; or

2. is of such a nature as to require a change in the Contract Documents; or

3. differs materially from that shown or indicated in the Contract Documents; or

4. is of an unusual nature, and differs materially from conditions ordinarily encountered and generally recognized as inherent in work of the character provided for in the Contract Documents;

then Contractor shall, promptly after becoming aware thereof and before further disturbing the subsurface or physical conditions or performing any Work in connection therewith (except in an emergency as required by Paragraph 6.16.A), notify Owner and Engineer in writing about such condition. Contractor shall not further disturb such condition or perform any Work in connection therewith (except as aforesaid) until receipt of written order to do so.

B. *Engineer's Review*: After receipt of written notice as required by Paragraph 4.03.A, Engineer will promptly review the pertinent condition, determine the necessity of Owner's obtaining additional exploration or tests with respect thereto, and advise Owner in writing (with a copy to Contractor) of Engineer's findings and conclusions.

C. *Possible Price and Times Adjustments:*

1. The Contract Price or the Contract Times, or both, will be equitably adjusted to the extent that the existence of such differing subsurface or physical condition causes an increase or decrease in Contractor's cost of, or time required for, performance of the Work; subject, however, to the following:

   a. such condition must meet any one or more of the categories described in Paragraph 4.03.A; and

   b. with respect to Work that is paid for on a unit price basis, any adjustment in Contract Price will be subject to the provisions of Paragraphs 9.07 and 11.03.

2. Contractor shall not be entitled to any adjustment in the Contract Price or Contract Times if:

   a. Contractor knew of the existence of such conditions at the time Contractor made a final commitment to Owner with respect to Contract Price and Contract Times by the submission of a Bid or becoming bound under a negotiated contract; or

   b. the existence of such condition could reasonably have been discovered or revealed as a result of any examination, investigation, exploration, test, or study of the Site and

Copyright © 2007 National Society of Professional Engineers for EJCDC. All rights reserved.

contiguous areas required by the Bidding Requirements or Contract Documents to be conducted by or for Contractor prior to Contractor's making such final commitment; or

c. Contractor failed to give the written notice as required by Paragraph 4.03.A.

3. If Owner and Contractor are unable to agree on entitlement to or on the amount or extent, if any, of any adjustment in the Contract Price or Contract Times, or both, a Claim may be made therefor as provided in Paragraph 10.05. However, neither Owner or Engineer, or any of their officers, directors, members, partners, employees, agents, consultants, or subcontractors shall be liable to Contractor for any claims, costs, losses, or damages (including but not limited to all fees and charges of engineers, architects, attorneys, and other professionals and all court or arbitration or other dispute resolution costs) sustained by Contractor on or in connection with any other project or anticipated project.

4.04 *Underground Facilities*

A. *Shown or Indicated:* The information and data shown or indicated in the Contract Documents with respect to existing Underground Facilities at or contiguous to the Site is based on information and data furnished to Owner or Engineer by the owners of such Underground Facilities, including Owner, or by others. Unless it is otherwise expressly provided in the Supplementary Conditions:

1. Owner and Engineer shall not be responsible for the accuracy or completeness of any such information or data provided by others; and

2. the cost of all of the following will be included in the Contract Price, and Contractor shall have full responsibility for:

a. reviewing and checking all such information and data;

b. locating all Underground Facilities shown or indicated in the Contract Documents;

c. coordination of the Work with the owners of such Underground Facilities, including Owner, during construction; and

d. the safety and protection of all such Underground Facilities and repairing any damage thereto resulting from the Work.

B. *Not Shown or Indicated:*

1. If an Underground Facility is uncovered or revealed at or contiguous to the Site which was not shown or indicated, or not shown or indicated with reasonable accuracy in the Contract Documents, Contractor shall, promptly after becoming aware thereof and before further disturbing conditions affected thereby or performing any Work in connection therewith (except in an emergency as required by Paragraph 6.16.A), identify the owner of such Underground Facility and give written notice to that owner and to Owner and Engineer. Engineer will promptly review the Underground Facility and determine the extent, if any, to which a change is required in the Contract Documents to reflect and document the

Copyright © 2007 National Society of Professional Engineers for EJCDC. All rights reserved.

consequences of the existence or location of the Underground Facility. During such time, Contractor shall be responsible for the safety and protection of such Underground Facility.

2. If Engineer concludes that a change in the Contract Documents is required, a Work Change Directive or a Change Order will be issued to reflect and document such consequences. An equitable adjustment shall be made in the Contract Price or Contract Times, or both, to the extent that they are attributable to the existence or location of any Underground Facility that was not shown or indicated or not shown or indicated with reasonable accuracy in the Contract Documents and that Contractor did not know of and could not reasonably have been expected to be aware of or to have anticipated. If Owner and Contractor are unable to agree on entitlement to or on the amount or extent, if any, of any such adjustment in Contract Price or Contract Times, Owner or Contractor may make a Claim therefor as provided in Paragraph 10.05.

4.05 *Reference Points*

A. Owner shall provide engineering surveys to establish reference points for construction which in Engineer's judgment are necessary to enable Contractor to proceed with the Work. Contractor shall be responsible for laying out the Work, shall protect and preserve the established reference points and property monuments, and shall make no changes or relocations without the prior written approval of Owner. Contractor shall report to Engineer whenever any reference point or property monument is lost or destroyed or requires relocation because of necessary changes in grades or locations, and shall be responsible for the accurate replacement or relocation of such reference points or property monuments by professionally qualified personnel.

4.06 *Hazardous Environmental Condition at Site*

A. *Reports and Drawings:* The Supplementary Conditions identify those reports and drawings known to Owner relating to Hazardous Environmental Conditions that have been identified at the Site.

B. *Limited Reliance by Contractor on Technical Data Authorized:* Contractor may rely upon the accuracy of the "technical data" contained in such reports and drawings, but such reports and drawings are not Contract Documents. Such "technical data" is identified in the Supplementary Conditions. Except for such reliance on such "technical data," Contractor may not rely upon or make any claim against Owner or Engineer, or any of their officers, directors, members, partners, employees, agents, consultants, or subcontractors with respect to:

1. the completeness of such reports and drawings for Contractor's purposes, including, but not limited to, any aspects of the means, methods, techniques, sequences and procedures of construction to be employed by Contractor and safety precautions and programs incident thereto; or

2. other data, interpretations, opinions and information contained in such reports or shown or indicated in such drawings; or

3. any Contractor interpretation of or conclusion drawn from any "technical data" or any such other data, interpretations, opinions or information.

Copyright © 2007 National Society of Professional Engineers for EJCDC. All rights reserved.

C. Contractor shall not be responsible for any Hazardous Environmental Condition uncovered or revealed at the Site which was not shown or indicated in Drawings or Specifications or identified in the Contract Documents to be within the scope of the Work. Contractor shall be responsible for a Hazardous Environmental Condition created with any materials brought to the Site by Contractor, Subcontractors, Suppliers, or anyone else for whom Contractor is responsible.

D. If Contractor encounters a Hazardous Environmental Condition or if Contractor or anyone for whom Contractor is responsible creates a Hazardous Environmental Condition, Contractor shall immediately: (i) secure or otherwise isolate such condition; (ii) stop all Work in connection with such condition and in any area affected thereby (except in an emergency as required by Paragraph 6.16.A); and (iii) notify Owner and Engineer (and promptly thereafter confirm such notice in writing). Owner shall promptly consult with Engineer concerning the necessity for Owner to retain a qualified expert to evaluate such condition or take corrective action, if any. Promptly after consulting with Engineer, Owner shall take such actions as are necessary to permit Owner to timely obtain required permits and provide Contractor the written notice required by Paragraph 4.06.E.

E. Contractor shall not be required to resume Work in connection with such condition or in any affected area until after Owner has obtained any required permits related thereto and delivered written notice to Contractor: (i) specifying that such condition and any affected area is or has been rendered safe for the resumption of Work; or (ii) specifying any special conditions under which such Work may be resumed safely. If Owner and Contractor cannot agree as to entitlement to or on the amount or extent, if any, of any adjustment in Contract Price or Contract Times, or both, as a result of such Work stoppage or such special conditions under which Work is agreed to be resumed by Contractor, either party may make a Claim therefor as provided in Paragraph 10.05.

F. If after receipt of such written notice Contractor does not agree to resume such Work based on a reasonable belief it is unsafe, or does not agree to resume such Work under such special conditions, then Owner may order the portion of the Work that is in the area affected by such condition to be deleted from the Work. If Owner and Contractor cannot agree as to entitlement to or on the amount or extent, if any, of an adjustment in Contract Price or Contract Times as a result of deleting such portion of the Work, then either party may make a Claim therefor as provided in Paragraph 10.05. Owner may have such deleted portion of the Work performed by Owner's own forces or others in accordance with Article 7.

G. To the fullest extent permitted by Laws and Regulations, Owner shall indemnify and hold harmless Contractor, Subcontractors, and Engineer, and the officers, directors, members, partners, employees, agents, consultants, and subcontractors of each and any of them from and against all claims, costs, losses, and damages (including but not limited to all fees and charges of engineers, architects, attorneys, and other professionals and all court or arbitration or other dispute resolution costs) arising out of or relating to a Hazardous Environmental Condition, provided that such Hazardous Environmental Condition: (i) was not shown or indicated in the Drawings or Specifications or identified in the Contract Documents to be included within the scope of the Work, and (ii) was not created by Contractor or by anyone for whom Contractor is responsible. Nothing in this Paragraph 4.06.G shall obligate Owner to indemnify any individual or entity from and against the consequences of that individual's or entity's own negligence.

Copyright © 2007 National Society of Professional Engineers for EJCDC. All rights reserved.

H. To the fullest extent permitted by Laws and Regulations, Contractor shall indemnify and hold harmless Owner and Engineer, and the officers, directors, members, partners, employees, agents, consultants, and subcontractors of each and any of them from and against all claims, costs, losses, and damages (including but not limited to all fees and charges of engineers, architects, attorneys, and other professionals and all court or arbitration or other dispute resolution costs) arising out of or relating to a Hazardous Environmental Condition created by Contractor or by anyone for whom Contractor is responsible. Nothing in this Paragraph 4.06.H shall obligate Contractor to indemnify any individual or entity from and against the consequences of that individual's or entity's own negligence.

I. The provisions of Paragraphs 4.02, 4.03, and 4.04 do not apply to a Hazardous Environmental Condition uncovered or revealed at the Site.

ARTICLE 5 – BONDS AND INSURANCE

5.01 *Performance, Payment, and Other Bonds*

A. Contractor shall furnish performance and payment bonds, each in an amount at least equal to the Contract Price as security for the faithful performance and payment of all of Contractor's obligations under the Contract Documents. These bonds shall remain in effect until one year after the date when final payment becomes due or until completion of the correction period specified in Paragraph 13.07, whichever is later, except as provided otherwise by Laws or Regulations or by the Contract Documents. Contractor shall also furnish such other bonds as are required by the Contract Documents.

B. All bonds shall be in the form prescribed by the Contract Documents except as provided otherwise by Laws or Regulations, and shall be executed by such sureties as are named in the list of "Companies Holding Certificates of Authority as Acceptable Sureties on Federal Bonds and as Acceptable Reinsuring Companies" as published in Circular 570 (amended) by the Financial Management Service, Surety Bond Branch, U.S. Department of the Treasury. All bonds signed by an agent or attorney-in-fact must be accompanied by a certified copy of that individual's authority to bind the surety. The evidence of authority shall show that it is effective on the date the agent or attorney-in-fact signed each bond.

C. If the surety on any bond furnished by Contractor is declared bankrupt or becomes insolvent or its right to do business is terminated in any state where any part of the Project is located or it ceases to meet the requirements of Paragraph 5.01.B, Contractor shall promptly notify Owner and Engineer and shall, within 20 days after the event giving rise to such notification, provide another bond and surety, both of which shall comply with the requirements of Paragraphs 5.01.B and 5.02.

5.02 *Licensed Sureties and Insurers*

A. All bonds and insurance required by the Contract Documents to be purchased and maintained by Owner or Contractor shall be obtained from surety or insurance companies that are duly licensed or authorized in the jurisdiction in which the Project is located to issue bonds or insurance policies for the limits and coverages so required. Such surety and insurance companies shall also

Copyright © 2007 National Society of Professional Engineers for EJCDC. All rights reserved.

meet such additional requirements and qualifications as may be provided in the Supplementary Conditions.

5.03 *Certificates of Insurance*

A. Contractor shall deliver to Owner, with copies to each additional insured and loss payee identified in the Supplementary Conditions, certificates of insurance (and other evidence of insurance requested by Owner or any other additional insured) which Contractor is required to purchase and maintain.

B. Owner shall deliver to Contractor, with copies to each additional insured and loss payee identified in the Supplementary Conditions, certificates of insurance (and other evidence of insurance requested by Contractor or any other additional insured) which Owner is required to purchase and maintain.

C. Failure of Owner to demand such certificates or other evidence of Contractor's full compliance with these insurance requirements or failure of Owner to identify a deficiency in compliance from the evidence provided shall not be construed as a waiver of Contractor's obligation to maintain such insurance.

D. Owner does not represent that insurance coverage and limits established in this Contract necessarily will be adequate to protect Contractor.

E. The insurance and insurance limits required herein shall not be deemed as a limitation on Contractor's liability under the indemnities granted to Owner in the Contract Documents.

5.04 *Contractor's Insurance*

A. Contractor shall purchase and maintain such insurance as is appropriate for the Work being performed and as will provide protection from claims set forth below which may arise out of or result from Contractor's performance of the Work and Contractor's other obligations under the Contract Documents, whether it is to be performed by Contractor, any Subcontractor or Supplier, or by anyone directly or indirectly employed by any of them to perform any of the Work, or by anyone for whose acts any of them may be liable:

1. claims under workers' compensation, disability benefits, and other similar employee benefit acts;

2. claims for damages because of bodily injury, occupational sickness or disease, or death of Contractor's employees;

3. claims for damages because of bodily injury, sickness or disease, or death of any person other than Contractor's employees;

4. claims for damages insured by reasonably available personal injury liability coverage which are sustained:

Copyright © 2007 National Society of Professional Engineers for EJCDC. All rights reserved.

a. by any person as a result of an offense directly or indirectly related to the employment of such person by Contractor, or

b. by any other person for any other reason;

5. claims for damages, other than to the Work itself, because of injury to or destruction of tangible property wherever located, including loss of use resulting therefrom; and

6. claims for damages because of bodily injury or death of any person or property damage arising out of the ownership, maintenance or use of any motor vehicle.

B. The policies of insurance required by this Paragraph 5.04 shall:

1. with respect to insurance required by Paragraphs 5.04.A.3 through 5.04.A.6 inclusive, be written on an occurrence basis, include as additional insureds (subject to any customary exclusion regarding professional liability) Owner and Engineer, and any other individuals or entities identified in the Supplementary Conditions, all of whom shall be listed as additional insureds, and include coverage for the respective officers, directors, members, partners, employees, agents, consultants, and subcontractors of each and any of all such additional insureds, and the insurance afforded to these additional insureds shall provide primary coverage for all claims covered thereby;

2. include at least the specific coverages and be written for not less than the limits of liability provided in the Supplementary Conditions or required by Laws or Regulations, whichever is greater;

3. include contractual liability insurance covering Contractor's indemnity obligations under Paragraphs 6.11 and 6.20;

4. contain a provision or endorsement that the coverage afforded will not be canceled, materially changed or renewal refused until at least 30 days prior written notice has been given to Owner and Contractor and to each other additional insured identified in the Supplementary Conditions to whom a certificate of insurance has been issued (and the certificates of insurance furnished by the Contractor pursuant to Paragraph 5.03 will so provide);

5. remain in effect at least until final payment and at all times thereafter when Contractor may be correcting, removing, or replacing defective Work in accordance with Paragraph 13.07; and

6. include completed operations coverage:

a. Such insurance shall remain in effect for two years after final payment.

b. Contractor shall furnish Owner and each other additional insured identified in the Supplementary Conditions, to whom a certificate of insurance has been issued, evidence satisfactory to Owner and any such additional insured of continuation of such insurance at final payment and one year thereafter.

Copyright © 2007 National Society of Professional Engineers for EJCDC. All rights reserved.

5.05 *Owner's Liability Insurance*

A. In addition to the insurance required to be provided by Contractor under Paragraph 5.04, Owner, at Owner's option, may purchase and maintain at Owner's expense Owner's own liability insurance as will protect Owner against claims which may arise from operations under the Contract Documents.

5.06 *Property Insurance*

A. Unless otherwise provided in the Supplementary Conditions, Owner shall purchase and maintain property insurance upon the Work at the Site in the amount of the full replacement cost thereof (subject to such deductible amounts as may be provided in the Supplementary Conditions or required by Laws and Regulations). This insurance shall:

1. include the interests of Owner, Contractor, Subcontractors, and Engineer, and any other individuals or entities identified in the Supplementary Conditions, and the officers, directors, members, partners, employees, agents, consultants, and subcontractors of each and any of them, each of whom is deemed to have an insurable interest and shall be listed as a loss payee;

2. be written on a Builder's Risk "all-risk" policy form that shall at least include insurance for physical loss or damage to the Work, temporary buildings, falsework, and materials and equipment in transit, and shall insure against at least the following perils or causes of loss: fire, lightning, extended coverage, theft, vandalism and malicious mischief, earthquake, collapse, debris removal, demolition occasioned by enforcement of Laws and Regulations, water damage (other than that caused by flood), and such other perils or causes of loss as may be specifically required by the Supplementary Conditions.

3. include expenses incurred in the repair or replacement of any insured property (including but not limited to fees and charges of engineers and architects);

4. cover materials and equipment stored at the Site or at another location that was agreed to in writing by Owner prior to being incorporated in the Work, provided that such materials and equipment have been included in an Application for Payment recommended by Engineer;

5. allow for partial utilization of the Work by Owner;

6. include testing and startup; and

7. be maintained in effect until final payment is made unless otherwise agreed to in writing by Owner, Contractor, and Engineer with 30 days written notice to each other loss payee to whom a certificate of insurance has been issued.

B. Owner shall purchase and maintain such equipment breakdown insurance or additional property insurance as may be required by the Supplementary Conditions or Laws and Regulations which will include the interests of Owner, Contractor, Subcontractors, and Engineer, and any other individuals or entities identified in the Supplementary Conditions, and the officers, directors,

Copyright © 2007 National Society of Professional Engineers for EJCDC. All rights reserved.

members, partners, employees, agents, consultants and subcontractors of each and any of them, each of whom is deemed to have an insurable interest and shall be listed as a loss payee.

C. All the policies of insurance (and the certificates or other evidence thereof) required to be purchased and maintained in accordance with this Paragraph 5.06 will contain a provision or endorsement that the coverage afforded will not be canceled or materially changed or renewal refused until at least 30 days prior written notice has been given to Owner and Contractor and to each other loss payee to whom a certificate of insurance has been issued and will contain waiver provisions in accordance with Paragraph 5.07.

D. Owner shall not be responsible for purchasing and maintaining any property insurance specified in this Paragraph 5.06 to protect the interests of Contractor, Subcontractors, or others in the Work to the extent of any deductible amounts that are identified in the Supplementary Conditions. The risk of loss within such identified deductible amount will be borne by Contractor, Subcontractors, or others suffering any such loss, and if any of them wishes property insurance coverage within the limits of such amounts, each may purchase and maintain it at the purchaser's own expense.

E. If Contractor requests in writing that other special insurance be included in the property insurance policies provided under this Paragraph 5.06, Owner shall, if possible, include such insurance, and the cost thereof will be charged to Contractor by appropriate Change Order. Prior to commencement of the Work at the Site, Owner shall in writing advise Contractor whether or not such other insurance has been procured by Owner.

5.07 *Waiver of Rights*

A. Owner and Contractor intend that all policies purchased in accordance with Paragraph 5.06 will protect Owner, Contractor, Subcontractors, and Engineer, and all other individuals or entities identified in the Supplementary Conditions as loss payees (and the officers, directors, members, partners, employees, agents, consultants, and subcontractors of each and any of them) in such policies and will provide primary coverage for all losses and damages caused by the perils or causes of loss covered thereby. All such policies shall contain provisions to the effect that in the event of payment of any loss or damage the insurers will have no rights of recovery against any of the insureds or loss payees thereunder. Owner and Contractor waive all rights against each other and their respective officers, directors, members, partners, employees, agents, consultants and subcontractors of each and any of them for all losses and damages caused by, arising out of or resulting from any of the perils or causes of loss covered by such policies and any other property insurance applicable to the Work; and, in addition, waive all such rights against Subcontractors and Engineer, and all other individuals or entities identified in the Supplementary Conditions as loss payees (and the officers, directors, members, partners, employees, agents, consultants, and subcontractors of each and any of them) under such policies for losses and damages so caused. None of the above waivers shall extend to the rights that any party making such waiver may have to the proceeds of insurance held by Owner as trustee or otherwise payable under any policy so issued.

B. Owner waives all rights against Contractor, Subcontractors, and Engineer, and the officers, directors, members, partners, employees, agents, consultants and subcontractors of each and any of them for:

Copyright © 2007 National Society of Professional Engineers for EJCDC. All rights reserved.

1. loss due to business interruption, loss of use, or other consequential loss extending beyond direct physical loss or damage to Owner's property or the Work caused by, arising out of, or resulting from fire or other perils whether or not insured by Owner; and

2. loss or damage to the completed Project or part thereof caused by, arising out of, or resulting from fire or other insured peril or cause of loss covered by any property insurance maintained on the completed Project or part thereof by Owner during partial utilization pursuant to Paragraph 14.05, after Substantial Completion pursuant to Paragraph 14.04, or after final payment pursuant to Paragraph 14.07.

C. Any insurance policy maintained by Owner covering any loss, damage or consequential loss referred to in Paragraph 5.07.B shall contain provisions to the effect that in the event of payment of any such loss, damage, or consequential loss, the insurers will have no rights of recovery against Contractor, Subcontractors, or Engineer, and the officers, directors, members, partners, employees, agents, consultants and subcontractors of each and any of them.

5.08 *Receipt and Application of Insurance Proceeds*

A. Any insured loss under the policies of insurance required by Paragraph 5.06 will be adjusted with Owner and made payable to Owner as fiduciary for the loss payees, as their interests may appear, subject to the requirements of any applicable mortgage clause and of Paragraph 5.08.B. Owner shall deposit in a separate account any money so received and shall distribute it in accordance with such agreement as the parties in interest may reach. If no other special agreement is reached, the damaged Work shall be repaired or replaced, the moneys so received applied on account thereof, and the Work and the cost thereof covered by an appropriate Change Order.

B. Owner as fiduciary shall have power to adjust and settle any loss with the insurers unless one of the parties in interest shall object in writing within 15 days after the occurrence of loss to Owner's exercise of this power. If such objection be made, Owner as fiduciary shall make settlement with the insurers in accordance with such agreement as the parties in interest may reach. If no such agreement among the parties in interest is reached, Owner as fiduciary shall adjust and settle the loss with the insurers and, if required in writing by any party in interest, Owner as fiduciary shall give bond for the proper performance of such duties.

5.09 *Acceptance of Bonds and Insurance; Option to Replace*

A. If either Owner or Contractor has any objection to the coverage afforded by or other provisions of the bonds or insurance required to be purchased and maintained by the other party in accordance with Article 5 on the basis of non-conformance with the Contract Documents, the objecting party shall so notify the other party in writing within 10 days after receipt of the certificates (or other evidence requested) required by Paragraph 2.01.B. Owner and Contractor shall each provide to the other such additional information in respect of insurance provided as the other may reasonably request. If either party does not purchase or maintain all of the bonds and insurance required of such party by the Contract Documents, such party shall notify the other party in writing of such failure to purchase prior to the start of the Work, or of such failure to maintain prior to any change in the required coverage. Without prejudice to any other right or remedy, the other party may elect to obtain equivalent bonds or insurance to protect such other party's

Copyright © 2007 National Society of Professional Engineers for EJCDC. All rights reserved.

interests at the expense of the party who was required to provide such coverage, and a Change Order shall be issued to adjust the Contract Price accordingly.

5.10 *Partial Utilization, Acknowledgment of Property Insurer*

A. If Owner finds it necessary to occupy or use a portion or portions of the Work prior to Substantial Completion of all the Work as provided in Paragraph 14.05, no such use or occupancy shall commence before the insurers providing the property insurance pursuant to Paragraph 5.06 have acknowledged notice thereof and in writing effected any changes in coverage necessitated thereby. The insurers providing the property insurance shall consent by endorsement on the policy or policies, but the property insurance shall not be canceled or permitted to lapse on account of any such partial use or occupancy.

ARTICLE 6 – CONTRACTOR'S RESPONSIBILITIES

6.01 *Supervision and Superintendence*

A. Contractor shall supervise, inspect, and direct the Work competently and efficiently, devoting such attention thereto and applying such skills and expertise as may be necessary to perform the Work in accordance with the Contract Documents. Contractor shall be solely responsible for the means, methods, techniques, sequences, and procedures of construction. Contractor shall not be responsible for the negligence of Owner or Engineer in the design or specification of a specific means, method, technique, sequence, or procedure of construction which is shown or indicated in and expressly required by the Contract Documents.

B. At all times during the progress of the Work, Contractor shall assign a competent resident superintendent who shall not be replaced without written notice to Owner and Engineer except under extraordinary circumstances.

6.02 *Labor; Working Hours*

A. Contractor shall provide competent, suitably qualified personnel to survey and lay out the Work and perform construction as required by the Contract Documents. Contractor shall at all times maintain good discipline and order at the Site.

B. Except as otherwise required for the safety or protection of persons or the Work or property at the Site or adjacent thereto, and except as otherwise stated in the Contract Documents, all Work at the Site shall be performed during regular working hours. Contractor will not permit the performance of Work on a Saturday, Sunday, or any legal holiday without Owner's written consent (which will not be unreasonably withheld) given after prior written notice to Engineer.

6.03 *Services, Materials, and Equipment*

A. Unless otherwise specified in the Contract Documents, Contractor shall provide and assume full responsibility for all services, materials, equipment, labor, transportation, construction equipment and machinery, tools, appliances, fuel, power, light, heat, telephone, water, sanitary facilities, temporary facilities, and all other facilities and incidentals necessary for the performance, testing, start-up, and completion of the Work.

Copyright © 2007 National Society of Professional Engineers for EJCDC. All rights reserved.

B. All materials and equipment incorporated into the Work shall be as specified or, if not specified, shall be of good quality and new, except as otherwise provided in the Contract Documents. All special warranties and guarantees required by the Specifications shall expressly run to the benefit of Owner. If required by Engineer, Contractor shall furnish satisfactory evidence (including reports of required tests) as to the source, kind, and quality of materials and equipment.

C. All materials and equipment shall be stored, applied, installed, connected, erected, protected, used, cleaned, and conditioned in accordance with instructions of the applicable Supplier, except as otherwise may be provided in the Contract Documents.

6.04 *Progress Schedule*

A. Contractor shall adhere to the Progress Schedule established in accordance with Paragraph 2.07 as it may be adjusted from time to time as provided below.

1. Contractor shall submit to Engineer for acceptance (to the extent indicated in Paragraph 2.07) proposed adjustments in the Progress Schedule that will not result in changing the Contract Times. Such adjustments will comply with any provisions of the General Requirements applicable thereto.

2. Proposed adjustments in the Progress Schedule that will change the Contract Times shall be submitted in accordance with the requirements of Article 12. Adjustments in Contract Times may only be made by a Change Order.

6.05 *Substitutes and "Or-Equals"*

A. Whenever an item of material or equipment is specified or described in the Contract Documents by using the name of a proprietary item or the name of a particular Supplier, the specification or description is intended to establish the type, function, appearance, and quality required. Unless the specification or description contains or is followed by words reading that no like, equivalent, or "or-equal" item or no substitution is permitted, other items of material or equipment or material or equipment of other Suppliers may be submitted to Engineer for review under the circumstances described below.

1. *"Or-Equal" Items:* If in Engineer's sole discretion an item of material or equipment proposed by Contractor is functionally equal to that named and sufficiently similar so that no change in related Work will be required, it may be considered by Engineer as an "or-equal" item, in which case review and approval of the proposed item may, in Engineer's sole discretion, be accomplished without compliance with some or all of the requirements for approval of proposed substitute items. For the purposes of this Paragraph 6.05.A.1, a proposed item of material or equipment will be considered functionally equal to an item so named if:

a. in the exercise of reasonable judgment Engineer determines that:

1) it is at least equal in materials of construction, quality, durability, appearance, strength, and design characteristics;

Copyright © 2007 National Society of Professional Engineers for EJCDC. All rights reserved.

2) it will reliably perform at least equally well the function and achieve the results imposed by the design concept of the completed Project as a functioning whole; and

3) it has a proven record of performance and availability of responsive service.

b. Contractor certifies that, if approved and incorporated into the Work:

1) there will be no increase in cost to the Owner or increase in Contract Times; and

2) it will conform substantially to the detailed requirements of the item named in the Contract Documents.

2. *Substitute Items:*

a. If in Engineer's sole discretion an item of material or equipment proposed by Contractor does not qualify as an "or-equal" item under Paragraph 6.05.A.1, it will be considered a proposed substitute item.

b. Contractor shall submit sufficient information as provided below to allow Engineer to determine if the item of material or equipment proposed is essentially equivalent to that named and an acceptable substitute therefor. Requests for review of proposed substitute items of material or equipment will not be accepted by Engineer from anyone other than Contractor.

c. The requirements for review by Engineer will be as set forth in Paragraph 6.05.A.2.d, as supplemented by the General Requirements, and as Engineer may decide is appropriate under the circumstances.

d. Contractor shall make written application to Engineer for review of a proposed substitute item of material or equipment that Contractor seeks to furnish or use. The application:

1) shall certify that the proposed substitute item will:

a) perform adequately the functions and achieve the results called for by the general design,

b) be similar in substance to that specified, and

c) be suited to the same use as that specified;

2) will state:

a) the extent, if any, to which the use of the proposed substitute item will prejudice Contractor's achievement of Substantial Completion on time,

b) whether use of the proposed substitute item in the Work will require a change in any of the Contract Documents (or in the provisions of any other direct contract with Owner for other work on the Project) to adapt the design to the proposed substitute item, and

Copyright © 2007 National Society of Professional Engineers for EJCDC. All rights reserved.

c) whether incorporation or use of the proposed substitute item in connection with the Work is subject to payment of any license fee or royalty;

3) will identify:

a) all variations of the proposed substitute item from that specified, and

b) available engineering, sales, maintenance, repair, and replacement services; and

4) shall contain an itemized estimate of all costs or credits that will result directly or indirectly from use of such substitute item, including costs of redesign and claims of other contractors affected by any resulting change.

B. *Substitute Construction Methods or Procedures:* If a specific means, method, technique, sequence, or procedure of construction is expressly required by the Contract Documents, Contractor may furnish or utilize a substitute means, method, technique, sequence, or procedure of construction approved by Engineer. Contractor shall submit sufficient information to allow Engineer, in Engineer's sole discretion, to determine that the substitute proposed is equivalent to that expressly called for by the Contract Documents. The requirements for review by Engineer will be similar to those provided in Paragraph 6.05.A.2.

C. *Engineer's Evaluation:* Engineer will be allowed a reasonable time within which to evaluate each proposal or submittal made pursuant to Paragraphs 6.05.A and 6.05.B. Engineer may require Contractor to furnish additional data about the proposed substitute item. Engineer will be the sole judge of acceptability. No "or equal" or substitute will be ordered, installed or utilized until Engineer's review is complete, which will be evidenced by a Change Order in the case of a substitute and an approved Shop Drawing for an "or equal." Engineer will advise Contractor in writing of any negative determination.

D. *Special Guarantee:* Owner may require Contractor to furnish at Contractor's expense a special performance guarantee or other surety with respect to any substitute.

E. *Engineer's Cost Reimbursement*: Engineer will record Engineer's costs in evaluating a substitute proposed or submitted by Contractor pursuant to Paragraphs 6.05.A.2 and 6.05.B. Whether or not Engineer approves a substitute so proposed or submitted by Contractor, Contractor shall reimburse Owner for the reasonable charges of Engineer for evaluating each such proposed substitute. Contractor shall also reimburse Owner for the reasonable charges of Engineer for making changes in the Contract Documents (or in the provisions of any other direct contract with Owner) resulting from the acceptance of each proposed substitute.

F. *Contractor's Expense*: Contractor shall provide all data in support of any proposed substitute or "or-equal" at Contractor's expense.

6.06 *Concerning Subcontractors, Suppliers, and Others*

A. Contractor shall not employ any Subcontractor, Supplier, or other individual or entity (including those acceptable to Owner as indicated in Paragraph 6.06.B), whether initially or as a replacement, against whom Owner may have reasonable objection. Contractor shall not be

Copyright © 2007 National Society of Professional Engineers for EJCDC. All rights reserved.

required to employ any Subcontractor, Supplier, or other individual or entity to furnish or perform any of the Work against whom Contractor has reasonable objection.

B. If the Supplementary Conditions require the identity of certain Subcontractors, Suppliers, or other individuals or entities to be submitted to Owner in advance for acceptance by Owner by a specified date prior to the Effective Date of the Agreement, and if Contractor has submitted a list thereof in accordance with the Supplementary Conditions, Owner's acceptance (either in writing or by failing to make written objection thereto by the date indicated for acceptance or objection in the Bidding Documents or the Contract Documents) of any such Subcontractor, Supplier, or other individual or entity so identified may be revoked on the basis of reasonable objection after due investigation. Contractor shall submit an acceptable replacement for the rejected Subcontractor, Supplier, or other individual or entity, and the Contract Price will be adjusted by the difference in the cost occasioned by such replacement, and an appropriate Change Order will be issued. No acceptance by Owner of any such Subcontractor, Supplier, or other individual or entity, whether initially or as a replacement, shall constitute a waiver of any right of Owner or Engineer to reject defective Work.

C. Contractor shall be fully responsible to Owner and Engineer for all acts and omissions of the Subcontractors, Suppliers, and other individuals or entities performing or furnishing any of the Work just as Contractor is responsible for Contractor's own acts and omissions. Nothing in the Contract Documents:

1. shall create for the benefit of any such Subcontractor, Supplier, or other individual or entity any contractual relationship between Owner or Engineer and any such Subcontractor, Supplier or other individual or entity; nor

2. shall create any obligation on the part of Owner or Engineer to pay or to see to the payment of any moneys due any such Subcontractor, Supplier, or other individual or entity except as may otherwise be required by Laws and Regulations.

D. Contractor shall be solely responsible for scheduling and coordinating the Work of Subcontractors, Suppliers, and other individuals or entities performing or furnishing any of the Work under a direct or indirect contract with Contractor.

E. Contractor shall require all Subcontractors, Suppliers, and such other individuals or entities performing or furnishing any of the Work to communicate with Engineer through Contractor.

F. The divisions and sections of the Specifications and the identifications of any Drawings shall not control Contractor in dividing the Work among Subcontractors or Suppliers or delineating the Work to be performed by any specific trade.

G. All Work performed for Contractor by a Subcontractor or Supplier will be pursuant to an appropriate agreement between Contractor and the Subcontractor or Supplier which specifically binds the Subcontractor or Supplier to the applicable terms and conditions of the Contract Documents for the benefit of Owner and Engineer. Whenever any such agreement is with a Subcontractor or Supplier who is listed as a loss payee on the property insurance provided in Paragraph 5.06, the agreement between the Contractor and the Subcontractor or Supplier will contain provisions whereby the Subcontractor or Supplier waives all rights against Owner,

Copyright © 2007 National Society of Professional Engineers for EJCDC. All rights reserved.

Contractor, Engineer, and all other individuals or entities identified in the Supplementary Conditions to be listed as insureds or loss payees (and the officers, directors, members, partners, employees, agents, consultants, and subcontractors of each and any of them) for all losses and damages caused by, arising out of, relating to, or resulting from any of the perils or causes of loss covered by such policies and any other property insurance applicable to the Work. If the insurers on any such policies require separate waiver forms to be signed by any Subcontractor or Supplier, Contractor will obtain the same.

6.07 *Patent Fees and Royalties*

A. Contractor shall pay all license fees and royalties and assume all costs incident to the use in the performance of the Work or the incorporation in the Work of any invention, design, process, product, or device which is the subject of patent rights or copyrights held by others. If a particular invention, design, process, product, or device is specified in the Contract Documents for use in the performance of the Work and if, to the actual knowledge of Owner or Engineer, its use is subject to patent rights or copyrights calling for the payment of any license fee or royalty to others, the existence of such rights shall be disclosed by Owner in the Contract Documents.

B. To the fullest extent permitted by Laws and Regulations, Owner shall indemnify and hold harmless Contractor, and its officers, directors, members, partners, employees, agents, consultants, and subcontractors from and against all claims, costs, losses, and damages (including but not limited to all fees and charges of engineers, architects, attorneys, and other professionals, and all court or arbitration or other dispute resolution costs) arising out of or relating to any infringement of patent rights or copyrights incident to the use in the performance of the Work or resulting from the incorporation in the Work of any invention, design, process, product, or device specified in the Contract Documents, but not identified as being subject to payment of any license fee or royalty to others required by patent rights or copyrights.

C. To the fullest extent permitted by Laws and Regulations, Contractor shall indemnify and hold harmless Owner and Engineer, and the officers, directors, members, partners, employees, agents, consultants and subcontractors of each and any of them from and against all claims, costs, losses, and damages (including but not limited to all fees and charges of engineers, architects, attorneys, and other professionals and all court or arbitration or other dispute resolution costs) arising out of or relating to any infringement of patent rights or copyrights incident to the use in the performance of the Work or resulting from the incorporation in the Work of any invention, design, process, product, or device not specified in the Contract Documents.

6.08 *Permits*

A. Unless otherwise provided in the Supplementary Conditions, Contractor shall obtain and pay for all construction permits and licenses. Owner shall assist Contractor, when necessary, in obtaining such permits and licenses. Contractor shall pay all governmental charges and inspection fees necessary for the prosecution of the Work which are applicable at the time of opening of Bids, or, if there are no Bids, on the Effective Date of the Agreement. Owner shall pay all charges of utility owners for connections for providing permanent service to the Work.

Copyright © 2007 National Society of Professional Engineers for EJCDC. All rights reserved.

6.09 *Laws and Regulations*

A. Contractor shall give all notices required by and shall comply with all Laws and Regulations applicable to the performance of the Work. Except where otherwise expressly required by applicable Laws and Regulations, neither Owner nor Engineer shall be responsible for monitoring Contractor's compliance with any Laws or Regulations.

B. If Contractor performs any Work knowing or having reason to know that it is contrary to Laws or Regulations, Contractor shall bear all claims, costs, losses, and damages (including but not limited to all fees and charges of engineers, architects, attorneys, and other professionals and all court or arbitration or other dispute resolution costs) arising out of or relating to such Work. However, it shall not be Contractor's responsibility to make certain that the Specifications and Drawings are in accordance with Laws and Regulations, but this shall not relieve Contractor of Contractor's obligations under Paragraph 3.03.

C. Changes in Laws or Regulations not known at the time of opening of Bids (or, on the Effective Date of the Agreement if there were no Bids) having an effect on the cost or time of performance of the Work shall be the subject of an adjustment in Contract Price or Contract Times. If Owner and Contractor are unable to agree on entitlement to or on the amount or extent, if any, of any such adjustment, a Claim may be made therefor as provided in Paragraph 10.05.

6.10 *Taxes*

A. Contractor shall pay all sales, consumer, use, and other similar taxes required to be paid by Contractor in accordance with the Laws and Regulations of the place of the Project which are applicable during the performance of the Work.

6.11 *Use of Site and Other Areas*

A. *Limitation on Use of Site and Other Areas:*

1. Contractor shall confine construction equipment, the storage of materials and equipment, and the operations of workers to the Site and other areas permitted by Laws and Regulations, and shall not unreasonably encumber the Site and other areas with construction equipment or other materials or equipment. Contractor shall assume full responsibility for any damage to any such land or area, or to the owner or occupant thereof, or of any adjacent land or areas resulting from the performance of the Work.

2. Should any claim be made by any such owner or occupant because of the performance of the Work, Contractor shall promptly settle with such other party by negotiation or otherwise resolve the claim by arbitration or other dispute resolution proceeding or at law.

3. To the fullest extent permitted by Laws and Regulations, Contractor shall indemnify and hold harmless Owner and Engineer, and the officers, directors, members, partners, employees, agents, consultants and subcontractors of each and any of them from and against all claims, costs, losses, and damages (including but not limited to all fees and charges of engineers, architects, attorneys, and other professionals and all court or arbitration or other dispute resolution costs) arising out of or relating to any claim or action, legal or equitable, brought

Copyright © 2007 National Society of Professional Engineers for EJCDC. All rights reserved.

by any such owner or occupant against Owner, Engineer, or any other party indemnified hereunder to the extent caused by or based upon Contractor's performance of the Work.

B. *Removal of Debris During Performance of the Work:* During the progress of the Work Contractor shall keep the Site and other areas free from accumulations of waste materials, rubbish, and other debris. Removal and disposal of such waste materials, rubbish, and other debris shall conform to applicable Laws and Regulations.

C. *Cleaning:* Prior to Substantial Completion of the Work Contractor shall clean the Site and the Work and make it ready for utilization by Owner. At the completion of the Work Contractor shall remove from the Site all tools, appliances, construction equipment and machinery, and surplus materials and shall restore to original condition all property not designated for alteration by the Contract Documents.

D. *Loading Structures:* Contractor shall not load nor permit any part of any structure to be loaded in any manner that will endanger the structure, nor shall Contractor subject any part of the Work or adjacent property to stresses or pressures that will endanger it.

6.12 *Record Documents*

A. Contractor shall maintain in a safe place at the Site one record copy of all Drawings, Specifications, Addenda, Change Orders, Work Change Directives, Field Orders, and written interpretations and clarifications in good order and annotated to show changes made during construction. These record documents together with all approved Samples and a counterpart of all approved Shop Drawings will be available to Engineer for reference. Upon completion of the Work, these record documents, Samples, and Shop Drawings will be delivered to Engineer for Owner.

6.13 *Safety and Protection*

A. Contractor shall be solely responsible for initiating, maintaining and supervising all safety precautions and programs in connection with the Work. Such responsibility does not relieve Subcontractors of their responsibility for the safety of persons or property in the performance of their work, nor for compliance with applicable safety Laws and Regulations. Contractor shall take all necessary precautions for the safety of, and shall provide the necessary protection to prevent damage, injury or loss to:

1. all persons on the Site or who may be affected by the Work;

2. all the Work and materials and equipment to be incorporated therein, whether in storage on or off the Site; and

3. other property at the Site or adjacent thereto, including trees, shrubs, lawns, walks, pavements, roadways, structures, utilities, and Underground Facilities not designated for removal, relocation, or replacement in the course of construction.

B. Contractor shall comply with all applicable Laws and Regulations relating to the safety of persons or property, or to the protection of persons or property from damage, injury, or loss; and

Copyright © 2007 National Society of Professional Engineers for EJCDC. All rights reserved.

shall erect and maintain all necessary safeguards for such safety and protection. Contractor shall notify owners of adjacent property and of Underground Facilities and other utility owners when prosecution of the Work may affect them, and shall cooperate with them in the protection, removal, relocation, and replacement of their property.

C. Contractor shall comply with the applicable requirements of Owner's safety programs, if any. The Supplementary Conditions identify any Owner's safety programs that are applicable to the Work.

D. Contractor shall inform Owner and Engineer of the specific requirements of Contractor's safety program with which Owner's and Engineer's employees and representatives must comply while at the Site.

E. All damage, injury, or loss to any property referred to in Paragraph 6.13.A.2 or 6.13.A.3 caused, directly or indirectly, in whole or in part, by Contractor, any Subcontractor, Supplier, or any other individual or entity directly or indirectly employed by any of them to perform any of the Work, or anyone for whose acts any of them may be liable, shall be remedied by Contractor (except damage or loss attributable to the fault of Drawings or Specifications or to the acts or omissions of Owner or Engineer or anyone employed by any of them, or anyone for whose acts any of them may be liable, and not attributable, directly or indirectly, in whole or in part, to the fault or negligence of Contractor or any Subcontractor, Supplier, or other individual or entity directly or indirectly employed by any of them).

F. Contractor's duties and responsibilities for safety and for protection of the Work shall continue until such time as all the Work is completed and Engineer has issued a notice to Owner and Contractor in accordance with Paragraph 14.07.B that the Work is acceptable (except as otherwise expressly provided in connection with Substantial Completion).

6.14 *Safety Representative*

A. Contractor shall designate a qualified and experienced safety representative at the Site whose duties and responsibilities shall be the prevention of accidents and the maintaining and supervising of safety precautions and programs.

6.15 *Hazard Communication Programs*

A. Contractor shall be responsible for coordinating any exchange of material safety data sheets or other hazard communication information required to be made available to or exchanged between or among employers at the Site in accordance with Laws or Regulations.

6.16 *Emergencies*

A. In emergencies affecting the safety or protection of persons or the Work or property at the Site or adjacent thereto, Contractor is obligated to act to prevent threatened damage, injury, or loss. Contractor shall give Engineer prompt written notice if Contractor believes that any significant changes in the Work or variations from the Contract Documents have been caused thereby or are required as a result thereof. If Engineer determines that a change in the Contract Documents is

Copyright © 2007 National Society of Professional Engineers for EJCDC. All rights reserved.

required because of the action taken by Contractor in response to such an emergency, a Work Change Directive or Change Order will be issued.

6.17 *Shop Drawings and Samples*

A. Contractor shall submit Shop Drawings and Samples to Engineer for review and approval in accordance with the accepted Schedule of Submittals (as required by Paragraph 2.07). Each submittal will be identified as Engineer may require.

1. *Shop Drawings:*

a. Submit number of copies specified in the General Requirements.

b. Data shown on the Shop Drawings will be complete with respect to quantities, dimensions, specified performance and design criteria, materials, and similar data to show Engineer the services, materials, and equipment Contractor proposes to provide and to enable Engineer to review the information for the limited purposes required by Paragraph 6.17.D.

2. *Samples:*

a. Submit number of Samples specified in the Specifications.

b. Clearly identify each Sample as to material, Supplier, pertinent data such as catalog numbers, the use for which intended and other data as Engineer may require to enable Engineer to review the submittal for the limited purposes required by Paragraph 6.17.D.

B. Where a Shop Drawing or Sample is required by the Contract Documents or the Schedule of Submittals, any related Work performed prior to Engineer's review and approval of the pertinent submittal will be at the sole expense and responsibility of Contractor.

C. *Submittal Procedures:*

1. Before submitting each Shop Drawing or Sample, Contractor shall have:

a. reviewed and coordinated each Shop Drawing or Sample with other Shop Drawings and Samples and with the requirements of the Work and the Contract Documents;

b. determined and verified all field measurements, quantities, dimensions, specified performance and design criteria, installation requirements, materials, catalog numbers, and similar information with respect thereto;

c. determined and verified the suitability of all materials offered with respect to the indicated application, fabrication, shipping, handling, storage, assembly, and installation pertaining to the performance of the Work; and

d. determined and verified all information relative to Contractor's responsibilities for means, methods, techniques, sequences, and procedures of construction, and safety precautions and programs incident thereto.

Copyright © 2007 National Society of Professional Engineers for EJCDC. All rights reserved.

2. Each submittal shall bear a stamp or specific written certification that Contractor has satisfied Contractor's obligations under the Contract Documents with respect to Contractor's review and approval of that submittal.

3. With each submittal, Contractor shall give Engineer specific written notice of any variations that the Shop Drawing or Sample may have from the requirements of the Contract Documents. This notice shall be both a written communication separate from the Shop Drawings or Sample submittal; and, in addition, by a specific notation made on each Shop Drawing or Sample submitted to Engineer for review and approval of each such variation.

D. *Engineer's Review:*

1. Engineer will provide timely review of Shop Drawings and Samples in accordance with the Schedule of Submittals acceptable to Engineer. Engineer's review and approval will be only to determine if the items covered by the submittals will, after installation or incorporation in the Work, conform to the information given in the Contract Documents and be compatible with the design concept of the completed Project as a functioning whole as indicated by the Contract Documents.

2. Engineer's review and approval will not extend to means, methods, techniques, sequences, or procedures of construction (except where a particular means, method, technique, sequence, or procedure of construction is specifically and expressly called for by the Contract Documents) or to safety precautions or programs incident thereto. The review and approval of a separate item as such will not indicate approval of the assembly in which the item functions.

3. Engineer's review and approval shall not relieve Contractor from responsibility for any variation from the requirements of the Contract Documents unless Contractor has complied with the requirements of Paragraph 6.17.C.3 and Engineer has given written approval of each such variation by specific written notation thereof incorporated in or accompanying the Shop Drawing or Sample. Engineer's review and approval shall not relieve Contractor from responsibility for complying with the requirements of Paragraph 6.17.C.1.

E. *Resubmittal Procedures:*

1. Contractor shall make corrections required by Engineer and shall return the required number of corrected copies of Shop Drawings and submit, as required, new Samples for review and approval. Contractor shall direct specific attention in writing to revisions other than the corrections called for by Engineer on previous submittals.

6.18 *Continuing the Work*

A. Contractor shall carry on the Work and adhere to the Progress Schedule during all disputes or disagreements with Owner. No Work shall be delayed or postponed pending resolution of any disputes or disagreements, except as permitted by Paragraph 15.04 or as Owner and Contractor may otherwise agree in writing.

Copyright © 2007 National Society of Professional Engineers for EJCDC. All rights reserved.

6.19 *Contractor's General Warranty and Guarantee*

A. Contractor warrants and guarantees to Owner that all Work will be in accordance with the Contract Documents and will not be defective. Engineer and its officers, directors, members, partners, employees, agents, consultants, and subcontractors shall be entitled to rely on representation of Contractor's warranty and guarantee.

B. Contractor's warranty and guarantee hereunder excludes defects or damage caused by:

1. abuse, modification, or improper maintenance or operation by persons other than Contractor, Subcontractors, Suppliers, or any other individual or entity for whom Contractor is responsible; or

2. normal wear and tear under normal usage.

C. Contractor's obligation to perform and complete the Work in accordance with the Contract Documents shall be absolute. None of the following will constitute an acceptance of Work that is not in accordance with the Contract Documents or a release of Contractor's obligation to perform the Work in accordance with the Contract Documents:

1. observations by Engineer;

2. recommendation by Engineer or payment by Owner of any progress or final payment;

3. the issuance of a certificate of Substantial Completion by Engineer or any payment related thereto by Owner;

4. use or occupancy of the Work or any part thereof by Owner;

5. any review and approval of a Shop Drawing or Sample submittal or the issuance of a notice of acceptability by Engineer;

6. any inspection, test, or approval by others; or

7. any correction of defective Work by Owner.

6.20 *Indemnification*

A. To the fullest extent permitted by Laws and Regulations, Contractor shall indemnify and hold harmless Owner and Engineer, and the officers, directors, members, partners, employees, agents, consultants and subcontractors of each and any of them from and against all claims, costs, losses, and damages (including but not limited to all fees and charges of engineers, architects, attorneys, and other professionals and all court or arbitration or other dispute resolution costs) arising out of or relating to the performance of the Work, provided that any such claim, cost, loss, or damage is attributable to bodily injury, sickness, disease, or death, or to injury to or destruction of tangible property (other than the Work itself), including the loss of use resulting therefrom but only to the extent caused by any negligent act or omission of Contractor, any Subcontractor, any Supplier, or any individual or entity directly or indirectly employed by any of them to perform any of the Work or anyone for whose acts any of them may be liable .

Copyright © 2007 National Society of Professional Engineers for EJCDC. All rights reserved.

B. In any and all claims against Owner or Engineer or any of their officers, directors, members, partners, employees, agents, consultants, or subcontractors by any employee (or the survivor or personal representative of such employee) of Contractor, any Subcontractor, any Supplier, or any individual or entity directly or indirectly employed by any of them to perform any of the Work, or anyone for whose acts any of them may be liable, the indemnification obligation under Paragraph 6.20.A shall not be limited in any way by any limitation on the amount or type of damages, compensation, or benefits payable by or for Contractor or any such Subcontractor, Supplier, or other individual or entity under workers' compensation acts, disability benefit acts, or other employee benefit acts.

C. The indemnification obligations of Contractor under Paragraph 6.20.A shall not extend to the liability of Engineer and Engineer's officers, directors, members, partners, employees, agents, consultants and subcontractors arising out of:

1. the preparation or approval of, or the failure to prepare or approve maps, Drawings, opinions, reports, surveys, Change Orders, designs, or Specifications; or

2. giving directions or instructions, or failing to give them, if that is the primary cause of the injury or damage.

6.21 *Delegation of Professional Design Services*

A. Contractor will not be required to provide professional design services unless such services are specifically required by the Contract Documents for a portion of the Work or unless such services are required to carry out Contractor's responsibilities for construction means, methods, techniques, sequences and procedures. Contractor shall not be required to provide professional services in violation of applicable law.

B. If professional design services or certifications by a design professional related to systems, materials or equipment are specifically required of Contractor by the Contract Documents, Owner and Engineer will specify all performance and design criteria that such services must satisfy. Contractor shall cause such services or certifications to be provided by a properly licensed professional, whose signature and seal shall appear on all drawings, calculations, specifications, certifications, Shop Drawings and other submittals prepared by such professional. Shop Drawings and other submittals related to the Work designed or certified by such professional, if prepared by others, shall bear such professional's written approval when submitted to Engineer.

C. Owner and Engineer shall be entitled to rely upon the adequacy, accuracy and completeness of the services, certifications or approvals performed by such design professionals, provided Owner and Engineer have specified to Contractor all performance and design criteria that such services must satisfy.

D. Pursuant to this Paragraph 6.21, Engineer's review and approval of design calculations and design drawings will be only for the limited purpose of checking for conformance with performance and design criteria given and the design concept expressed in the Contract Documents. Engineer's review and approval of Shop Drawings and other submittals (except design calculations and design drawings) will be only for the purpose stated in Paragraph 6.17.D.1.

Copyright © 2007 National Society of Professional Engineers for EJCDC. All rights reserved.

E. Contractor shall not be responsible for the adequacy of the performance or design criteria required by the Contract Documents.

ARTICLE 7 – OTHER WORK AT THE SITE

7.01 *Related Work at Site*

A. Owner may perform other work related to the Project at the Site with Owner's employees, or through other direct contracts therefor, or have other work performed by utility owners. If such other work is not noted in the Contract Documents, then:

1. written notice thereof will be given to Contractor prior to starting any such other work; and

2. if Owner and Contractor are unable to agree on entitlement to or on the amount or extent, if any, of any adjustment in the Contract Price or Contract Times that should be allowed as a result of such other work, a Claim may be made therefor as provided in Paragraph 10.05.

B. Contractor shall afford each other contractor who is a party to such a direct contract, each utility owner, and Owner, if Owner is performing other work with Owner's employees, proper and safe access to the Site, provide a reasonable opportunity for the introduction and storage of materials and equipment and the execution of such other work, and properly coordinate the Work with theirs. Contractor shall do all cutting, fitting, and patching of the Work that may be required to properly connect or otherwise make its several parts come together and properly integrate with such other work. Contractor shall not endanger any work of others by cutting, excavating, or otherwise altering such work; provided, however, that Contractor may cut or alter others' work with the written consent of Engineer and the others whose work will be affected. The duties and responsibilities of Contractor under this Paragraph are for the benefit of such utility owners and other contractors to the extent that there are comparable provisions for the benefit of Contractor in said direct contracts between Owner and such utility owners and other contractors.

C. If the proper execution or results of any part of Contractor's Work depends upon work performed by others under this Article 7, Contractor shall inspect such other work and promptly report to Engineer in writing any delays, defects, or deficiencies in such other work that render it unavailable or unsuitable for the proper execution and results of Contractor's Work. Contractor's failure to so report will constitute an acceptance of such other work as fit and proper for integration with Contractor's Work except for latent defects and deficiencies in such other work.

7.02 *Coordination*

A. If Owner intends to contract with others for the performance of other work on the Project at the Site, the following will be set forth in Supplementary Conditions:

1. the individual or entity who will have authority and responsibility for coordination of the activities among the various contractors will be identified;

2. the specific matters to be covered by such authority and responsibility will be itemized; and

3. the extent of such authority and responsibilities will be provided.

Copyright © 2007 National Society of Professional Engineers for EJCDC. All rights reserved.

B. Unless otherwise provided in the Supplementary Conditions, Owner shall have sole authority and responsibility for such coordination.

7.03 *Legal Relationships*

A. Paragraphs 7.01.A and 7.02 are not applicable for utilities not under the control of Owner.

B. Each other direct contract of Owner under Paragraph 7.01.A shall provide that the other contractor is liable to Owner and Contractor for the reasonable direct delay and disruption costs incurred by Contractor as a result of the other contractor's wrongful actions or inactions.

C. Contractor shall be liable to Owner and any other contractor under direct contract to Owner for the reasonable direct delay and disruption costs incurred by such other contractor as a result of Contractor's wrongful action or inactions.

ARTICLE 8 – OWNER'S RESPONSIBILITIES

8.01 *Communications to Contractor*

A. Except as otherwise provided in these General Conditions, Owner shall issue all communications to Contractor through Engineer.

8.02 *Replacement of Engineer*

A. In case of termination of the employment of Engineer, Owner shall appoint an engineer to whom Contractor makes no reasonable objection, whose status under the Contract Documents shall be that of the former Engineer.

8.03 *Furnish Data*

A. Owner shall promptly furnish the data required of Owner under the Contract Documents.

8.04 *Pay When Due*

A. Owner shall make payments to Contractor when they are due as provided in Paragraphs 14.02.C and 14.07.C.

8.05 *Lands and Easements; Reports and Tests*

A. Owner's duties with respect to providing lands and easements and providing engineering surveys to establish reference points are set forth in Paragraphs 4.01 and 4.05. Paragraph 4.02 refers to Owner's identifying and making available to Contractor copies of reports of explorations and tests of subsurface conditions and drawings of physical conditions relating to existing surface or subsurface structures at the Site.

8.06 *Insurance*

A. Owner's responsibilities, if any, with respect to purchasing and maintaining liability and property insurance are set forth in Article 5.

Copyright © 2007 National Society of Professional Engineers for EJCDC. All rights reserved.

8.07 *Change Orders*

A. Owner is obligated to execute Change Orders as indicated in Paragraph 10.03.

8.08 *Inspections, Tests, and Approvals*

A. Owner's responsibility with respect to certain inspections, tests, and approvals is set forth in Paragraph 13.03.B.

8.09 *Limitations on Owner's Responsibilities*

A. The Owner shall not supervise, direct, or have control or authority over, nor be responsible for, Contractor's means, methods, techniques, sequences, or procedures of construction, or the safety precautions and programs incident thereto, or for any failure of Contractor to comply with Laws and Regulations applicable to the performance of the Work. Owner will not be responsible for Contractor's failure to perform the Work in accordance with the Contract Documents.

8.10 *Undisclosed Hazardous Environmental Condition*

A. Owner's responsibility in respect to an undisclosed Hazardous Environmental Condition is set forth in Paragraph 4.06.

8.11 *Evidence of Financial Arrangements*

A. Upon request of Contractor, Owner shall furnish Contractor reasonable evidence that financial arrangements have been made to satisfy Owner's obligations under the Contract Documents.

8.12 *Compliance with Safety Program*

A. While at the Site, Owner's employees and representatives shall comply with the specific applicable requirements of Contractor's safety programs of which Owner has been informed pursuant to Paragraph 6.13.D.

ARTICLE 9 – ENGINEER'S STATUS DURING CONSTRUCTION

9.01 *Owner's Representative*

A. Engineer will be Owner's representative during the construction period. The duties and responsibilities and the limitations of authority of Engineer as Owner's representative during construction are set forth in the Contract Documents.

9.02 *Visits to Site*

A. Engineer will make visits to the Site at intervals appropriate to the various stages of construction as Engineer deems necessary in order to observe as an experienced and qualified design professional the progress that has been made and the quality of the various aspects of Contractor's executed Work. Based on information obtained during such visits and observations, Engineer, for the benefit of Owner, will determine, in general, if the Work is proceeding in accordance with the Contract Documents. Engineer will not be required to make exhaustive or

Copyright © 2007 National Society of Professional Engineers for EJCDC. All rights reserved.

continuous inspections on the Site to check the quality or quantity of the Work. Engineer's efforts will be directed toward providing for Owner a greater degree of confidence that the completed Work will conform generally to the Contract Documents. On the basis of such visits and observations, Engineer will keep Owner informed of the progress of the Work and will endeavor to guard Owner against defective Work.

B. Engineer's visits and observations are subject to all the limitations on Engineer's authority and responsibility set forth in Paragraph 9.09. Particularly, but without limitation, during or as a result of Engineer's visits or observations of Contractor's Work, Engineer will not supervise, direct, control, or have authority over or be responsible for Contractor's means, methods, techniques, sequences, or procedures of construction, or the safety precautions and programs incident thereto, or for any failure of Contractor to comply with Laws and Regulations applicable to the performance of the Work.

9.03 *Project Representative*

A. If Owner and Engineer agree, Engineer will furnish a Resident Project Representative to assist Engineer in providing more extensive observation of the Work. The authority and responsibilities of any such Resident Project Representative and assistants will be as provided in the Supplementary Conditions, and limitations on the responsibilities thereof will be as provided in Paragraph 9.09. If Owner designates another representative or agent to represent Owner at the Site who is not Engineer's consultant, agent or employee, the responsibilities and authority and limitations thereon of such other individual or entity will be as provided in the Supplementary Conditions.

9.04 *Authorized Variations in Work*

A. Engineer may authorize minor variations in the Work from the requirements of the Contract Documents which do not involve an adjustment in the Contract Price or the Contract Times and are compatible with the design concept of the completed Project as a functioning whole as indicated by the Contract Documents. These may be accomplished by a Field Order and will be binding on Owner and also on Contractor, who shall perform the Work involved promptly. If Owner or Contractor believes that a Field Order justifies an adjustment in the Contract Price or Contract Times, or both, and the parties are unable to agree on entitlement to or on the amount or extent, if any, of any such adjustment, a Claim may be made therefor as provided in Paragraph 10.05.

9.05 *Rejecting Defective Work*

A. Engineer will have authority to reject Work which Engineer believes to be defective, or that Engineer believes will not produce a completed Project that conforms to the Contract Documents or that will prejudice the integrity of the design concept of the completed Project as a functioning whole as indicated by the Contract Documents. Engineer will also have authority to require special inspection or testing of the Work as provided in Paragraph 13.04, whether or not the Work is fabricated, installed, or completed.

Copyright © 2007 National Society of Professional Engineers for EJCDC. All rights reserved.

9.06 *Shop Drawings, Change Orders and Payments*

A. In connection with Engineer's authority, and limitations thereof, as to Shop Drawings and Samples, see Paragraph 6.17.

B. In connection with Engineer's authority, and limitations thereof, as to design calculations and design drawings submitted in response to a delegation of professional design services, if any, see Paragraph 6.21.

C. In connection with Engineer's authority as to Change Orders, see Articles 10, 11, and 12.

D. In connection with Engineer's authority as to Applications for Payment, see Article 14.

9.07 *Determinations for Unit Price Work*

A. Engineer will determine the actual quantities and classifications of Unit Price Work performed by Contractor. Engineer will review with Contractor the Engineer's preliminary determinations on such matters before rendering a written decision thereon (by recommendation of an Application for Payment or otherwise). Engineer's written decision thereon will be final and binding (except as modified by Engineer to reflect changed factual conditions or more accurate data) upon Owner and Contractor, subject to the provisions of Paragraph 10.05.

9.08 *Decisions on Requirements of Contract Documents and Acceptability of Work*

A. Engineer will be the initial interpreter of the requirements of the Contract Documents and judge of the acceptability of the Work thereunder. All matters in question and other matters between Owner and Contractor arising prior to the date final payment is due relating to the acceptability of the Work, and the interpretation of the requirements of the Contract Documents pertaining to the performance of the Work, will be referred initially to Engineer in writing within 30 days of the event giving rise to the question.

B. Engineer will, with reasonable promptness, render a written decision on the issue referred. If Owner or Contractor believes that any such decision entitles them to an adjustment in the Contract Price or Contract Times or both, a Claim may be made under Paragraph 10.05. The date of Engineer's decision shall be the date of the event giving rise to the issues referenced for the purposes of Paragraph 10.05.B.

C. Engineer's written decision on the issue referred will be final and binding on Owner and Contractor, subject to the provisions of Paragraph 10.05.

D. When functioning as interpreter and judge under this Paragraph 9.08, Engineer will not show partiality to Owner or Contractor and will not be liable in connection with any interpretation or decision rendered in good faith in such capacity.

9.09 *Limitations on Engineer's Authority and Responsibilities*

A. Neither Engineer's authority or responsibility under this Article 9 or under any other provision of the Contract Documents nor any decision made by Engineer in good faith either to exercise or not

Copyright © 2007 National Society of Professional Engineers for EJCDC. All rights reserved.

exercise such authority or responsibility or the undertaking, exercise, or performance of any authority or responsibility by Engineer shall create, impose, or give rise to any duty in contract, tort, or otherwise owed by Engineer to Contractor, any Subcontractor, any Supplier, any other individual or entity, or to any surety for or employee or agent of any of them.

B. Engineer will not supervise, direct, control, or have authority over or be responsible for Contractor's means, methods, techniques, sequences, or procedures of construction, or the safety precautions and programs incident thereto, or for any failure of Contractor to comply with Laws and Regulations applicable to the performance of the Work. Engineer will not be responsible for Contractor's failure to perform the Work in accordance with the Contract Documents.

C. Engineer will not be responsible for the acts or omissions of Contractor or of any Subcontractor, any Supplier, or of any other individual or entity performing any of the Work.

D. Engineer's review of the final Application for Payment and accompanying documentation and all maintenance and operating instructions, schedules, guarantees, bonds, certificates of inspection, tests and approvals, and other documentation required to be delivered by Paragraph 14.07.A will only be to determine generally that their content complies with the requirements of, and in the case of certificates of inspections, tests, and approvals that the results certified indicate compliance with, the Contract Documents.

E. The limitations upon authority and responsibility set forth in this Paragraph 9.09 shall also apply to the Resident Project Representative, if any, and assistants, if any.

9.10 *Compliance with Safety Program*

A. While at the Site, Engineer's employees and representatives shall comply with the specific applicable requirements of Contractor's safety programs of which Engineer has been informed pursuant to Paragraph 6.13.D.

ARTICLE 10 – CHANGES IN THE WORK; CLAIMS

10.01 *Authorized Changes in the Work*

A. Without invalidating the Contract and without notice to any surety, Owner may, at any time or from time to time, order additions, deletions, or revisions in the Work by a Change Order, or a Work Change Directive. Upon receipt of any such document, Contractor shall promptly proceed with the Work involved which will be performed under the applicable conditions of the Contract Documents (except as otherwise specifically provided).

B. If Owner and Contractor are unable to agree on entitlement to, or on the amount or extent, if any, of an adjustment in the Contract Price or Contract Times, or both, that should be allowed as a result of a Work Change Directive, a Claim may be made therefor as provided in Paragraph 10.05.

Copyright © 2007 National Society of Professional Engineers for EJCDC. All rights reserved.

10.02 *Unauthorized Changes in the Work*

A. Contractor shall not be entitled to an increase in the Contract Price or an extension of the Contract Times with respect to any work performed that is not required by the Contract Documents as amended, modified, or supplemented as provided in Paragraph 3.04, except in the case of an emergency as provided in Paragraph 6.16 or in the case of uncovering Work as provided in Paragraph 13.04.D.

10.03 *Execution of Change Orders*

A. Owner and Contractor shall execute appropriate Change Orders recommended by Engineer covering:

1. changes in the Work which are: (i) ordered by Owner pursuant to Paragraph 10.01.A, (ii) required because of acceptance of defective Work under Paragraph 13.08.A or Owner's correction of defective Work under Paragraph 13.09, or (iii) agreed to by the parties;

2. changes in the Contract Price or Contract Times which are agreed to by the parties, including any undisputed sum or amount of time for Work actually performed in accordance with a Work Change Directive; and

3. changes in the Contract Price or Contract Times which embody the substance of any written decision rendered by Engineer pursuant to Paragraph 10.05; provided that, in lieu of executing any such Change Order, an appeal may be taken from any such decision in accordance with the provisions of the Contract Documents and applicable Laws and Regulations, but during any such appeal, Contractor shall carry on the Work and adhere to the Progress Schedule as provided in Paragraph 6.18.A.

10.04 *Notification to Surety*

A. If the provisions of any bond require notice to be given to a surety of any change affecting the general scope of the Work or the provisions of the Contract Documents (including, but not limited to, Contract Price or Contract Times), the giving of any such notice will be Contractor's responsibility. The amount of each applicable bond will be adjusted to reflect the effect of any such change.

10.05 *Claims*

A. *Engineer's Decision Required*: All Claims, except those waived pursuant to Paragraph 14.09, shall be referred to the Engineer for decision. A decision by Engineer shall be required as a condition precedent to any exercise by Owner or Contractor of any rights or remedies either may otherwise have under the Contract Documents or by Laws and Regulations in respect of such Claims.

B. *Notice:* Written notice stating the general nature of each Claim shall be delivered by the claimant to Engineer and the other party to the Contract promptly (but in no event later than 30 days) after the start of the event giving rise thereto. The responsibility to substantiate a Claim shall rest with the party making the Claim. Notice of the amount or extent of the Claim, with supporting data

Copyright © 2007 National Society of Professional Engineers for EJCDC. All rights reserved.

shall be delivered to the Engineer and the other party to the Contract within 60 days after the start of such event (unless Engineer allows additional time for claimant to submit additional or more accurate data in support of such Claim). A Claim for an adjustment in Contract Price shall be prepared in accordance with the provisions of Paragraph 12.01.B. A Claim for an adjustment in Contract Times shall be prepared in accordance with the provisions of Paragraph 12.02.B. Each Claim shall be accompanied by claimant's written statement that the adjustment claimed is the entire adjustment to which the claimant believes it is entitled as a result of said event. The opposing party shall submit any response to Engineer and the claimant within 30 days after receipt of the claimant's last submittal (unless Engineer allows additional time).

C. *Engineer's Action*: Engineer will review each Claim and, within 30 days after receipt of the last submittal of the claimant or the last submittal of the opposing party, if any, take one of the following actions in writing:

1. deny the Claim in whole or in part;

2. approve the Claim; or

3. notify the parties that the Engineer is unable to resolve the Claim if, in the Engineer's sole discretion, it would be inappropriate for the Engineer to do so. For purposes of further resolution of the Claim, such notice shall be deemed a denial.

D. In the event that Engineer does not take action on a Claim within said 30 days, the Claim shall be deemed denied.

E. Engineer's written action under Paragraph 10.05.C or denial pursuant to Paragraphs 10.05.C.3 or 10.05.D will be final and binding upon Owner and Contractor, unless Owner or Contractor invoke the dispute resolution procedure set forth in Article 16 within 30 days of such action or denial.

F. No Claim for an adjustment in Contract Price or Contract Times will be valid if not submitted in accordance with this Paragraph 10.05.

ARTICLE 11 – COST OF THE WORK; ALLOWANCES; UNIT PRICE WORK

11.01 *Cost of the Work*

A. *Costs Included:* The term Cost of the Work means the sum of all costs, except those excluded in Paragraph 11.01.B, necessarily incurred and paid by Contractor in the proper performance of the Work. When the value of any Work covered by a Change Order or when a Claim for an adjustment in Contract Price is determined on the basis of Cost of the Work, the costs to be reimbursed to Contractor will be only those additional or incremental costs required because of the change in the Work or because of the event giving rise to the Claim. Except as otherwise may be agreed to in writing by Owner, such costs shall be in amounts no higher than those prevailing in the locality of the Project, shall not include any of the costs itemized in Paragraph 11.01.B, and shall include only the following items:

Copyright © 2007 National Society of Professional Engineers for EJCDC. All rights reserved.

1. Payroll costs for employees in the direct employ of Contractor in the performance of the Work under schedules of job classifications agreed upon by Owner and Contractor. Such employees shall include, without limitation, superintendents, foremen, and other personnel employed full time on the Work. Payroll costs for employees not employed full time on the Work shall be apportioned on the basis of their time spent on the Work. Payroll costs shall include, but not be limited to, salaries and wages plus the cost of fringe benefits, which shall include social security contributions, unemployment, excise, and payroll taxes, workers' compensation, health and retirement benefits, bonuses, sick leave, vacation and holiday pay applicable thereto. The expenses of performing Work outside of regular working hours, on Saturday, Sunday, or legal holidays, shall be included in the above to the extent authorized by Owner.

2. Cost of all materials and equipment furnished and incorporated in the Work, including costs of transportation and storage thereof, and Suppliers' field services required in connection therewith. All cash discounts shall accrue to Contractor unless Owner deposits funds with Contractor with which to make payments, in which case the cash discounts shall accrue to Owner. All trade discounts, rebates and refunds and returns from sale of surplus materials and equipment shall accrue to Owner, and Contractor shall make provisions so that they may be obtained.

3. Payments made by Contractor to Subcontractors for Work performed by Subcontractors. If required by Owner, Contractor shall obtain competitive bids from subcontractors acceptable to Owner and Contractor and shall deliver such bids to Owner, who will then determine, with the advice of Engineer, which bids, if any, will be acceptable. If any subcontract provides that the Subcontractor is to be paid on the basis of Cost of the Work plus a fee, the Subcontractor's Cost of the Work and fee shall be determined in the same manner as Contractor's Cost of the Work and fee as provided in this Paragraph 11.01.

4. Costs of special consultants (including but not limited to engineers, architects, testing laboratories, surveyors, attorneys, and accountants) employed for services specifically related to the Work.

5. Supplemental costs including the following:

    a. The proportion of necessary transportation, travel, and subsistence expenses of Contractor's employees incurred in discharge of duties connected with the Work.

    b. Cost, including transportation and maintenance, of all materials, supplies, equipment, machinery, appliances, office, and temporary facilities at the Site, and hand tools not owned by the workers, which are consumed in the performance of the Work, and cost, less market value, of such items used but not consumed which remain the property of Contractor.

    c. Rentals of all construction equipment and machinery, and the parts thereof whether rented from Contractor or others in accordance with rental agreements approved by Owner with the advice of Engineer, and the costs of transportation, loading, unloading, assembly, dismantling, and removal thereof. All such costs shall be in accordance with the terms of

Copyright © 2007 National Society of Professional Engineers for EJCDC. All rights reserved.

said rental agreements. The rental of any such equipment, machinery, or parts shall cease when the use thereof is no longer necessary for the Work.

d. Sales, consumer, use, and other similar taxes related to the Work, and for which Contractor is liable, as imposed by Laws and Regulations.

e. Deposits lost for causes other than negligence of Contractor, any Subcontractor, or anyone directly or indirectly employed by any of them or for whose acts any of them may be liable, and royalty payments and fees for permits and licenses.

f. Losses and damages (and related expenses) caused by damage to the Work, not compensated by insurance or otherwise, sustained by Contractor in connection with the performance of the Work (except losses and damages within the deductible amounts of property insurance established in accordance with Paragraph 5.06.D), provided such losses and damages have resulted from causes other than the negligence of Contractor, any Subcontractor, or anyone directly or indirectly employed by any of them or for whose acts any of them may be liable. Such losses shall include settlements made with the written consent and approval of Owner. No such losses, damages, and expenses shall be included in the Cost of the Work for the purpose of determining Contractor's fee.

g. The cost of utilities, fuel, and sanitary facilities at the Site.

h. Minor expenses such as telegrams, long distance telephone calls, telephone service at the Site, express and courier services, and similar petty cash items in connection with the Work.

i. The costs of premiums for all bonds and insurance Contractor is required by the Contract Documents to purchase and maintain.

B. *Costs Excluded:* The term Cost of the Work shall not include any of the following items:

1. Payroll costs and other compensation of Contractor's officers, executives, principals (of partnerships and sole proprietorships), general managers, safety managers, engineers, architects, estimators, attorneys, auditors, accountants, purchasing and contracting agents, expediters, timekeepers, clerks, and other personnel employed by Contractor, whether at the Site or in Contractor's principal or branch office for general administration of the Work and not specifically included in the agreed upon schedule of job classifications referred to in Paragraph 11.01.A.1 or specifically covered by Paragraph 11.01.A.4, all of which are to be considered administrative costs covered by the Contractor's fee.

2. Expenses of Contractor's principal and branch offices other than Contractor's office at the Site.

3. Any part of Contractor's capital expenses, including interest on Contractor's capital employed for the Work and charges against Contractor for delinquent payments.

4. Costs due to the negligence of Contractor, any Subcontractor, or anyone directly or indirectly employed by any of them or for whose acts any of them may be liable, including but not

Copyright © 2007 National Society of Professional Engineers for EJCDC. All rights reserved.

limited to, the correction of defective Work, disposal of materials or equipment wrongly supplied, and making good any damage to property.

5. Other overhead or general expense costs of any kind and the costs of any item not specifically and expressly included in Paragraphs 11.01.A.

C. *Contractor's Fee:* When all the Work is performed on the basis of cost-plus, Contractor's fee shall be determined as set forth in the Agreement. When the value of any Work covered by a Change Order or when a Claim for an adjustment in Contract Price is determined on the basis of Cost of the Work, Contractor's fee shall be determined as set forth in Paragraph 12.01.C.

D. *Documentation:* Whenever the Cost of the Work for any purpose is to be determined pursuant to Paragraphs 11.01.A and 11.01.B, Contractor will establish and maintain records thereof in accordance with generally accepted accounting practices and submit in a form acceptable to Engineer an itemized cost breakdown together with supporting data.

11.02 *Allowances*

A. It is understood that Contractor has included in the Contract Price all allowances so named in the Contract Documents and shall cause the Work so covered to be performed for such sums and by such persons or entities as may be acceptable to Owner and Engineer.

B. *Cash Allowances:*

1. Contractor agrees that:

a. the cash allowances include the cost to Contractor (less any applicable trade discounts) of materials and equipment required by the allowances to be delivered at the Site, and all applicable taxes; and

b. Contractor's costs for unloading and handling on the Site, labor, installation, overhead, profit, and other expenses contemplated for the cash allowances have been included in the Contract Price and not in the allowances, and no demand for additional payment on account of any of the foregoing will be valid.

C. *Contingency Allowance:*

1. Contractor agrees that a contingency allowance, if any, is for the sole use of Owner to cover unanticipated costs.

D. Prior to final payment, an appropriate Change Order will be issued as recommended by Engineer to reflect actual amounts due Contractor on account of Work covered by allowances, and the Contract Price shall be correspondingly adjusted.

11.03 *Unit Price Work*

A. Where the Contract Documents provide that all or part of the Work is to be Unit Price Work, initially the Contract Price will be deemed to include for all Unit Price Work an amount equal to

Copyright © 2007 National Society of Professional Engineers for EJCDC. All rights reserved.

the sum of the unit price for each separately identified item of Unit Price Work times the estimated quantity of each item as indicated in the Agreement.

B. The estimated quantities of items of Unit Price Work are not guaranteed and are solely for the purpose of comparison of Bids and determining an initial Contract Price. Determinations of the actual quantities and classifications of Unit Price Work performed by Contractor will be made by Engineer subject to the provisions of Paragraph 9.07.

C. Each unit price will be deemed to include an amount considered by Contractor to be adequate to cover Contractor's overhead and profit for each separately identified item.

D. Owner or Contractor may make a Claim for an adjustment in the Contract Price in accordance with Paragraph 10.05 if:

1. the quantity of any item of Unit Price Work performed by Contractor differs materially and significantly from the estimated quantity of such item indicated in the Agreement; and

2. there is no corresponding adjustment with respect to any other item of Work; and

3. Contractor believes that Contractor is entitled to an increase in Contract Price as a result of having incurred additional expense or Owner believes that Owner is entitled to a decrease in Contract Price and the parties are unable to agree as to the amount of any such increase or decrease.

ARTICLE 12 – CHANGE OF CONTRACT PRICE; CHANGE OF CONTRACT TIMES

12.01 *Change of Contract Price*

A. The Contract Price may only be changed by a Change Order. Any Claim for an adjustment in the Contract Price shall be based on written notice submitted by the party making the Claim to the Engineer and the other party to the Contract in accordance with the provisions of Paragraph 10.05.

B. The value of any Work covered by a Change Order or of any Claim for an adjustment in the Contract Price will be determined as follows:

1. where the Work involved is covered by unit prices contained in the Contract Documents, by application of such unit prices to the quantities of the items involved (subject to the provisions of Paragraph 11.03); or

2. where the Work involved is not covered by unit prices contained in the Contract Documents, by a mutually agreed lump sum (which may include an allowance for overhead and profit not necessarily in accordance with Paragraph 12.01.C.2); or

3. where the Work involved is not covered by unit prices contained in the Contract Documents and agreement to a lump sum is not reached under Paragraph 12.01.B.2, on the basis of the Cost of the Work (determined as provided in Paragraph 11.01) plus a Contractor's fee for overhead and profit (determined as provided in Paragraph 12.01.C).

Copyright © 2007 National Society of Professional Engineers for EJCDC. All rights reserved.

C. *Contractor's Fee:* The Contractor's fee for overhead and profit shall be determined as follows:

1. a mutually acceptable fixed fee; or

2. if a fixed fee is not agreed upon, then a fee based on the following percentages of the various portions of the Cost of the Work:

   a. for costs incurred under Paragraphs 11.01.A.1 and 11.01.A.2, the Contractor's fee shall be 15 percent;

   b. for costs incurred under Paragraph 11.01.A.3, the Contractor's fee shall be five percent;

   c. where one or more tiers of subcontracts are on the basis of Cost of the Work plus a fee and no fixed fee is agreed upon, the intent of Paragraphs 12.01.C.2.a and 12.01.C.2.b is that the Subcontractor who actually performs the Work, at whatever tier, will be paid a fee of 15 percent of the costs incurred by such Subcontractor under Paragraphs 11.01.A.1 and 11.01.A.2 and that any higher tier Subcontractor and Contractor will each be paid a fee of five percent of the amount paid to the next lower tier Subcontractor;

   d. no fee shall be payable on the basis of costs itemized under Paragraphs 11.01.A.4, 11.01.A.5, and 11.01.B;

   e. the amount of credit to be allowed by Contractor to Owner for any change which results in a net decrease in cost will be the amount of the actual net decrease in cost plus a deduction in Contractor's fee by an amount equal to five percent of such net decrease; and

   f. when both additions and credits are involved in any one change, the adjustment in Contractor's fee shall be computed on the basis of the net change in accordance with Paragraphs 12.01.C.2.a through 12.01.C.2.e, inclusive.

12.02 *Change of Contract Times*

A. The Contract Times may only be changed by a Change Order. Any Claim for an adjustment in the Contract Times shall be based on written notice submitted by the party making the Claim to the Engineer and the other party to the Contract in accordance with the provisions of Paragraph 10.05.

B. Any adjustment of the Contract Times covered by a Change Order or any Claim for an adjustment in the Contract Times will be determined in accordance with the provisions of this Article 12.

12.03 *Delays*

A. Where Contractor is prevented from completing any part of the Work within the Contract Times due to delay beyond the control of Contractor, the Contract Times will be extended in an amount equal to the time lost due to such delay if a Claim is made therefor as provided in Paragraph 12.02.A. Delays beyond the control of Contractor shall include, but not be limited to, acts or

Copyright © 2007 National Society of Professional Engineers for EJCDC. All rights reserved.

neglect by Owner, acts or neglect of utility owners or other contractors performing other work as contemplated by Article 7, fires, floods, epidemics, abnormal weather conditions, or acts of God.

B. If Owner, Engineer, or other contractors or utility owners performing other work for Owner as contemplated by Article 7, or anyone for whom Owner is responsible, delays, disrupts, or interferes with the performance or progress of the Work, then Contractor shall be entitled to an equitable adjustment in the Contract Price or the Contract Times, or both. Contractor's entitlement to an adjustment of the Contract Times is conditioned on such adjustment being essential to Contractor's ability to complete the Work within the Contract Times.

C. If Contractor is delayed in the performance or progress of the Work by fire, flood, epidemic, abnormal weather conditions, acts of God, acts or failures to act of utility owners not under the control of Owner, or other causes not the fault of and beyond control of Owner and Contractor, then Contractor shall be entitled to an equitable adjustment in Contract Times, if such adjustment is essential to Contractor's ability to complete the Work within the Contract Times. Such an adjustment shall be Contractor's sole and exclusive remedy for the delays described in this Paragraph 12.03.C.

D. Owner, Engineer, and their officers, directors, members, partners, employees, agents, consultants, or subcontractors shall not be liable to Contractor for any claims, costs, losses, or damages (including but not limited to all fees and charges of engineers, architects, attorneys, and other professionals and all court or arbitration or other dispute resolution costs) sustained by Contractor on or in connection with any other project or anticipated project.

E. Contractor shall not be entitled to an adjustment in Contract Price or Contract Times for delays within the control of Contractor. Delays attributable to and within the control of a Subcontractor or Supplier shall be deemed to be delays within the control of Contractor.

ARTICLE 13 – TESTS AND INSPECTIONS; CORRECTION, REMOVAL OR ACCEPTANCE OF DEFECTIVE WORK

13.01 *Notice of Defects*

A. Prompt notice of all defective Work of which Owner or Engineer has actual knowledge will be given to Contractor. Defective Work may be rejected, corrected, or accepted as provided in this Article 13.

13.02 *Access to Work*

A. Owner, Engineer, their consultants and other representatives and personnel of Owner, independent testing laboratories, and governmental agencies with jurisdictional interests will have access to the Site and the Work at reasonable times for their observation, inspection, and testing. Contractor shall provide them proper and safe conditions for such access and advise them of Contractor's safety procedures and programs so that they may comply therewith as applicable.

Copyright © 2007 National Society of Professional Engineers for EJCDC. All rights reserved.

13.03 *Tests and Inspections*

A. Contractor shall give Engineer timely notice of readiness of the Work for all required inspections, tests, or approvals and shall cooperate with inspection and testing personnel to facilitate required inspections or tests.

B. Owner shall employ and pay for the services of an independent testing laboratory to perform all inspections, tests, or approvals required by the Contract Documents except:

1. for inspections, tests, or approvals covered by Paragraphs 13.03.C and 13.03.D below;

2. that costs incurred in connection with tests or inspections conducted pursuant to Paragraph 13.04.B shall be paid as provided in Paragraph 13.04.C; and

3. as otherwise specifically provided in the Contract Documents.

C. If Laws or Regulations of any public body having jurisdiction require any Work (or part thereof) specifically to be inspected, tested, or approved by an employee or other representative of such public body, Contractor shall assume full responsibility for arranging and obtaining such inspections, tests, or approvals, pay all costs in connection therewith, and furnish Engineer the required certificates of inspection or approval.

D. Contractor shall be responsible for arranging and obtaining and shall pay all costs in connection with any inspections, tests, or approvals required for Owner's and Engineer's acceptance of materials or equipment to be incorporated in the Work; or acceptance of materials, mix designs, or equipment submitted for approval prior to Contractor's purchase thereof for incorporation in the Work. Such inspections, tests, or approvals shall be performed by organizations acceptable to Owner and Engineer.

E. If any Work (or the work of others) that is to be inspected, tested, or approved is covered by Contractor without written concurrence of Engineer, Contractor shall, if requested by Engineer, uncover such Work for observation.

F. Uncovering Work as provided in Paragraph 13.03.E shall be at Contractor's expense unless Contractor has given Engineer timely notice of Contractor's intention to cover the same and Engineer has not acted with reasonable promptness in response to such notice.

13.04 *Uncovering Work*

A. If any Work is covered contrary to the written request of Engineer, it must, if requested by Engineer, be uncovered for Engineer's observation and replaced at Contractor's expense.

B. If Engineer considers it necessary or advisable that covered Work be observed by Engineer or inspected or tested by others, Contractor, at Engineer's request, shall uncover, expose, or otherwise make available for observation, inspection, or testing as Engineer may require, that portion of the Work in question, furnishing all necessary labor, material, and equipment.

Copyright © 2007 National Society of Professional Engineers for EJCDC. All rights reserved.

C. If it is found that the uncovered Work is defective, Contractor shall pay all claims, costs, losses, and damages (including but not limited to all fees and charges of engineers, architects, attorneys, and other professionals and all court or arbitration or other dispute resolution costs) arising out of or relating to such uncovering, exposure, observation, inspection, and testing, and of satisfactory replacement or reconstruction (including but not limited to all costs of repair or replacement of work of others); and Owner shall be entitled to an appropriate decrease in the Contract Price. If the parties are unable to agree as to the amount thereof, Owner may make a Claim therefor as provided in Paragraph 10.05.

D. If the uncovered Work is not found to be defective, Contractor shall be allowed an increase in the Contract Price or an extension of the Contract Times, or both, directly attributable to such uncovering, exposure, observation, inspection, testing, replacement, and reconstruction. If the parties are unable to agree as to the amount or extent thereof, Contractor may make a Claim therefor as provided in Paragraph 10.05.

13.05 *Owner May Stop the Work*

A. If the Work is defective, or Contractor fails to supply sufficient skilled workers or suitable materials or equipment, or fails to perform the Work in such a way that the completed Work will conform to the Contract Documents, Owner may order Contractor to stop the Work, or any portion thereof, until the cause for such order has been eliminated; however, this right of Owner to stop the Work shall not give rise to any duty on the part of Owner to exercise this right for the benefit of Contractor, any Subcontractor, any Supplier, any other individual or entity, or any surety for, or employee or agent of any of them.

13.06 *Correction or Removal of Defective Work*

A. Promptly after receipt of written notice, Contractor shall correct all defective Work, whether or not fabricated, installed, or completed, or, if the Work has been rejected by Engineer, remove it from the Project and replace it with Work that is not defective. Contractor shall pay all claims, costs, losses, and damages (including but not limited to all fees and charges of engineers, architects, attorneys, and other professionals and all court or arbitration or other dispute resolution costs) arising out of or relating to such correction or removal (including but not limited to all costs of repair or replacement of work of others).

B. When correcting defective Work under the terms of this Paragraph 13.06 or Paragraph 13.07, Contractor shall take no action that would void or otherwise impair Owner's special warranty and guarantee, if any, on said Work.

13.07 *Correction Period*

A. If within one year after the date of Substantial Completion (or such longer period of time as may be prescribed by the terms of any applicable special guarantee required by the Contract Documents) or by any specific provision of the Contract Documents, any Work is found to be defective, or if the repair of any damages to the land or areas made available for Contractor's use by Owner or permitted by Laws and Regulations as contemplated in Paragraph 6.11.A is found to be defective, Contractor shall promptly, without cost to Owner and in accordance with Owner's written instructions:

Copyright © 2007 National Society of Professional Engineers for EJCDC. All rights reserved.

1. repair such defective land or areas; or

2. correct such defective Work; or

3. if the defective Work has been rejected by Owner, remove it from the Project and replace it with Work that is not defective, and

4. satisfactorily correct or repair or remove and replace any damage to other Work, to the work of others or other land or areas resulting therefrom.

B. If Contractor does not promptly comply with the terms of Owner's written instructions, or in an emergency where delay would cause serious risk of loss or damage, Owner may have the defective Work corrected or repaired or may have the rejected Work removed and replaced. All claims, costs, losses, and damages (including but not limited to all fees and charges of engineers, architects, attorneys, and other professionals and all court or arbitration or other dispute resolution costs) arising out of or relating to such correction or repair or such removal and replacement (including but not limited to all costs of repair or replacement of work of others) will be paid by Contractor.

C. In special circumstances where a particular item of equipment is placed in continuous service before Substantial Completion of all the Work, the correction period for that item may start to run from an earlier date if so provided in the Specifications.

D. Where defective Work (and damage to other Work resulting therefrom) has been corrected or removed and replaced under this Paragraph 13.07, the correction period hereunder with respect to such Work will be extended for an additional period of one year after such correction or removal and replacement has been satisfactorily completed.

E. Contractor's obligations under this Paragraph 13.07 are in addition to any other obligation or warranty. The provisions of this Paragraph 13.07 shall not be construed as a substitute for, or a waiver of, the provisions of any applicable statute of limitation or repose.

13.08 *Acceptance of Defective Work*

A. If, instead of requiring correction or removal and replacement of defective Work, Owner (and, prior to Engineer's recommendation of final payment, Engineer) prefers to accept it, Owner may do so. Contractor shall pay all claims, costs, losses, and damages (including but not limited to all fees and charges of engineers, architects, attorneys, and other professionals and all court or arbitration or other dispute resolution costs) attributable to Owner's evaluation of and determination to accept such defective Work (such costs to be approved by Engineer as to reasonableness) and for the diminished value of the Work to the extent not otherwise paid by Contractor pursuant to this sentence. If any such acceptance occurs prior to Engineer's recommendation of final payment, a Change Order will be issued incorporating the necessary revisions in the Contract Documents with respect to the Work, and Owner shall be entitled to an appropriate decrease in the Contract Price, reflecting the diminished value of Work so accepted. If the parties are unable to agree as to the amount thereof, Owner may make a Claim therefor as provided in Paragraph 10.05. If the acceptance occurs after such recommendation, an appropriate amount will be paid by Contractor to Owner.

Copyright © 2007 National Society of Professional Engineers for EJCDC. All rights reserved.

13.09 *Owner May Correct Defective Work*

A. If Contractor fails within a reasonable time after written notice from Engineer to correct defective Work, or to remove and replace rejected Work as required by Engineer in accordance with Paragraph 13.06.A, or if Contractor fails to perform the Work in accordance with the Contract Documents, or if Contractor fails to comply with any other provision of the Contract Documents, Owner may, after seven days written notice to Contractor, correct, or remedy any such deficiency.

B. In exercising the rights and remedies under this Paragraph 13.09, Owner shall proceed expeditiously. In connection with such corrective or remedial action, Owner may exclude Contractor from all or part of the Site, take possession of all or part of the Work and suspend Contractor's services related thereto, take possession of Contractor's tools, appliances, construction equipment and machinery at the Site, and incorporate in the Work all materials and equipment stored at the Site or for which Owner has paid Contractor but which are stored elsewhere. Contractor shall allow Owner, Owner's representatives, agents and employees, Owner's other contractors, and Engineer and Engineer's consultants access to the Site to enable Owner to exercise the rights and remedies under this Paragraph.

C. All claims, costs, losses, and damages (including but not limited to all fees and charges of engineers, architects, attorneys, and other professionals and all court or arbitration or other dispute resolution costs) incurred or sustained by Owner in exercising the rights and remedies under this Paragraph 13.09 will be charged against Contractor, and a Change Order will be issued incorporating the necessary revisions in the Contract Documents with respect to the Work; and Owner shall be entitled to an appropriate decrease in the Contract Price. If the parties are unable to agree as to the amount of the adjustment, Owner may make a Claim therefor as provided in Paragraph 10.05. Such claims, costs, losses and damages will include but not be limited to all costs of repair, or replacement of work of others destroyed or damaged by correction, removal, or replacement of Contractor's defective Work.

D. Contractor shall not be allowed an extension of the Contract Times because of any delay in the performance of the Work attributable to the exercise by Owner of Owner's rights and remedies under this Paragraph 13.09.

ARTICLE 14 – PAYMENTS TO CONTRACTOR AND COMPLETION

14.01 *Schedule of Values*

A. The Schedule of Values established as provided in Paragraph 2.07.A will serve as the basis for progress payments and will be incorporated into a form of Application for Payment acceptable to Engineer. Progress payments on account of Unit Price Work will be based on the number of units completed.

14.02 *Progress Payments*

A. *Applications for Payments:*

1. At least 20 days before the date established in the Agreement for each progress payment (but not more often than once a month), Contractor shall submit to Engineer for review an

Copyright © 2007 National Society of Professional Engineers for EJCDC. All rights reserved.

Application for Payment filled out and signed by Contractor covering the Work completed as of the date of the Application and accompanied by such supporting documentation as is required by the Contract Documents. If payment is requested on the basis of materials and equipment not incorporated in the Work but delivered and suitably stored at the Site or at another location agreed to in writing, the Application for Payment shall also be accompanied by a bill of sale, invoice, or other documentation warranting that Owner has received the materials and equipment free and clear of all Liens and evidence that the materials and equipment are covered by appropriate property insurance or other arrangements to protect Owner's interest therein, all of which must be satisfactory to Owner.

2. Beginning with the second Application for Payment, each Application shall include an affidavit of Contractor stating that all previous progress payments received on account of the Work have been applied on account to discharge Contractor's legitimate obligations associated with prior Applications for Payment.

3. The amount of retainage with respect to progress payments will be as stipulated in the Agreement.

B. *Review of Applications:*

1. Engineer will, within 10 days after receipt of each Application for Payment, either indicate in writing a recommendation of payment and present the Application to Owner or return the Application to Contractor indicating in writing Engineer's reasons for refusing to recommend payment. In the latter case, Contractor may make the necessary corrections and resubmit the Application.

2. Engineer's recommendation of any payment requested in an Application for Payment will constitute a representation by Engineer to Owner, based on Engineer's observations of the executed Work as an experienced and qualified design professional, and on Engineer's review of the Application for Payment and the accompanying data and schedules, that to the best of Engineer's knowledge, information and belief:

   a. the Work has progressed to the point indicated;

   b. the quality of the Work is generally in accordance with the Contract Documents (subject to an evaluation of the Work as a functioning whole prior to or upon Substantial Completion, the results of any subsequent tests called for in the Contract Documents, a final determination of quantities and classifications for Unit Price Work under Paragraph 9.07, and any other qualifications stated in the recommendation); and

   c. the conditions precedent to Contractor's being entitled to such payment appear to have been fulfilled in so far as it is Engineer's responsibility to observe the Work.

3. By recommending any such payment Engineer will not thereby be deemed to have represented that:

   a. inspections made to check the quality or the quantity of the Work as it has been performed have been exhaustive, extended to every aspect of the Work in progress, or

Copyright © 2007 National Society of Professional Engineers for EJCDC. All rights reserved.

involved detailed inspections of the Work beyond the responsibilities specifically assigned to Engineer in the Contract Documents; or

b. there may not be other matters or issues between the parties that might entitle Contractor to be paid additionally by Owner or entitle Owner to withhold payment to Contractor.

4. Neither Engineer's review of Contractor's Work for the purposes of recommending payments nor Engineer's recommendation of any payment, including final payment, will impose responsibility on Engineer:

   a. to supervise, direct, or control the Work, or

   b. for the means, methods, techniques, sequences, or procedures of construction, or the safety precautions and programs incident thereto, or

   c. for Contractor's failure to comply with Laws and Regulations applicable to Contractor's performance of the Work, or

   d. to make any examination to ascertain how or for what purposes Contractor has used the moneys paid on account of the Contract Price, or

   e. to determine that title to any of the Work, materials, or equipment has passed to Owner free and clear of any Liens.

5. Engineer may refuse to recommend the whole or any part of any payment if, in Engineer's opinion, it would be incorrect to make the representations to Owner stated in Paragraph 14.02.B.2. Engineer may also refuse to recommend any such payment or, because of subsequently discovered evidence or the results of subsequent inspections or tests, revise or revoke any such payment recommendation previously made, to such extent as may be necessary in Engineer's opinion to protect Owner from loss because:

   a. the Work is defective, or completed Work has been damaged, requiring correction or replacement;

   b. the Contract Price has been reduced by Change Orders;

   c. Owner has been required to correct defective Work or complete Work in accordance with Paragraph 13.09; or

   d. Engineer has actual knowledge of the occurrence of any of the events enumerated in Paragraph 15.02.A.

C. *Payment Becomes Due:*

1. Ten days after presentation of the Application for Payment to Owner with Engineer's recommendation, the amount recommended will (subject to the provisions of Paragraph 14.02.D) become due, and when due will be paid by Owner to Contractor.

Copyright © 2007 National Society of Professional Engineers for EJCDC. All rights reserved.

D. *Reduction in Payment:*

1. Owner may refuse to make payment of the full amount recommended by Engineer because:

   a. claims have been made against Owner on account of Contractor's performance or furnishing of the Work;

   b. Liens have been filed in connection with the Work, except where Contractor has delivered a specific bond satisfactory to Owner to secure the satisfaction and discharge of such Liens;

   c. there are other items entitling Owner to a set-off against the amount recommended; or

   d. Owner has actual knowledge of the occurrence of any of the events enumerated in Paragraphs 14.02.B.5.a through 14.02.B.5.c or Paragraph 15.02.A.

2. If Owner refuses to make payment of the full amount recommended by Engineer, Owner will give Contractor immediate written notice (with a copy to Engineer) stating the reasons for such action and promptly pay Contractor any amount remaining after deduction of the amount so withheld. Owner shall promptly pay Contractor the amount so withheld, or any adjustment thereto agreed to by Owner and Contractor, when Contractor remedies the reasons for such action.

3. Upon a subsequent determination that Owner's refusal of payment was not justified, the amount wrongfully withheld shall be treated as an amount due as determined by Paragraph 14.02.C.1 and subject to interest as provided in the Agreement.

14.03 *Contractor's Warranty of Title*

A. Contractor warrants and guarantees that title to all Work, materials, and equipment covered by any Application for Payment, whether incorporated in the Project or not, will pass to Owner no later than the time of payment free and clear of all Liens.

14.04 *Substantial Completion*

A. When Contractor considers the entire Work ready for its intended use Contractor shall notify Owner and Engineer in writing that the entire Work is substantially complete (except for items specifically listed by Contractor as incomplete) and request that Engineer issue a certificate of Substantial Completion.

B. Promptly after Contractor's notification, Owner, Contractor, and Engineer shall make an inspection of the Work to determine the status of completion. If Engineer does not consider the Work substantially complete, Engineer will notify Contractor in writing giving the reasons therefor.

C. If Engineer considers the Work substantially complete, Engineer will deliver to Owner a tentative certificate of Substantial Completion which shall fix the date of Substantial Completion. There shall be attached to the certificate a tentative list of items to be completed or corrected before

Copyright © 2007 National Society of Professional Engineers for EJCDC. All rights reserved.

final payment. Owner shall have seven days after receipt of the tentative certificate during which to make written objection to Engineer as to any provisions of the certificate or attached list. If, after considering such objections, Engineer concludes that the Work is not substantially complete, Engineer will, within 14 days after submission of the tentative certificate to Owner, notify Contractor in writing, stating the reasons therefor. If, after consideration of Owner's objections, Engineer considers the Work substantially complete, Engineer will, within said 14 days, execute and deliver to Owner and Contractor a definitive certificate of Substantial Completion (with a revised tentative list of items to be completed or corrected) reflecting such changes from the tentative certificate as Engineer believes justified after consideration of any objections from Owner.

D. At the time of delivery of the tentative certificate of Substantial Completion, Engineer will deliver to Owner and Contractor a written recommendation as to division of responsibilities pending final payment between Owner and Contractor with respect to security, operation, safety, and protection of the Work, maintenance, heat, utilities, insurance, and warranties and guarantees. Unless Owner and Contractor agree otherwise in writing and so inform Engineer in writing prior to Engineer's issuing the definitive certificate of Substantial Completion, Engineer's aforesaid recommendation will be binding on Owner and Contractor until final payment.

E. Owner shall have the right to exclude Contractor from the Site after the date of Substantial Completion subject to allowing Contractor reasonable access to remove its property and complete or correct items on the tentative list.

14.05 *Partial Utilization*

A. Prior to Substantial Completion of all the Work, Owner may use or occupy any substantially completed part of the Work which has specifically been identified in the Contract Documents, or which Owner, Engineer, and Contractor agree constitutes a separately functioning and usable part of the Work that can be used by Owner for its intended purpose without significant interference with Contractor's performance of the remainder of the Work, subject to the following conditions:

1. Owner at any time may request Contractor in writing to permit Owner to use or occupy any such part of the Work which Owner believes to be ready for its intended use and substantially complete. If and when Contractor agrees that such part of the Work is substantially complete, Contractor, Owner, and Engineer will follow the procedures of Paragraph 14.04.A through D for that part of the Work.

2. Contractor at any time may notify Owner and Engineer in writing that Contractor considers any such part of the Work ready for its intended use and substantially complete and request Engineer to issue a certificate of Substantial Completion for that part of the Work.

3. Within a reasonable time after either such request, Owner, Contractor, and Engineer shall make an inspection of that part of the Work to determine its status of completion. If Engineer does not consider that part of the Work to be substantially complete, Engineer will notify Owner and Contractor in writing giving the reasons therefor. If Engineer considers that part of the Work to be substantially complete, the provisions of Paragraph 14.04 will apply with respect to certification of Substantial Completion of that part of the Work and the division of responsibility in respect thereof and access thereto.

Copyright © 2007 National Society of Professional Engineers for EJCDC. All rights reserved.

4. No use or occupancy or separate operation of part of the Work may occur prior to compliance with the requirements of Paragraph 5.10 regarding property insurance.

14.06 *Final Inspection*

A. Upon written notice from Contractor that the entire Work or an agreed portion thereof is complete, Engineer will promptly make a final inspection with Owner and Contractor and will notify Contractor in writing of all particulars in which this inspection reveals that the Work is incomplete or defective. Contractor shall immediately take such measures as are necessary to complete such Work or remedy such deficiencies.

14.07 *Final Payment*

A. *Application for Payment:*

1. After Contractor has, in the opinion of Engineer, satisfactorily completed all corrections identified during the final inspection and has delivered, in accordance with the Contract Documents, all maintenance and operating instructions, schedules, guarantees, bonds, certificates or other evidence of insurance, certificates of inspection, marked-up record documents (as provided in Paragraph 6.12), and other documents, Contractor may make application for final payment following the procedure for progress payments.

2. The final Application for Payment shall be accompanied (except as previously delivered) by:

   a. all documentation called for in the Contract Documents, including but not limited to the evidence of insurance required by Paragraph 5.04.B.6;

   b. consent of the surety, if any, to final payment;

   c. a list of all Claims against Owner that Contractor believes are unsettled; and

   d. complete and legally effective releases or waivers (satisfactory to Owner) of all Lien rights arising out of or Liens filed in connection with the Work.

3. In lieu of the releases or waivers of Liens specified in Paragraph 14.07.A.2 and as approved by Owner, Contractor may furnish receipts or releases in full and an affidavit of Contractor that: (i) the releases and receipts include all labor, services, material, and equipment for which a Lien could be filed; and (ii) all payrolls, material and equipment bills, and other indebtedness connected with the Work for which Owner might in any way be responsible, or which might in any way result in liens or other burdens on Owner's property, have been paid or otherwise satisfied. If any Subcontractor or Supplier fails to furnish such a release or receipt in full, Contractor may furnish a bond or other collateral satisfactory to Owner to indemnify Owner against any Lien.

B. *Engineer's Review of Application and Acceptance:*

1. If, on the basis of Engineer's observation of the Work during construction and final inspection, and Engineer's review of the final Application for Payment and accompanying

Copyright © 2007 National Society of Professional Engineers for EJCDC. All rights reserved.

documentation as required by the Contract Documents, Engineer is satisfied that the Work has been completed and Contractor's other obligations under the Contract Documents have been fulfilled, Engineer will, within ten days after receipt of the final Application for Payment, indicate in writing Engineer's recommendation of payment and present the Application for Payment to Owner for payment. At the same time Engineer will also give written notice to Owner and Contractor that the Work is acceptable subject to the provisions of Paragraph 14.09. Otherwise, Engineer will return the Application for Payment to Contractor, indicating in writing the reasons for refusing to recommend final payment, in which case Contractor shall make the necessary corrections and resubmit the Application for Payment.

C. *Payment Becomes Due:*

1. Thirty days after the presentation to Owner of the Application for Payment and accompanying documentation, the amount recommended by Engineer, less any sum Owner is entitled to set off against Engineer's recommendation, including but not limited to liquidated damages, will become due and will be paid by Owner to Contractor.

14.08 *Final Completion Delayed*

A. If, through no fault of Contractor, final completion of the Work is significantly delayed, and if Engineer so confirms, Owner shall, upon receipt of Contractor's final Application for Payment (for Work fully completed and accepted) and recommendation of Engineer, and without terminating the Contract, make payment of the balance due for that portion of the Work fully completed and accepted. If the remaining balance to be held by Owner for Work not fully completed or corrected is less than the retainage stipulated in the Agreement, and if bonds have been furnished as required in Paragraph 5.01, the written consent of the surety to the payment of the balance due for that portion of the Work fully completed and accepted shall be submitted by Contractor to Engineer with the Application for such payment. Such payment shall be made under the terms and conditions governing final payment, except that it shall not constitute a waiver of Claims.

14.09 *Waiver of Claims*

A. The making and acceptance of final payment will constitute:

1. a waiver of all Claims by Owner against Contractor, except Claims arising from unsettled Liens, from defective Work appearing after final inspection pursuant to Paragraph 14.06, from failure to comply with the Contract Documents or the terms of any special guarantees specified therein, or from Contractor's continuing obligations under the Contract Documents; and

2. a waiver of all Claims by Contractor against Owner other than those previously made in accordance with the requirements herein and expressly acknowledged by Owner in writing as still unsettled.

Copyright © 2007 National Society of Professional Engineers for EJCDC. All rights reserved.

ARTICLE 15 – SUSPENSION OF WORK AND TERMINATION

15.01 *Owner May Suspend Work*

A. At any time and without cause, Owner may suspend the Work or any portion thereof for a period of not more than 90 consecutive days by notice in writing to Contractor and Engineer which will fix the date on which Work will be resumed. Contractor shall resume the Work on the date so fixed. Contractor shall be granted an adjustment in the Contract Price or an extension of the Contract Times, or both, directly attributable to any such suspension if Contractor makes a Claim therefor as provided in Paragraph 10.05.

15.02 *Owner May Terminate for Cause*

A. The occurrence of any one or more of the following events will justify termination for cause:

1. Contractor's persistent failure to perform the Work in accordance with the Contract Documents (including, but not limited to, failure to supply sufficient skilled workers or suitable materials or equipment or failure to adhere to the Progress Schedule established under Paragraph 2.07 as adjusted from time to time pursuant to Paragraph 6.04);

2. Contractor's disregard of Laws or Regulations of any public body having jurisdiction;

3. Contractor's repeated disregard of the authority of Engineer; or

4. Contractor's violation in any substantial way of any provisions of the Contract Documents.

B. If one or more of the events identified in Paragraph 15.02.A occur, Owner may, after giving Contractor (and surety) seven days written notice of its intent to terminate the services of Contractor:

1. exclude Contractor from the Site, and take possession of the Work and of all Contractor's tools, appliances, construction equipment, and machinery at the Site, and use the same to the full extent they could be used by Contractor (without liability to Contractor for trespass or conversion);

2. incorporate in the Work all materials and equipment stored at the Site or for which Owner has paid Contractor but which are stored elsewhere; and

3. complete the Work as Owner may deem expedient.

C. If Owner proceeds as provided in Paragraph 15.02.B, Contractor shall not be entitled to receive any further payment until the Work is completed. If the unpaid balance of the Contract Price exceeds all claims, costs, losses, and damages (including but not limited to all fees and charges of engineers, architects, attorneys, and other professionals and all court or arbitration or other dispute resolution costs) sustained by Owner arising out of or relating to completing the Work, such excess will be paid to Contractor. If such claims, costs, losses, and damages exceed such unpaid balance, Contractor shall pay the difference to Owner. Such claims, costs, losses, and damages incurred by Owner will be reviewed by Engineer as to their reasonableness and, when

Copyright © 2007 National Society of Professional Engineers for EJCDC. All rights reserved.

so approved by Engineer, incorporated in a Change Order. When exercising any rights or remedies under this Paragraph, Owner shall not be required to obtain the lowest price for the Work performed.

D. Notwithstanding Paragraphs 15.02.B and 15.02.C, Contractor's services will not be terminated if Contractor begins within seven days of receipt of notice of intent to terminate to correct its failure to perform and proceeds diligently to cure such failure within no more than 30 days of receipt of said notice.

E. Where Contractor's services have been so terminated by Owner, the termination will not affect any rights or remedies of Owner against Contractor then existing or which may thereafter accrue. Any retention or payment of moneys due Contractor by Owner will not release Contractor from liability.

F. If and to the extent that Contractor has provided a performance bond under the provisions of Paragraph 5.01.A, the termination procedures of that bond shall supersede the provisions of Paragraphs 15.02.B and 15.02.C.

15.03 *Owner May Terminate For Convenience*

A. Upon seven days written notice to Contractor and Engineer, Owner may, without cause and without prejudice to any other right or remedy of Owner, terminate the Contract. In such case, Contractor shall be paid for (without duplication of any items):

1. completed and acceptable Work executed in accordance with the Contract Documents prior to the effective date of termination, including fair and reasonable sums for overhead and profit on such Work;

2. expenses sustained prior to the effective date of termination in performing services and furnishing labor, materials, or equipment as required by the Contract Documents in connection with uncompleted Work, plus fair and reasonable sums for overhead and profit on such expenses;

3. all claims, costs, losses, and damages (including but not limited to all fees and charges of engineers, architects, attorneys, and other professionals and all court or arbitration or other dispute resolution costs) incurred in settlement of terminated contracts with Subcontractors, Suppliers, and others; and

4. reasonable expenses directly attributable to termination.

B. Contractor shall not be paid on account of loss of anticipated profits or revenue or other economic loss arising out of or resulting from such termination.

15.04 *Contractor May Stop Work or Terminate*

A. If, through no act or fault of Contractor, (i) the Work is suspended for more than 90 consecutive days by Owner or under an order of court or other public authority, or (ii) Engineer fails to act on any Application for Payment within 30 days after it is submitted, or (iii) Owner fails for 30 days

Copyright © 2007 National Society of Professional Engineers for EJCDC. All rights reserved.

to pay Contractor any sum finally determined to be due, then Contractor may, upon seven days written notice to Owner and Engineer, and provided Owner or Engineer do not remedy such suspension or failure within that time, terminate the Contract and recover from Owner payment on the same terms as provided in Paragraph 15.03.

B. In lieu of terminating the Contract and without prejudice to any other right or remedy, if Engineer has failed to act on an Application for Payment within 30 days after it is submitted, or Owner has failed for 30 days to pay Contractor any sum finally determined to be due, Contractor may, seven days after written notice to Owner and Engineer, stop the Work until payment is made of all such amounts due Contractor, including interest thereon. The provisions of this Paragraph 15.04 are not intended to preclude Contractor from making a Claim under Paragraph 10.05 for an adjustment in Contract Price or Contract Times or otherwise for expenses or damage directly attributable to Contractor's stopping the Work as permitted by this Paragraph.

ARTICLE 16 – DISPUTE RESOLUTION

16.01 *Methods and Procedures*

A. Either Owner or Contractor may request mediation of any Claim submitted to Engineer for a decision under Paragraph 10.05 before such decision becomes final and binding. The mediation will be governed by the Construction Industry Mediation Rules of the American Arbitration Association in effect as of the Effective Date of the Agreement. The request for mediation shall be submitted in writing to the American Arbitration Association and the other party to the Contract. Timely submission of the request shall stay the effect of Paragraph 10.05.E.

B. Owner and Contractor shall participate in the mediation process in good faith. The process shall be concluded within 60 days of filing of the request. The date of termination of the mediation shall be determined by application of the mediation rules referenced above.

C. If the Claim is not resolved by mediation, Engineer's action under Paragraph 10.05.C or a denial pursuant to Paragraphs 10.05.C.3 or 10.05.D shall become final and binding 30 days after termination of the mediation unless, within that time period, Owner or Contractor:

1. elects in writing to invoke any dispute resolution process provided for in the Supplementary Conditions; or

2. agrees with the other party to submit the Claim to another dispute resolution process; or

3. gives written notice to the other party of the intent to submit the Claim to a court of competent jurisdiction.

ARTICLE 17 – MISCELLANEOUS

17.01 *Giving Notice*

A. Whenever any provision of the Contract Documents requires the giving of written notice, it will be deemed to have been validly given if:

Copyright © 2007 National Society of Professional Engineers for EJCDC. All rights reserved.

1. delivered in person to the individual or to a member of the firm or to an officer of the corporation for whom it is intended; or

2. delivered at or sent by registered or certified mail, postage prepaid, to the last business address known to the giver of the notice.

17.02 *Computation of Times*

A. When any period of time is referred to in the Contract Documents by days, it will be computed to exclude the first and include the last day of such period. If the last day of any such period falls on a Saturday or Sunday or on a day made a legal holiday by the law of the applicable jurisdiction, such day will be omitted from the computation.

17.03 *Cumulative Remedies*

A. The duties and obligations imposed by these General Conditions and the rights and remedies available hereunder to the parties hereto are in addition to, and are not to be construed in any way as a limitation of, any rights and remedies available to any or all of them which are otherwise imposed or available by Laws or Regulations, by special warranty or guarantee, or by other provisions of the Contract Documents. The provisions of this Paragraph will be as effective as if repeated specifically in the Contract Documents in connection with each particular duty, obligation, right, and remedy to which they apply.

17.04 *Survival of Obligations*

A. All representations, indemnifications, warranties, and guarantees made in, required by, or given in accordance with the Contract Documents, as well as all continuing obligations indicated in the Contract Documents, will survive final payment, completion, and acceptance of the Work or termination or completion of the Contract or termination of the services of Contractor.

17.05 *Controlling Law*

A. This Contract is to be governed by the law of the state in which the Project is located.

17.06 *Headings*

A. Article and paragraph headings are inserted for convenience only and do not constitute parts of these General Conditions.

Copyright © 2007 National Society of Professional Engineers for EJCDC. All rights reserved.

SECTION 4
SUPPLEMENTARY CONDITIONS

SUPPLEMENTARY CONDITIONS

These Supplementary Conditions amend or supplement the Standard General Conditions of the Construction Contract (EJCDC C-700, 2007 ed.) and other provisions of the Contract Documents as indicated below. All provisions which are not so amended or supplemented herein or in the Specific Project Requirements remain in full force and effect.

SC-1.01 The terms used in these Supplementary Conditions which are defined in the General Conditions have the meaning assigned to them in the General Conditions.

SC-2.02 Delete paragraph 2.02A in its entirety and insert the following in its place:

Owner shall furnish one (1) printed/hard copy of the drawings and Project Manual which shall be an executed contract set and one set in electronic format (.pdf), if requested.

SC-2.03 In the last sentence of 2.03A, change "sixtieth day" to "ninetieth day."

SC-4.02(A) Change "Supplementary Conditions" to read "Specific Project Requirements."

SC-5.03(A)(1) The required Certificate of Insurance shall be in a form satisfactory to the Owner (most current version of ACORD 25 or approved equal). If the Contractor fails to procure and maintain any specified and/or required insurance, the Owner shall have the right to procure and maintain the said insurance for and in the name of the Contractor and the Contractor shall pay the cost thereof and shall furnish all necessary information to make effective and maintain such insurance.

SC-5.04(B)(1) Change "Supplementary Conditions" to read "Specific Project Requirements."

SC-5.04(B)(2) The limits of liability for the insurance required by paragraph 5.04(A) of the General Conditions shall provide coverage for not less than the following amounts or greater where required by Laws and Regulations:

5.04(A)(1) and (2) Workers' Compensation, etc., under paragraphs 5.04(A)(1) and 5.04(A)(2) of the General Conditions:

(a)	State	Statutory
(b)	Applicable Federal (e.g., Longshoreman's):	Statutory
(c)	Employer's Liability:	$1,000,000

5.04(A)(3), (4) and (5). Contractor's Liability Insurance under paragraphs 5.04(A)(3) through 5.04(A)(5) of the General Conditions which shall also include completed operations and product liability coverage.

(a) Bodily Injury and Property Damage, Combined Single Limit (CSL) (Except Products and Completed Operations) Property Damage liability

insurance will provide Explosion, Collapse, and Underground coverage where applicable.

Each Occurrence	$2,000,000*
General Aggregate	$4,000,000*

(b) Products and Completed Operations Aggregate $1,000,000

Products and Completed Operations to be maintained for two (2) years after final payment and Contractor shall continue to provide evidence of such coverage to the Owner on an annual basis during the aforementioned period.

(c) Personal and Advertising Injury (Per Person/Organization and per occurrence) with Employment Exclusion deleted. $1,000,000

(d) Fire Damage $100,000

(e) *Umbrella Excess Liability – As needed to increase primary policy to required limits.

(f) If the General Liability Policy includes a General Aggregate, such policy shall be endorsed to have General Aggregate apply <u>to this project only</u> (Per Project Aggregate Limit).

5.04(A)(6) Automobile Liability - (Owned, Non-Owned, Hired)
Contractor may provide split limits or combined single limit.

(a) Split Limits:

Bodily Injury,	Each Person:	$2,000,000
	Each Occurrence	$2,000,000
Property Damage,	Each Occurrence	$1,000,000

or

(b) Combined Single Limit

Bodily Injury and Property Damage,	Each Occurrence	$2,000,000

(c) Umbrella Excess Liability – as needed to increase Primary Policy to specified limits.

SC-5.04(B)(3) Add the following to the end of the paragraph: “to the extent available in the insurance industry with industry standard exclusions and as allowed under the laws and regulations in the State of Ohio;”

SC-5.04(B)(4) Add the following:

Written notice of cancellation for non-payment of premium shall be at least 10 days.

Add the following paragraphs:

SC-5.04(C) Unless otherwise stated in Specific Project Requirements, the Contractor shall purchase and provide an "Owner's and Contractor's Protective Policy" with the Owner listed as the insured for the following limits:

Each Occurrence	$1,000,000
General Aggregate	$2,000,000

SC-5.04(D) Unless otherwise stated in Specific Project Requirements the Contractor shall purchase and maintain during the Contract Time "All Risk Builders' Risk Insurance," and/or "Installation Floater Insurance," and/or "Boiler and Machinery Insurance," and any and all insurance requirements of section GC-5.06 of the General Conditions as applicable for the type of work to be performed upon the Project to the full insurable value thereof for the benefit of the Owner, the Contractor, Subcontractors and Suppliers as their interest may appear. This insurance shall cover the work until final acceptance and final payment by the Owner. This provision shall in no way release the Contractor or Contractor's Surety from obligations under the Contract Documents to fully complete the Project. The original policy(s) shall be filed with the Owner or his designated representative.

SC-5.05 *Owner’s Liability Insurance*

See SC-5.04(C) above.

SC-5.06 *Property Insurance*

Unless otherwise stated in Specific Project Requirements the Contractor, not the Owner, shall purchase and maintain during the Contract Time all property insurance required in section GC-5.06 of the General Conditions and as outlined in SC-5.04(D) above.

SC-6.02(C) Add the following Paragraph:

The Contractor shall be responsible for the Owner and/or Engineer's additional inspection and administrative costs for work performed beyond regular working hours as defined in this Section.

SC-6.10(B) Add the following:

Should the Owner be exempt from Ohio State Sales and Use Taxes on materials and equipment to be incorporated in the Project, the Contractor may obtain a waiver and said taxes shall not be included in the Contract Price.

1. Owner will furnish the required certificates of tax exemption to Contractor for use in the purchase of supplies and materials to be incorporated into the work
2. Owner's exemption to Contractor does not apply to construction tools, machinery, equipment, or other property by or leased by Contractor, or to supplies or materials not incorporated into the work.

The Contractor shall withhold and/or pay all consumer, use, property, employment, income and other taxes in accordance with the laws and regulations of the United States, State of Ohio and Owner which are applicable during the performance of the work.

SC 6.17 *Shop Drawings and Samples*

Add the following new paragraphs immediately after paragraph 6.17E:

F. Contractor shall furnish required submittals with sufficient information and accuracy in order to obtain required approval of an item with no more than three (3) submittals. Engineer will record Engineer's time for reviewing subsequent materials of shop drawings, samples, or other items requiring approval and Contractor shall reimburse Owner for Engineer's charges for such time.

G. In the event that Contractor requests a substitution for a previously approved item, Contractor shall reimburse Owner for Engineer's charges for such time unless the need for such substitution is beyond the control of the Contractor.

SC-7.02 Delete Section 7.02 of the General Conditions in its entirety and insert the following:

SC-7.02(A) The General Construction Contractor shall be referred to and defined as the Construction Coordinator.

SC-7.02(B) Duties of the Construction Coordinator include the following:

1. Scheduling and coordinating the work of the Prime Contractors including submission and periodic updating of project schedule.

2. Establishing and administrating the site safety program and procedures for the project.

3. See that permits are applied for and obtained on a timely basis. Advise

the Engineer of any problems related to permit approval.

4. Monitoring compliance with Laws and Regulations.

5. Maintain project site for dust, sedimentation, debris, waste, and general site cleanliness.

6. Coordinate location and use of temporary construction facilities including but not limited to sanitary, water, power, telephone, and parking.

7. Coordinate Owner interface for utility tie-ins/shut downs.

8. Monitor shop drawing submittal and coordination of submittal information between Prime Contractors.

SC-11.01(A) For purposes of "Cost of the Work" delete Section 11.01(A), (B), and (C) of the General Conditions in their entirety and insert ODOT 109.05, current edition in its place.

SC-13.07 (A) In the First sentence of Section 13.07(A) remove "Substantial Completion" and insert "Final Acceptance of the entire project and final payment by the Owner."

SC-13.07(C) Remove 13.07(C) and replace with the following:

All materials and equipment shall be warranted by the respective material supplier or equipment manufacturer until the end of the Contractor's "correction period" (or longer if specified elsewhere in the contract) regardless of date of initial installation or operation of the material or equipment. The cost of such extended warranties as needed from material suppliers or equipment manufacturers to provide warranty coverage until the end of the "correction period" or other period as specified in the contract shall be the responsibility of the prime contractor and shall be assumed to have been included in his bid.

SC-14.02 (A) (3) Delete Section 14.02(A) (3) of the General Conditions in its entirety and insert the following:

Until the job is 50% complete, the Contractor will be paid 92% of the estimated value of labor and material completed in acceptable form. After the work is 50% complete, no further funds shall be retained and the Contractor shall be paid 100% of the estimated value of labor and material completed in acceptable form, provided that the Contractor is making satisfactory progress and there is no specific cause for greater withholding. Upon the Owner’s agreement that the project is substantially complete, the Retainage may be reduced to twice the value of the remaining punch list work subject to the recommendation of the Engineer and the approval by the Owner.

SC-14.02(A) (4) Add the following paragraph:

Payment for stored materials at invoice prices or at the unit price bid for materials, or the lesser value of the two, will be made for accepted nonperishable equipment and materials which are to be incorporated into the work, when accepted, delivered, properly stored, and protected upon the site and verified to the Engineer by a copy of the invoice. For materials and equipment meeting the foregoing conditions, the Owner will pay, when properly included in an approved estimate, 92% of the invoice value of the same. Subsequent to the inclusion of a payment for delivered materials in a progress payment, Contractor shall submit no later than the next payment submission, a partial waiver of lien from each and every supplier for whom delivered materials were paid. If no such waiver is submitted prior to or along with the next payment, the amount of delivered materials paid commensurate with that particular item will be deducted from future payments. No payment for delivered materials shall be made for any items that are scheduled to be incorporated in the work within 30 days of submission of the pay estimate. Delivered materials will not be paid in any given month for a total amount less than $5,000.00. Payment for delivered materials for such items as pipe backfill and roadway subbase will not be routinely considered.

SC-16.01 Delete Article 16 in its entirety and replace with the following:

ARTICLE 16 - DISPUTE RESOLUTION AGREEMENT - JUDICIAL SYSTEM

OWNER and CONTRACTOR hereby agree that Article 16 of the General Conditions to the Agreement between OWNER and CONTRACTOR is amended to include the following agreement of the parties:

16.01 All claims, disputes and other matters in question between Owner and Contractor arising out of or relating to the Contract Documents or the breach thereof (except for claims which have been waived by the making or acceptance of final payment as provided by Paragraph 14.09) will be decided through the Lake County Court of Common Pleas. Arbitration will be entered into only if agreed upon in writing by both parties.

SECTION 5
SPECIFICATIONS

SECTION 01010 – SUMMARY OF WORK

PART 1 – GENERAL

1.1 LOCATION OF THE PROJECT

A. The project work is located between vacant property at the southwest corner of Tin Man Rd. cul-de-sac and 9050 Tyler Blvd. in Mentor, Ohio. Refer to the location map for exact location.

1.2 PROJECT DESCRIPTION

A. The project will consist of the installation of 1,355 LF of 8” ductile iron pipe waterline as shown in the construction drawings.

B. Completion and Work Dates – Substantial completion of the project shall be performed by February 28, 2017. Final restoration of the project shall be completed by March 15, 2017.

C. Prevailing Wage – Prevailing wage requirements shall apply to all work.

D. Materials Testing – All aggregate base and all concrete provided by the awarded Contractor shall have quality control testing per Specification 01038.

1.3 SPECIFICATIONS

A. In general, these Specifications describe the work to be performed by the various trades, other than work specifically excluded. It shall be the responsibility of Contractors and Subcontractors to perform all work incidental to their trade, whether or not specific mention is made of each item, unless such incidentals are included under another Item.

B. It is advised that all Contractors and Subcontractors familiarize themselves with the contents of the complete Specifications, particularly for the trades preceding, following, related or adjacent to their work.

1.4 OPINION OF PROBABLE CONSTRUCTION COST

A. Engineer’s Estimate: $115,000.00

1.5 DRAWING SCHEDULE

A. Details of the work to be done under this contract are shown in the drawings in Section 9.

END OF SECTION 01010 (07/06/16)

SECTION 01020 - GENERAL REGULATIONS AND PERMITS

PART 1 - GENERAL

1.1 REGISTRATION

The Prime Contractor(s) shall be registered with the Owner's Building Department. Registration shall include completing required forms, providing a certificate of liability insurance, and a One Hundred Dollar ($100.00) registration fee.

If the Contractor performs any work within the municipal limits outside the performance of this contract, he shall provide a separate Ten Thousand Dollar ($10,000.00) registration bond.

If the contractor performs work only within this contract, he may submit the Contract Performance Bond in lieu of a Ten Thousand Dollar ($10,000.00) registration bond.

1.2 PERMITS

The Contractor will not have to obtain permits for any of the properties for work directed by the City.

1.3 ARCHAEOLOGICAL DISCOVERIES

Contractors and subcontractors are required under O.R.C. Section 149.53, to notify the Ohio Historical Society and the Ohio Historic Site Preservation Board of Archaeological Discoveries located in the project area, and to cooperate with those entities in archaeological and historic surveys and salvage efforts if such discoveries are uncovered within the project area.

Contact: Mark Epstein, Department Head
Resource Protection and Review
Ohio Historic Preservation Office
800 E. 17th Avenue
Columbus, Ohio 43211-2474

Should archaeological discoveries or other activities delay progress of the work, an adjustment in contract time will be made.

END OF SECTION 01020 (10/05/15)

SECTION 01021 - INDUSTRY STANDARDS

PART 1 - GENERAL

1.1 ABBREVIATIONS

A. Abbreviations, as used, designate the following:

AASHTO	-	American Association of State Highway and Transportation Officials
ACI	-	American Concrete Institute
AIEE	-	American Institute of Electrical Engineers
AISC	-	American Institute of Steel Construction
ANSI	-	American National Standards Institute
ASTM	-	American Society of Testing and Materials
AWWA	-	American Water Works Association
CMS	-	Construction and Material Specifications
NEMA	-	National Electrical Manufacturers Association
ODOT	-	Ohio Department of Transportation
ORC	-	Ohio Revised Code
UL	-	Underwriters Laboratories, Inc.

1.2 REFERENCE TO OTHER SPECIFICATIONS

A. Where reference is made to specifications such as ASTM, AWWA or AASHTO, the latest edition shall be used, unless otherwise noted on the plans or in the specifications.

1.3 CODES AND STANDARDS

A. All work provided for by these specifications must be installed according to the provisions of the State and local building codes, subject to inspection and acceptance by the State and local inspectors.

END OF SECTION 01021 (10/93)

SECTION 01032 - PROJECT MEETINGS

PART 1 - GENERAL

1.1 PRECONSTRUCTION MEETING

A. Prior to the Contractor beginning any work on the project, the Owner will schedule and hold a preconstruction meeting to discuss all aspects of the contract work.

B. The Contractor shall be present and be prepared to comment in detail on all aspects of his work.

C. The Contractor shall bring to the preconstruction meeting a proposed construction progress schedule, erosion control plan, quality control program, concrete mix designs, designation of responsible personnel, submittal of shop drawings and product data, etc. Approval of each by the Engineer is required prior to the start of any work.

D. Included in the construction progress schedule shall be an implementation sequence of the proposed erosion control efforts required by the contract.

END OF SECTION 01032 (07/06/16)

SECTION 01034 - CONTRACTOR'S USE OF SITE

PART 1 - GENERAL

1.1 GENERAL

A. The Contractor will be allowed the use of as much of the site designated for the improvements as is necessary for his operation.

1.2 USE OF STREETS

A. During the progress of the work, the Contractor shall make ample provisions for both vehicle and pedestrian traffic on any public street and shall indemnify and save harmless the Owner from any expense whatsoever due to his operations over said streets. The Contractor shall also provide free access to all the fire hydrants, water, and gas valves located along the line of his work. Gutters and waterways must be kept open or other provisions made for the removal of storm water.

B. In the event of the Contractor's failure to comply with these provisions, the Owner may cause the same to be done, and may deduct the cost of such work from any monies due the Contractor under this Agreement, but the performance of such work by the Owner at its instance shall serve in no way to release the Contractor from his general or particular liability for the safety of the public or the work.

C. The Contractor shall repair at no cost to the Owner, all existing roads, parking areas, grassed areas that are damaged due to the execution of his work. The Contractor shall remove daily all mud, soil and debris that may be tracked onto existing streets, drives, or walks by his equipment or that of subcontractors or suppliers.

1.3 RIGHTS-OF-WAY

D. Whenever it is required to perform work within the limits of public or private property or in rights-of-way, such work shall be done in conformity with all agreements between the Owner and the owners of such. Care shall be taken to avoid injury to the premises entered, which premises shall be left in a neat and orderly condition by the removal of rubbish and the grading of surplus materials, and the restoration of said public or private property to the same general conditions as pertained at the time of entry for work to be performed under this contract.

E. The Contractor shall not (except after consent from the proper parties) enter or occupy with men, tools or equipment, any land outside the rights-of-way or property where the waterline improvement will be constructed.

F. When the Contractor performs construction within 10 ft. of a right-of-way or easement line, he shall place tall stakes properly identified at points of change in width or direction of the right-of-way or easement line and at points along the line so that at least two stakes can be seen distinctly from any point on the line.

1.4 PROTECTING EXISTING BUILDINGS, STRUCTURES AND ROADWAYS

A. The Contractor shall, at his own expense, shore up and protect any buildings, roadways, utilities or other public or private structures which may be encountered or endangered in the prosecution of the work, and that may not be otherwise provided for, and he shall repair and make good any damages caused to any such property by reason of his operations. All existing fences removed due to the prosecution of the work shall be replaced by the Contractor. No extra payment will be made for said work or material, but the cost of this work must be included in the price stipulated for the work to be done under this contract.

1.5 SITE FACILITIES

A. The Contractor shall furnish and place sufficient quantities of portable toilet facilities at locations convenient for use by the Contractor's personnel, Subcontractors, the Engineer, and the Owner.

1.6 RESTORATION

A. On all contract items that require and include surface restoration including repairs to driveways and roads outside trench limits, an amount equal to 10% of the unit price bid for sewer and/or waterline items will be considered the value of this work.

B. As work is completed the payment for each contract item will be reduced by the 10% until full performance of all contract requirements.

C. Partial release of the 10% restoration money may be made by the Engineer commensurate with his determination of the value of said work.

G. If in the opinion of the Engineer, the value of the restoration exceeds 10% of the contract line item, he may require a greater amount to be held but not in excess of 25%.

H. The amount held for restoration shall not be considered retainage of completed work but rather the value of work not yet performed and therefore not eligible for payment.

I. On lump sum items or contracts, the value of the restoration work will be determined by the approved schedule of values submitted by the Contractor.

END OF SECTION 01034 (07/06/16)

SECTION 01035 - PROGRESS SCHEDULE

PART 1 - GENERAL

1.1 PROGRESS SCHEDULE

A. Immediately after signing the Contract, the General Construction Contractor shall prepare a graphic progress schedule, indicating the work to be executed during each month and the rate of expected progress to secure completion on the agreed-upon completion date. The progress schedule shall be approved by the Engineer and Owner prior to starting work on the site. Copies of such graphic progress charts, upon which has been indicated the actual progress, shall be furnished to the Engineer with each requisition for payment.

B. Should the rate of progress fall materially behind the scheduled rate of progress, and unless the delay is authorized by the Engineer, each offending Contractor shall furnish additional labor, work overtime, or take other necessary means required for completion of the work on the scheduled date. No additional compensation beyond the set Contract price shall be paid for action taken or overtime expense incurred in maintaining scheduled progress.

END OF SECTION 01035 (10/98)

SECTION 01038 - SAMPLING AND TESTING

PART 1 - GENERAL

1.1 QUALITY CONTROL

A. The Contractor shall be responsible for the quality of all materials incorporated into the project work and shall be responsible for all costs of testing and certification of same.

B. The Contractor shall provide the Engineer with a Quality Control Plan in which his testing methods/procedures are defined. Said Plan shall meet with the approval of the Engineer and include identification of laboratories, types of testing, and the tentative amount and scheduling of each.

All certifications of tests and/or gradations for materials to be utilized in the work and all quality control testing shall be performed by an independent laboratory (not affiliated with, owned by, or managed by the Contractor). The laboratory shall be accredited by the AASHTO Materials Reference Laboratory for the type of testing performed.

C. The Owner may perform field Quality Assurance testing; however, such testing shall not relieve the Contractor from the responsibility of Quality Control testing or from supplying certificates from manufacturers or suppliers to demonstrate compliance with the specifications. It is intended that the testing by the Contractor and the Owner be complimentary toward a quality project; however, the Contractor may not assume the Owner will test or that any tests will be done in lieu of the Contractor's own Quality Control testing. In the same sense, the Contractor may not rely on Owner Quality Assurance testing as a basis of acceptance or approval of his work nor may any Owner performed testing be reflected in his submitted plan.

1.2 TEST CRITERIA

A. The following tests at a minimum shall be included with the Contractor’s Quality Control Plan in accordance with the specifications:

1. Aggregates

   a. For each material and/or different source, the laboratory shall perform soundness, gradation, and other tests for all parameters specified. Aggregates incorporated into concrete or asphalt mixes shall also be tested for moisture content daily.

2. Compaction Tests

   a. Compaction tests or field density tests shall be taken on all embankment, trench backfill, subgrade, and subbase materials in accordance to ODOT 203 or 02300AIA if applicable.

b. Minimum testing shall be as follows:
Embankment testing shall be at least one (1) test/5000 S.F. of each lift;
Trench backfill testing shall be at least one (1) test/50 L.F. of each lift;
Subgrade and/or subbase testing shall be at least one (1) test/200 L.F. of pavement or /5000 S.F. of slabs; subject to greater frequency due to soil conditions or Engineer's direction.

c. Proctors or relative density tests shall be performed as often as necessary for the differing soils or granular materials utilized. Proctors shall be run with a minimum of 5 points. Test reports shall show the wet (bulk) weight, dry weight, wet (bulk) density, dry density, moisture content weight and moisture content percentage. Both the dry curve and the wet curve shall be plotted.

3. Concrete Mix Design

a. For each type of concrete, the laboratory shall perform the necessary mix design providing all test data as required by the specifications.

4. Concrete Field and Laboratory Tests

a. The laboratory shall cast concrete cylinders and test beams:
   1) One set of four cylinders per 50 C.Y. with a minimum of two sets per day. The cylinders shall be broken: one at 7 days, two at 28 days, one at 56 days, unless otherwise directed by the Engineer.
   2) One beam per 50 C.Y. with a minimum of two beams per day.

b. Temperature and unit weight shall be run on fresh concrete at intervals sufficient for the type of structure being placed and a minimum of once per day. Bulk weight, bucket weight, (tare), net weight, bucket factor (bucket volume) and unit weight shall be recorded on the fresh concrete report. Show all batch weights for yield calculations. Slump and air content tests shall be taken a minimum of one test per 20 C.Y. and at least once per day.

c. All field and laboratory testing shall be performed by technicians certified by the American Concrete Institute (ACI) for the type of testing performed.

d. Initial cure of all cylinders shall be in a temperature controlled cure box or temperature controlled water tank with a hi-low thermometer. Hi-low temperature readings shall be recorded on the fresh concrete report.

5. Asphalt Mix Design

a. For each type of asphalt mix, submit job mix formula (JMF) prepared by an ODOT pre-qualified laboratory from tests performed on the aggregates proposed for use.

b. Sample and test for gradation and bitumen content as per ODOT 441.

1.3 LABORATORY REPORTS

A. Reports of laboratory and field tests will be distributed to the Engineer, Owner, and Suppliers within 24 hours of completion.

END OF SECTION 01038 (7/2008)

SECTION 01041 - PRE-CONSTRUCTION VIDEO DOCUMENTATION

PART 1 - GENERAL

1.1 SCOPE

A. Provide all labor, materials, equipment, and services, and perform all operations necessary to furnish to the Owner a complete color audio-video DVD record of the surface features within the proposed construction zone of influence, including all drive aprons. This record shall include, but not be limited to, all audio-video DVDs, storage cases, video logs, and indexes. The purpose of this coverage shall be to accurately document the pre-construction condition of these surface features.

1.2 QUALIFICATIONS

A. The video DVD documentation shall be done by a responsible commercial firm known to be skilled and regularly engaged in the business of pre-construction color audio-video DVD documentation. The firm shall furnish such information as the owner deems necessary to determine the ability of that firm to perform the work in accordance with the Contract specifications.

1.3 PRODUCTS

A. The color audio-video recording delivered to the Owner shall be in DVD format.

END OF SECTION 01041

SECTION 01042 - QUALIFICATIONS OF TRADESMEN

PART 1 - GENERAL

1.1 CHARACTER OF WORKMEN AND EQUIPMENT

A. The Contractor shall employ competent and efficient workmen for every kind of work. Any person employed on the work who shall refuse or neglect to obey directions of the Engineer or his representative, or who shall be deemed incompetent or disorderly, or who shall commit trespass upon public or private property in the vicinity of the work, shall be dismissed when the Engineer so orders, and shall not be re-employed unless express permission be given by the Engineer. The methods, equipment and appliances used on the work and the labor employed shall be such as will produce a satisfactory quality of work, and shall be adequate to complete the contract within the specified time limit.

B. In hiring of employees for the performance of work under this Contract, or any Subcontract hereunder, no Contractor or Subcontractor, nor any person acting on behalf of such Contractor or Subcontractor, shall, by reason of race, sex, creed or color, discriminate against any citizen of the State of Ohio in the work to which the employment relates. No Contractor, Subcontractor, nor any person on his behalf shall, in any manner, discriminate against or intimidate any employee hired for the performance of work under this contract on account of race, creed, sex or color.

END OF SECTION 01042 (10/93)

SECTION 01060 - SUBMITTALS

PART 1 - GENERAL

1.1 GENERAL

A. Submittals for approval of materials and equipment shall be in conformance with the requirements of the General Requirements and of the product specifications, except that the Engineer may order any additional submittal necessary to fulfill the requirements of the General Requirements.

B. Shop drawings shall provide details, dimensions, and other information that, with required certificates, will show the product is in conformance with the specifications. Details and dimensions shall be adequate for proper installation of the product.

C. Manufacturer's or supplier's certificates shall state that the products have been sampled and tested in accordance with provisions and meet the requirements of specifications included and designated herein and shall be signed by an authorized agent of the manufacturer.

D. Test certificates shall show results of tests by an independent laboratory compared to specification requirements and shall be signed by an authorized agent of the laboratory.

E. In addition to specific submittal requirements listed in the technical specifications, the Contractor shall submit, at a minimum, the following information along with other pertinent items that the Engineer requires to determine whether the equipment is capable of meeting the design criteria and specifications:

1. Catalog data
2. Design data
3. Complete list of all component parts including:

    a. Manufacturer's name and model number
    b. Material of construction
    c. Accessories
    d. Performance data

4. Fabrication drawings
5. Assembly drawings
6. Installation drawings
7. Dimension drawings
8. Wiring diagrams with alpha-numeric code for remote connections where required as shown on the Contract Drawings.

F. The Contractor shall submit a written statement from the manufacturer that the material or equipment is suitable for the intended use and will meet the requirements of the specifications.

G. The Contractor shall submit the supplier's written report that the materials or equipment:

1. Has been properly installed.
2. Is in accurate alignment.
3. Components have been tested and operated satisfactorily.

H. Where required, bid submittals in no way reduce the requirements for shop drawing submittals. Award of the Contract does not constitute approval of the equipment or material on which the Contractor's bid is based.

END OF SECTION 01060 (10/93)

SECTION 01088 – TEMPORARY TRAFFIC CONTROL DEVICES

PART 1 - GENERAL

1.1 BARRICADES, SIGNS AND LIGHTS

A. The Contractor shall employ watchmen on the work when and as necessary. The Contractor shall erect and maintain such strong and suitable barriers and such lights as will effectively prevent the occurrence of any accident to health, limb or property. Lights shall be maintained between the hours of one-half (1/2) hour after sunset and one-half (1/2) hour before sunrise.

B. No waterline excavation will be left open awaiting connection or removal at a later date by the Contractor's forces or others but shall be temporarily backfilled and resurfaced if applicable with a temporary pavement passable to traffic at no additional cost to the Owner.

C. In addition to other safety requirements, a minimum of four (4) foot high fence will be incorporated around any excavation left open at the end of a day's work.

1.2 MAINTENANCE OF TRAFFIC

A. The Contractor is required to provide maintenance of traffic in conformance with the Ohio Manual of Uniform Traffic Control Devices and Item 614 of the current Construction and Material Specifications of the Ohio Department of Transportation.

B. This work shall include providing suitable and satisfactorily trained and properly attired flagmen for use at any location where existing roadway is narrowed to a width of less than 2 full lanes (18 feet).

C. The Contractor is also responsible for maintaining local access to all residences and businesses along the route of construction and to provide whatever temporary materials are necessary to provide a safe, adequate drive surface, **including ramping of all castings and butt joints.**

D. At all boring locations, Contractor shall provide suitable flashers, barricades, and traffic control devices as may be deemed necessary by the Engineer or the responsible authority in the case of the Department of Transportation, Turnpike Commission, or Conrail. This may extend to maintain facilities on a 24 hour basis until such time as the areas are completely backfilled.

END OF SECTION 01088 (07/06/16)

SECTION 01091 - ENVIRONMENTAL PROTECTION

PART 1 - GENERAL

1.1 UNNECESSARY NOISE, DUST AND ODORS

A. The Contractor's performance of this contract shall be conducted so as to eliminate all unnecessary noise, dust and odors.

1.2 SEWAGE, SURFACE AND FLOOD FLOWS

A. The Contractor shall take whatever action is necessary to provide all necessary tools, equipment and machinery to adequately handle all sewage, surface and flood flows which may be encountered during the performance of the work. The entire cost of and liability for handling such flows is the responsibility of the Contractor and shall be included in the price for the appropriate item.

1.3 WORK IN FREEZING WEATHER

A. Written permission from the Engineer shall be obtained before any work is performed which, in the judgment of the Engineer, may be affected by frost, cold, or snow. When work is performed under such conditions, the Contractor shall provide facilities for heating the materials and for protecting the finished work.

1.4 POLLUTION CONTROL

A. It shall be the responsibility of the Contractor to prevent or limit pollution of air and water resulting from his operations.

B. The Contractor shall perform work required to prevent soil from eroding or otherwise entering onto all paved areas and into natural watercourses, ditches, and public sewer systems, and to prevent dust attributable to his operations from entering the atmosphere. This work shall conform to the requirements of the “Soil Erosion and Sedimentation Control Act, EPA 1972”, as amended.

C. Water containing suspended material, including concrete slurry, from any part of the Contractor’s operations shall be clarified before discharging to drains or streams.

D. Dust on unsurfaced streets or parking areas and any remaining dust on surfaced streets shall be controlled with calcium chloride dust palliative as directed by the Engineer.

E. The Contractor shall construct and maintain filters, sedimentation traps or stilling basins with overflows to clarify waters containing suspended materials from fill areas, excavations, deep wells, well points, and disposal sites before discharging to drains or streams.

1. Silt barriers shall be placed around stockpiles of soil or material susceptible to erosion unless temporary seeding is used instead.

F. The pollution control work shall conform to applicable portions of ODOT Items 207 and 616.

END OF SECTION 01091 (04/10)

SECTION 01099 - FINAL COMPLIANCE AND SUBMITTALS

PART 1 - GENERAL

1.1 The following forms and related sign-offs shall be documented in accordance with provisions of the contract. These forms shall be completed by the Contractor and approved by the Owner before final retainer is approved for release. Forms for Items A to E will be attached to the Contractor's executed copy of the contract.

A. Certificate of Substantial Completion (To be submitted at time of Substantial Completion).

B. Contractor's Certification of Completion.

C. Contractor's Affidavit of Prevailing Wage.

D. Consent of Surety Company for Final Payment.

E. Affidavit of Final Acceptance Date and Correction Period.

F. Certificate of insurance verifying completed operations insurance coverage.

END OF SECTION 01099 4/04

SECTION 01600
MATERIAL AND EQUIPMENT

PART 1 - GENERAL

1.01 DESCRIPTION

A. Provide materials, products and equipment for incorporation into the Work, as shown on the Drawings and as specified herein.

B. Related requirements specified elsewhere:

1. General conditions.
2. Coordination.
3. Regulatory requirements.
4. Shop drawings, product data and samples.
5. Temporary facilities.

1.02 REFERENCE TO STANDARDS

A. Whenever reference is made to the furnishing of materials or testing thereof to conform to the standards of any technical society, organization or body, it shall be construed to mean the current standard, code, specification or tentative specification adopted and published at the time of bidding; and such standards are made a part hereof, unless otherwise indicated.

B. Reference to a technical society, organization or body may be made in the Specifications by abbreviations in accordance with the following list:

AA	Aluminum Association
AASHO	American Association of State Highway Officials
ACI	American Concrete Institute
AGMA	American Gear Manufacturers Association
AIA	American Institute of Engineers
AISC	American Institute of Steel Construction
AISI	American Iron and Steel Institute
ANSI	American National Standards Institute
ASCE	American Society of Civil Engineers
ASHRAE	American Society of Heating, Refrigeration and Air Conditioning Engineers
ASME	American Society of Mechanical Engineers
ASTM	American Society of Testing and Materials
AWI	Engineerural Woodworking Institute
AWPA	American Wood Preservers Association
AWS	American Welding Society
AWWA	American Water Works Association
CGA	Compressed Gas Association
DIPRA	Ductile Iron Pipe Research Association
CSI	Construction Specifications Institute
EEI	Edison Electric Institute
EIA	Electronic Industries Association
Fed. Spec.	Federal Specifications
FS	Federal Specifications
IEEE	Institute of Electrical and Electronic Engineers
IES	Illuminating Engineering Society
IPCEA	Insulated Power Cable Engineers Association
MFMA	Maple Floor Manufacturers Association
NAAMM	National Association of Engineerural Metal Manufacturers
NBS	National Bureau of Standards
NEC	National Electrical Code

NEMA	National Electric Manufacturers Association
NFPA	National Fire Protection Association
OSHA	Occupational Safety and Health Administration
SSPC	Steel Structures Painting Council
UL	Underwriters Laboratories, Inc.

1.03 SUBMITTALS

A. Prior to the start of work, submit to the Owner a complete list of major products, in triplicate, which are proposed for installation in accordance with the Specifications.

1. Tabulate the list numerically per sections of the Specifications.

2. Include with the listing of each product:

a. Product trade name.

b. Catalog or model number.

(1) Catalog or model numbers, if given in the Contract Documents, are understood by the Engineer to be current as of the date of the Contract Documents.

(2) When ordering material or equipment, verify that the catalog or model numbers specified are current; and notify the Engineer immediately if they are not.

c. Manufacturer's name, address and telephone number.

d. Manufacturer's technical data.

1.04 PRODUCT DELIVERY, HANDLING AND STORAGE

A. Be solely responsible for the proper receiving, handling and storing of all materials furnished under the Contract from the time such materials are delivered to the site until final acceptance of the Work by the Owner.

1. Damage to any and all material upon its arrival at the site and during the construction period shall be made good by the Contractor at no additional expense to the Owner.

B. Coordinate deliveries to avoid delay in or impediment of the progress of the work of various trades.

C. Accept delivery of material only in an undamaged condition. Upon discovery, and regardless of time it is discovered, all damaged or otherwise unsuitable material must be removed immediately from the job site and replaced with suitable material as required.

D. All material for the job must be delivered to the job site and received there by the Contractor. In the case of Owner purchased materials, Contractor is responsible for receiving all material at the Owner staging site and delivery to the job site.

E. Unless otherwise specified in appropriate sections of the Specification, packaged material shall remain in original containers with labels intact and with seals unbroken until time of use. All contained material shall have readable labels for the duration of the work.

1. Protect material from damage caused by water, freezing and the effects of weather.

2. Store materials at the job site above ground in a dry place and keep weatherproof. Like material shall be stored together.

3. Do not endanger the safety of persons or materials or structures. When it is necessary to store material on or in any portion of the Project, exercise caution in loading the structure.

a. Consult the Owner on reserving space for storage in the project; but the Owner shall not be responsible for accidents or damage or structural failure due to the Contractor's negligence, nor due to the Contractor's failure to consult the Owner and seek his recommendations on material storage prior to such calamity.

PART 2 - PRODUCTS

2.01 GENERAL REQUIREMENTS

A. The intent of the Drawings and Specifications together is to include all items necessary for the completion of the Work. The Drawings and Specifications are complimentary, and what is required by one shall be as binding as if required by both. Provide all appurtenances necessary to items drawn and/or specified and which are consistent with and reasonably inferable as being necessary to produce the intended results.

B. Should the Drawings or Specifications disagree, furnish the better quality or greater quantity of work or materials. Report any such inconsistencies to the Owner before proceeding with the Work.

C. All materials, products, machines, equipment and appliances incorporated in the Work shall be in accordance with the Drawings and Specifications and shall conform to the requirements of applicable codes, laws and ordinances.

D. All materials and equipment shall be new unless otherwise designated, and shall be of standard first-grade quality, produced by expert workmen. See Drawings and Specifications for material to be reused.

E. Equipment and appurtenances shall be designed in conformity with ANSI, ASME and other generally accepted standards, and shall be of rugged construction and of sufficient strength to withstand all stresses which may occur during fabrication, testing, transportation, installation, and all conditions of operation.

F. The equivalent parts of identical machines shall be made interchangeable. All grease-lubricated fittings on equipment shall be of uniform type. All machinery and equipment shall be safeguarded in accordance with applicable safety codes.

G. Any two or more pieces of new material or equipment of the same kind, type or classification, being used for the same type of service, shall be made by the same manufacturer.

2.02 BIDDER'S/CONTRACTOR'S OPTIONS FOR SPECIFIED PRODUCTS

A. For products specified only by ASTM or other reference standards, select any product by any manufacturer meeting such standards.

B. For products specified by naming several products and manufacturers, select any one product and manufacturer named.

C. For products specified by naming only one product and manufacturer, include only that specified product in the Base Bid and in the Work. The Bidder/Contractor has no option to exercise with regard to that product.

2.03 VOLUNTARY ALTERNATES

A. Should the Owner decide to accept any of the Voluntary Alternates submitted on the Bid Form, the Contractor shall submit all documentation required for the Owner's review. See Article 2.04, "Substitutions".

1. After the Owner's review and approval, the extra or credit generated from the substitution shall be incorporated in the Contract Sum by issuing a Change Order.

2.04 SUBSTITUTIONS

A. After the award of the Contract, if the Owner elects to consider a proposed substitution, the Contractor shall clearly substantiate the quality of the proposed substitute. In making a request for substitution, the Contractor makes the following representations and claims:

1. The product he proposes will perform as well in the project as the specified product.

2. He is thoroughly aware of the intended performance of the specified product in the project.

3. He has personally investigated the product he proposes.

4. He will provide the same guarantee for the substitution as for the specified product.

5. He will submit all data required for the Owner's review.

B. Submit to the Owner three (3) copies of a request for substitution. Include in the request:

1. Complete data substantiating conformance of the proposed substitution with Contract Documents.

2. For substitution of products:

a. Product identification, including manufacturer's name and address and telephone number.

b. Manufacturer's literature:

(1) Product description.

(2) Performance and test data.

(3) Reference standards.

c. Samples, if applicable.

d. Name and address of projects (similar to the Subject Project) on which the proposed product was used and the date of installation if requested by the Owner.

3. Itemized cost comparison of the proposed substitution with the product specified.

4. Data relating to changes in the construction schedule or to the design and aesthetic effect if applicable.

5. Relation to other contracts.

C. **Substitutions will not be considered:**

1. If they are indicated or implied on shop drawings, product data or samples submitted without a formal request for substitution in accordance with Paragraph 2.04 B.

2. If acceptance will require substantial revision of Contract Documents.

3. If additional cost is involved for Work under other contracts.

4. If they are proposed solely due to the Contractor's negligence in ordering specified products in accordance with his construction schedule, such as failure to allow for adequate time for fabrication or delivery or the like.

D. If substitution is accepted, the Owner will modify the Drawings and Specifications to accommodate the substitution and issue a change order.

PART 3 - EXECUTION

3.01 INSTALLATION

A. Methods of construction shall be in accordance with the intent of the Drawings and Specifications.

B. The Contractor shall have sufficient and proper equipment and machinery to execute the Work and to handle emergencies as may be encountered on work of this character.

C. Materials and equipment to be permanently incorporated in the Work shall be erected in a neat and workmanlike manner at the locations and elevations shown on the Drawings, unless directed otherwise by the Owner. All equipment shall be correctly aligned, leveled and adjusted for satisfactory operation and shall be installed so that proper and necessary connections can be made readily between the various units.

D. The Contractor shall provide all necessary anchor and attachment bolts and all other appurtenances needed for the installation of the materials, products, machines, equipment and appliances specified. Bolts shall be of sufficient size and strength for the purposes intended. Furnish Drawings and templates as required.

-END OF SECTION-

SECTION 02016
EXISTING SITE CONDITIONS

PART 1 -GENERAL

1.01 DESCRIPTION:

A. The existing utilities shown on the drawings are shown diagrammatically and it is not to be inferred that the locations shown are precise. The Contractor shall coordinate with all applicable utility owners prior to excavation in areas where it is reasonable to expect the presence of existing utilities, whether shown on the drawings or not.

1.02 MARKED UTILITIES:

A. The Contractor shall make such exploration as is necessary to determine the exact location of all underground utilities, and shall exercise sufficient care during the progress of work in the area to prevent damage to the utilities.

B. The Contractor shall be responsible for any and all damage to marked and unmarked existing utilities, caused by his efforts, and shall promptly repair and/or arrange to repair and put back into service any utility that may become interrupted by his activities. The costs associated with any such repair and/or loss of production shall be borne by the Contractor.

1.03 EXISTING UNDERGROUND STRUCTURES:

A. In areas where existing underground structures are shown or suspected, the Contractor shall carefully uncover such structures to such extent as to enable the Engineer to determine what adjustments, if any, need to be made to accommodate the presence or removal of such structure.

1.04 EXISTING SIGNS:

A. When it is necessary to remove street directory or regulatory signs during the course of construction, the Contractor shall temporarily reset and maintain the signs during construction and permanently reset the signs at designated locations prior to completion of the Contract. The cost of such maintenance and relocation of signs shall be considered incidental to the project and no distinct payment shall be made.

1.05 PHYSICAL FEATURES:

A. When it is necessary to remove mail boxes, fences, stone walls, retaining walls, shrubs, or any other physical features of the project site, the Contractor shall carefully remove, store, maintain, and reset prior to the completion of the Contract. The cost of such removal, storage, maintenance, and restoration shall be considered incidental to the project and no distinct payment shall be made.

1.06 OTHER:

A. Sidewalks shall not be obstructed for the free passage of pedestrians.

B. Fire hydrants shall not be buried or otherwise obstructed from accessibility to fire department personnel at all times.

-END OF SECTION-

SECTION 02020
DEWATERING

PART 1: GENERAL

1.01 GENERAL

A. The dewatering of all areas where work must be performed under this Contract is the responsibility of the CONTRACTOR and no additional sum will be allowed for any dewatering operation, overtime, equipment rental or any other expense incurred due to the occurrence of ground water, surface water or water from possible leakage of existing buildings, structures and piping in the vicinity of the CONTRACTOR'S operations.

B. Should water be encountered, the CONTRACTOR shall furnish and operate suitable pumping equipment of such capacity adequate to dewater the trench. The trench shall be sufficiently dewatered so that the laying and joining of the pipe is made in the dry. The CONTRACTOR shall convey all trench water to a natural drainage channel or storm sewer without causing any property damage and in strict accordance with state and/or local requirements.

C. Disposal of silt and debris which accumulates during construction shall be performed in strict accordance with state and/or local requirements.

1.02 PERMITS

A. The CONTRACTOR shall be responsible for obtaining and paying for any permits required for dewatering and disposal.

-END OF SECTION-

SECTION 02025
EXISTING UTILITIES AND STRUCTURES

PART 1: GENERAL

1.01 SCOPE OF WORK

A. Certain information regarding the reputed presence, size, character, and location of existing Underground Facilities such as pipes, drains, sewers, electrical lines, telephone lines, cable TV l Gas lines and water lines has been shown on the Contract Drawings and/or provided herein. This information with respect to Underground Facilities is provided by the OWNER in accordance with conditions described in Article 4 of the General Conditions.

1.02 NOTIFICATION OF UTILITIES

A. CONTRACTOR shall notify all utility companies that construction of the work under this Contract will pass through the areas where their services exist. Notification to the utilities must be made in a sufficient amount of time in advance (**min. 72 hours**) prior to start of any construction work in the affected areas.

PART 2: PRODUCTS

2.01 MATERIALS

A. Materials for temporary support, adequate protection, and maintenance for all underground and surface utility structures, drains, sewer and other obstructions encountered in the progress of the work shall be furnished by the CONTRACTOR at his own expense.

PART 3: EXECUTION

3.01 OBSTRUCTIONS BY OTHER UTILITY STRUCTURES

A, Where the grade or alignment of the pipe is obstructed by existing utility structures such as conduits, ducts, pipes, branch connections to main sewers, or drains, the obstruction shall be permanently supported, relocated, removed or reconstructed by the CONTRACTOR in cooperation with the owners of such utility structures. Before proceeding the CONTRACTOR must reach an agreement with the OWNER on method to avoid obstruction.

B. No deviation shall be made from the required line or depth except with the consent of the OWNER.

3.02 REPAIRS

A. Existing pipes or conduits crossing the trench, or otherwise exposed, shall be adequately braced and supported to prevent trench settlement from disrupting the line or grade of the pipe or conduit, all in accordance with the directions of the OWNER and governing authority(s). Utility services broken or damaged shall be repaired at once to avoid inconvenience to customers. Storm sewers shall not be interrupted overnight. Temporary arrangements, as approved by the OWNER and governing authority(s), may be used until any damaged items can be permanently repaired. All items damaged or destroyed by construction and subsequently repaired must be properly maintained by the CONTRACTOR.

B. Refer to detail drawings located on the construction drawings for the requirements for repair or replacement of sanitary or storm drains removed or damaged during installation of the water main.

3.03 RELOCATION

A. Where it is necessary to relocate an existing utility or structure, the work shall be done in such a manner as is necessary to restore it to a condition equal to that of the original facility. No such relocation shall be done until approval is received from the owner of the utility or structure being changed.

3.04 SEPARATION OF WATER MAINS, SANITARY SEWER AND STORM SEWERS

A. General

The following factors should be considered in providing adequate separation:

1. Materials and type of joints for water and sewer pipes,

2. Soil conditions,

3. Service and branch connections into the water main and sewer line,

4. Compensating variations in horizontal and vertical separations,

5. Space for repair and alterations of water and sewer pipes,

6. Off-setting of pipes around manholes.

B. Parallel Installation

Water mains shall be laid at least 10 feet horizontally from any existing or proposed sewer. The distance shall be measured edge to edge. In cases where it is not practical to maintain a 10 foot separation, the State Environmental protection Agency may allow deviation on a case-by-case basis, if supported by data from the OWNER. Such deviation may allow installation of the water main closer to a sewer, provided that the water main is laid in a separate trench or on an undisturbed earth shelf located on one side of the sewer at such an elevation that the bottom of the water main is at least 18 inches above the top of the sewer.

C. Crossings

Whenever water mains must cross building drains, storm drains, or sanitary sewers, the water main shall be laid at such an elevation that the bottom of the water main is 18 inches above the top of the drain or sewer. This vertical separation shall be maintained for the portion of the water main located within 10 feet horizontally of any sewer or drain it crosses. The 10 feet is to be measured as a perpendicular distance from the drain or sewer line to the water line.

D. Exception

When it is impossible to obtain the proper horizontal and vertical separation as stipulated above, the OWNER is to be notified. If directed by the OWNER, both the water main and sewer line shall be constructed of cast iron, ductile iron, galvanized steel or protected steel pipe having mechanical joints. Other types of joints of equal or greater integrity may be used at the discretion of the OWNER after consultation with the State Environmental Protection Agency. Thermoplastic pipe may be used provided mechanical or solvent weld pipe joints are used. These shall be pressure-tested to assure water tightness before backfilling. Where water mains must cross under a sewer, additional protection shall be provided by:

1. A vertical separation of at least 18 inches between the bottom of the sewer and the top of the water line,

2. Adequate structural support for the sewers to prevent excessive deflection of the joints and the settling on and breaking of the water line,

3. That the length of the water line be centered at the point of the crossing so that the joints shall be equidistant and as far as possible from the sewer.

Through the OWNER the State Environmental Protection Agency shall be consulted when any of the above conditions cannot be met to discuss the use of double casing or concrete encasement of sewer and/or water lines as possible alternatives.

-END OF SECTION-

SECTION 02055
REMOVAL AND ABANDONMENT OF EXISTING FACILITIES

PART 1- GENERAL

1.01 RELATED WORK

A. Trenching, Backfilling, and Compacting: Section 02210.

B. Paving and Surfacing: Section 02610.

C. Lawn Restoration: Section 02901.

E. Cast-In-Place Concrete: Section 03301.

1.02 SUMMARY

A. Work Included: Work involved without intending to limit or restrict the extent of the work is outlined as follows:

1. Demolition and removal of certain in-line structures and pipe.

2. Plugging existing facilities.

3. Filling existing facilities.

B. Demolition work, as specified herein, is not intended to be performed as a wrecking operation but as preparatory work relative to the performance of the various construction operations of the Project.

1.03 SITE CONDITIONS

A. Dust Control: To prevent unnecessary spread of dust during performance of demolition work, thoroughly moisten surfaces and debris as required to prevent dust being a nuisance to the public, neighbors and concurrent performance of other work on the site. Water for use in dust control shall be obtained from Contractor's own source.

B. Protection: Exercise care during demolition and removal work to confine demolition operations to the facilities as indicated on the Drawings. The physical means and methods used for protection are at the Contractor's option. However, the Contractor will be completely responsible for replacement and restitution work of whatever nature at no expense to the Owner.

1. Additionally, if public safety is endangered during the progress of the demolition work, provide adequate protective measures to protect public pedestrian and vehicular traffic on streets and walkways.

2. Signs, signals and barricades used shall conform to requirements of Federal, State and local laws, rules, regulations, precautions, orders and decrees.

C. Explosives and Blasting: Not permitted in performance of demolition work.

PART 2- PRODUCTS

2.01 MATERIALS

A. Materials needed or required for temporary protection in the form of barricades, fences, enclosures, etc., may be used construction materials of sound condition and reasonably clean. However, the condition of same materials shall meet or exceed the requirements of governing agencies or approving bodies as may be involved with the work.

B. Equipment, machinery and apparatus (motorized or otherwise) used to perform the demolition and removal work may be used as chosen at the Contractor's discretion, but which will perform the work within the limits of the Contract requirements.

1. Select Backfill: On site excavated material free of plant life, lumber, metal, refuse and rocks or similar hard objects larger than one inch in any dimension.

2. Aggregate Backfill: Select Granular Material (2RC) conforming to PDT Section 703.3.
3. Sand: ASTM C 33.

4. Gravel: AASHTO No. 8 Coarse Aggregate conforming to PDT Section 703.2.

5. Concrete: Class B: 3000 psi per requirements of Cast-In-Place Concrete: Section 03300.

PART 3- EXECUTION

3.01 INSPECTION

A. Prior to performance of the actual work, carefully inspect the entire site and locate those facilities designated to be demolished and removed or abandoned.

B. Do not begin Work of this section without approval to do so by the Owner.

C. Locate existing exposed and buried active utilities and determine the requirements for their protection.

3.02 PERFORMANCE

A. General: The means and methods of performing demolition operations are the sole responsibility of the Contractor.

B. Excavation and Backfilling: Per requirements of Section 02210.

1. Should the Contractor in demolishing or removing existing facilities excavate below the subgrade for new facilities, he will be required to backfill the area excavated below the subgrade with Aggregate Backfill or with concrete as required by the Engineer at his own expense and at no additional cost to the Owner.

2. Backfill substructure cavities using Selected Compacted Fill.

3. Backfill and restore surfaces in the area of demolished structures.

C. Debris Removal: Dispose of demolition debris off Site in a lawful manner at an approved landfill site.

D. Salvage: Owner has right to claim as salvage, items and materials removed under work of this Section. Move and neatly store removed items claimed as salvage by Owner to a location agreeable to Owner, and in manner approved by Owner.

E. Capping Existing Facilities:

1. Cap/Plug cut ends of water mains to be abandoned. Restrain as required and indicated on drawings.

2. Close existing corporation stops on water services to be abandoned except those on abandoned mains.

F. Removal and Filling Existing Valve Boxes:

1. Remove complete valve box indicated to be abandoned.

2. Restore the area per the appropriate detail drawing in the construction.

a. Puddling or jetting compacting methods are not permitted.

G. Removal of Existing Fire Hydrants and Watch Valves:

1. Remove hydrants and valves where indicated on Drawings.

2. Provide caps on existing lines where hydrants and valves are removed.

3. Remove and store hydrants claimed as salvage by Owner at a location designated by Owner.

H. Abandoning Existing Mains:

1. Transfer services to new water main, connecting to existing service on outlet side of existing curb stop/meter pit.

2. Close existing curb stop/meter pit valve and remove existing curb box/meter pit.

3. Close system valves to isolate main to be abandoned (to be coordinated with and performed by Owner).

4. Cut, cap, and block existing main as detailed on Drawings.

5. Reopen system valves (to be coordinated with and performed by Owner).

6. Valves to be operated by OWNER only.

-END OF SECTION -

SECTION 02100
SITE PREPARATION

PART 1: GENERAL

1.01 SCOPE OF WORK

A. Furnish all labor, materials, and equipment required and perform all site preparation, complete as shown on the drawings and as specified herein.

B. Obtain all permits required for site preparation work prior to proceeding with the work, including clearing, tree removal, and others as may be required.

C. The areas to be cleared, grubbed, and stripped including public rights-of-way and utility easements shall be minimized to the extent possible. The actual means and methods of construction used shall be taken into consideration. The width of the area to be cleared shall be approved by the Owner prior to the beginning of any clearing.

1.02 SUBMITTALS

A. None

PART 2: PRODUCTS (NOT USED)

PART 3: EXECUTION

3.01 CLEARING

A. Cut and remove all timber, trees, stumps, roots, grass, weeds, rubbish, and any other objectionable material resting on or protruding through the surface of the ground.

B. Trees and other vegetation designated on the drawings or directed by the Owner to remain shall be preserved and protected as specified below.

3.02 GRUBBING

A. Grub and remove all stumps, roots in excess of 1-1/2 inches in diameter, matted roots, brush, timber, logs, concrete rubble, and other debris encountered to a depth of 18-inches below original grade or 18-inches beneath the bottom of foundations, whichever is greater.

B. All grubbing holes and depressions excavated below the original ground surface shall be refilled with suitable materials and compacted to a density conforming to the surrounding ground surface

3.03 STRIPPING

A. Strip topsoil from all areas to be occupied by buildings, structures, and roadways, and all areas to be excavated or filled.

B. Topsoil shall be free from brush, trash, large stones and other extraneous material. Avoid mixing topsoil with subsoil.

C. Stockpile and protect topsoil until it is used in final grading operations. Dispose of surplus topsoil after all work is completed.

3.04 DISPOSAL

A. Material and debris from site preparation operations shall be disposed of by hauling such materials and debris to an approved off-site disposal area. No rubbish or debris of any kind shall be permitted to be buried on the project site.

B. On-site disposal of cleared and grubbed materials by open-air burning shall not be allowed.

3.05 PROTECTION

A. Trees and other vegetation designated on the drawings or directed by the Owner to remain shall be protected from damage by all construction operations by erecting suitable barriers, guards, and enclosures, or by other approved means. Clearing operations shall be conducted in a manner to prevent falling trees from damaging trees and vegetation designated to remain and to the work being constructed and so as to provide for the safety of employees and others.

B. Those trees which are designated by the Owner for preservation shall be carefully protected from damage. The Contractor hall erect such barricades, guards, and enclosures as may be considered necessary by him for the protection of the trees during all construction operations.

C. Protection shall be maintained until all work in the vicinity of the work being protected has been completed.

Heavy equipment operation or stockpiling of materials shall not be permitted within the branch spread of existing trees designated to be preserved.

D. Any damage to existing tree crowns, trunks, or root systems shall be repaired immediately. Roots exposed and/or damaged during the work shall immediately be cut off cleanly inside the exposed or damaged area. Cut surfaces shall be treated with acceptable tree wound paint, and topsoil spread over the exposed root area.

E When work is completed, all dead and downed trees shall be removed. Live trees shall be trimmed of all dead and diseased limbs and branches. All cuts shall be cleanly made at their juncture with the trunk or preceding branch without injury to the trunk or remaining branches. Cuts over 1-inch in diameter shall be treated with acceptable tree wound paint.

F. Construction activities shall be restricted to those areas within the limits of construction designated on the drawings, within public rights-of-way, and within easements provided by the Owner. The Contractor shall exercise extreme care to avoid unnecessary disturbance of developed property as applicable. Adjacent properties and improvements thereon, public or private, which become damaged by construction operations, shall be promptly restored to their original condition, to the full satisfaction of the property owner using equal quality materials and workmanship. This includes all trees, shrubbery, gardens, lawn and other landscaping, or any physical features such as fences, walls, mailboxes, etc.

G. These specifications shall apply to the preservation and restoration of all damaged areas of public lands, parks, rights-of-way, easements, etc.

-END OF SECTION-

SECTION 02105
CLEARING AND GRUBBING

PART 1: GENERAL

1.01 PROTECTION

A. Existing trees, shrubs and bushes outside the clearing limits shall be protected from damage during the life of this Contract.

1.02 REQUIREMENTS OF REGULATORY AGENCIES

A. Comply with State and local code requirements when disposing of trees, shrubs and all other materials removed under this Section.

1.03 PAYMENT

A. All costs to obtain a suitable disposal area, hauling to the disposal area and dumping at the disposal area shall be borne by the CONTRACTOR.

PART 2: PRODUCTS

2.01 MATERIALS AND EQUIPMENT

A. Provide all materials and equipment required to complete all clearing and grubbing in accordance with this Section.

PART 3: EXECUTION

3.01 CLEARING AND GRUBBING

A. Clear and grub the minimum area to provide space for construction operations.

B. Trees, down timber, shrubs, bushes, vines, roots, stumps, undergrowth, rubbish, paving materials, debris and all other objectionable materials shall be removed within the limits of clearing and grubbing.

3.02 DISPOSAL

A. Burning of logs, stumps, roots, cuttings and other material on the site will not be permitted.

B. All materials obtained as a result of the clearing and grubbing operations shall be disposed of in accordance with the requirements of the applicable governing agencies.

C. Chipping of brush materials will be permitted, but the resultant chips must be disposed of at an approved location.

- END OF SECTION -

SECTION 02210
TRENCHING, BACKFILLING AND COMPACTING

PART 1: GENERAL

1.01 DEFINITIONS

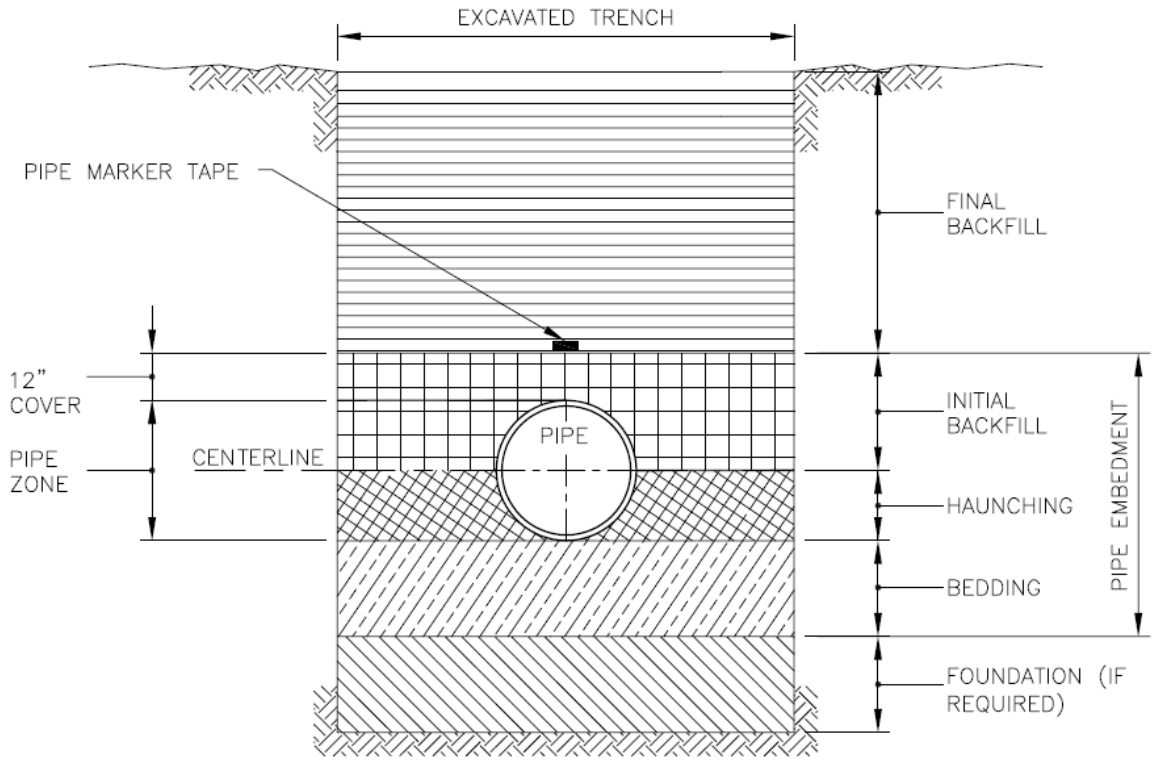

TRENCH TERMINOLOGY

FOUNDATION: A FOUNDATION IS NECESSARY ONLY WHEN NATIVE SOILS ARE UNSTABLE. FOR SUCH CONDITIONS, THE TRENCH IS OVER-EXCAVATED AND A LAYER OF SUPPORTIVE MATERIAL IS PLACED AND COMPACTED TO PROVIDE A FIRM FOUNDATION FOR THE SUBSEQUENT PIPE EMBEDMENT MATERIALS.

EMBEDMENT: THIS ZONE IS THE MOST IMPORTANT IN TERMS OF PIPE PERFORMANCE. IT IS DIVIDED INTO THE FOLLOWING SUB ZONES:

- BEDDING: TYPICALLY SIX INCHES OF SUPPORTIVE, COMPACTED MATERIAL. THIS ZONE PROVIDES EVEN SUPPORT FOR THE PIPE AND BRINGS IT TO GRADE.
- HAUNCHING: EXTENDS FROM THE BOTTOM OF THE PIPE TO THE CENTERLINE OF THE PIPE. IT PROVIDES THE MOST RESISTANCE TO PIPE DEFLECTION. SPECIFYING PROPER MATERIALS AND COMPACTION ARE MOST IMPORTANT FOR THIS ZONE.
- INITIAL BACKFILL: EXTENDS FROM THE SPRINGLINE TO A POINT ABOVE THE TOP OF THE PIPE. THIS ZONE PROVIDES SOME PIPE SUPPORT AND HELPS TO PREVENT DAMAGE TO THE PIPE DURING PLACEMENT OF THE FINAL BACKFILL. THE COVER EXTENDS FROM THE TOP OF THE PIPE TO THE TOP OF THE INITIAL BACKFILL. THE DEPTH OF COVER SHOULD BE AS MUCH AS NECESSARY TO PROTECT THE PIPE DURING PLACEMENT OF THE FINAL BACKFILL. TWELVE INCHES IS A COMMON DEPTH OF COVER.

FINAL BACKFILL: THIS ZONE EXTENDS FROM THE TOP OF THE INITIAL BACKFILL TO THE TOP OF THE TRENCH. THIS ZONE HAS LITTLE INFLUENCE ON PIPE PERFORMANCE, BUT CAN BE IMPORTANT TO THE INTEGRITY OF ROADS AND STRUCTURES.

1.02 SUBMITTALS

A. All backfill materials including common fill and selected fill shall be approved by the Owner prior to placing the materials in the pipe trench. Test all backfill materials, whether obtained from the trench excavation or from an off-site source, as directed by the Owner.

B. All backfill materials must be approved by the Owner before they are placed in the pipe trench. Submit samples of the materials to an approved testing agency for analysis as required by the Owner. Submit the testing agency's test results and report to the Owner. The report must state that the materials meet the requirements of these Specifications and the Specifications of Federal, State and local authorities (where applicable). Provide flowable fill in areas where it is required by the governing authority(s), where the trench is subject to mine drainage and other areas specified in the drawings.

1.03 PROFILES AND TOPOGRAPHY

A. Contours, topography and profiles of the ground shown on the Drawings are believed to be reasonable approximations and are not guaranteed.

B. The Contractor accepts the construction site with the conditions that existed at the time of bidding.

PART 2: PRODUCTS

2.01 FILL MATERIAL

A. Material for backfilling shall be shown on the plans and consist of ODOT Item 304 and 57 aggregate. Slag and fly ash is not acceptable.

2.02 BEDDING MATERIAL

A. ODOT Standards Specification, sand (natural or sand manufactured from stone) conforming to ODOT ITEM 703.11 (no slag or fly ash products).

2.03 FILTER FABRIC

A. Filter Fabric shall be non-woven, synthetic fiber material with sieve design or not permit the select material in the pipe bedding and haunching to migrate into the surrounding soils. The material shall have a minimum thickness of 15 mils, tensile strength of 130 lbs. elongation at break of 64% and trapezoidal tear strength of 70 lbs.

PART 3: EXECUTION

3.01 CONSTRUCTION EQUIPMENT

A. All backfilling and materials handling equipment shall have rubber tires when mains are located in or adjacent to pavements. Crawler equipment shall be permitted when there is no danger of damaging pavement. It is the Contractor's responsibility, to repair, at their expense, any damages due to the use of any equipment to complete the work.

3.02 NOISE, DUST AND ODOR CONTROL

A. Conduct all construction activities so as to eliminate all unnecessary noise, dust and odors.

3.03 PROTECTION OF TREES

A. Take special care to avoid damage to trees and their root system. Open trenching shall **not be** used for established trees in areas marked on the plans and designated 'Root Protection Zone'. In these areas, methods to be used include tunneling or boring. In other areas where established trees are to remain with roots in the path of the trench line, the Owner shall direct acceptable means to install pipe through tree roots. In these areas, methods to be used careful cutting (not ripping or tearing) of larger tree roots. In all cases, operate equipment within the limb spread in a manner which will not injure trees, trunks, branches or their roots. Pay particular attention when employing booms, storing materials, and handling excavated materials.

3.04 TRENCH SUPPORT

A. Support open cut excavation for mains where trenching may cause danger to life, unnecessary damage to street pavement, trees, structures, poles, utilities, or other private or public property. Support the sides of the excavation by adequate and suitable sheeting, shoring, bracing or other approved means in accordance with all applicable Federal, State, County, Municipal and OSHA rules and regulations during the progress of the work, whenever and wherever it is necessary. Maintain the trench support materials and equipment in place until backfilling operations have progressed to the point where the supports may be withdrawn without endangering life or property per Article 6 on safety issues.

3.05 TRENCH EXCAVATION AND BOTTOM PREPARATION

A. General Excavation

General excavation shall consist of the satisfactory removal and disposal of all material taken from within the limits of the Work contracted, meaning the material lying between the original ground line and the finished ground line as shown on the Drawings regardless of whether the original ground line is exposed to air or is covered by water. Excavation below existing ground line to enable any required construction or removals is included. It is distinctly understood that any reference to earth, rock, silt, debris or other materials on the Drawings or in the Specifications is solely for the Owner's information and shall not be taken as an indication of classified excavation or the quantity of earth, rock, silt, debris or other material encountered.

Excavation to the lines and grades indicated on the Drawings or established in the field by the Owner. Backfill over-excavated areas with approved fill material. All labor and materials shall be furnished at the Contractor's expense.

Keep all excavations free from water. Maintain groundwater a minimum of 6 inches below excavations. Remove soil which is disturbed by pressure or flow of groundwater and replace with free draining material.

Remove pavement over excavations made in paved roadways by saw cutting, milling, or removal by a trench machine. Cut the full depth of the pavement with straight lines and s quared edges.

Dispose of excess excavated materials and excavated materials unsuitable for backfilling off site. Furnish the Owner with satisfactory evidence that an appropriate disposal site was used.

B. Rock Excavation

If the Contract includes a unit price for rock excavation, it includes the removal, hauling, stockpiling and/or proper disposal the rock per the section 01700 Basis of Payment. Rock is defined as:

- boulders or loose rock having a volume of one cubic yard or more;
- material which cannot be loosened or broken down by ripping with a hydraulic ripper or other Owner approved devices and equipment designed to remove rock; or
- material that requires systematic blasting, backhoe ramming, barring, or wedging for removal.

Notify the Owner promptly upon encountering rock. The Owner's determination as to whether the material meets the definition of rock and Owner's measurement of the volume of rock removal for which the Contractor is entitled to payment will be final and conclusive. No payment will be made for rock removed without Owner's approval.

Strip rock for measurements as directed by the Owner. No payment will be made for rock excavated or loosened before measurement. Only rock actually removed will be paid for, and in no case will payment be made for rock removal beyond the payment limits shown for a standard trench or more than 12" beyond the edge of a pipeline or 6" below its bottom for pipes of nominal OD 24 inches and less, unless such rock has been removed at the direction of Owner.

C. Blasting Rock

Blasting is not allowed unless expressly permitted by the Owner. Notify the Owner in advance of blasting activity. Provide evidence to the Owner that the proposed blasting will comply fully with Laws or Regulations.

Do not blast where limited or prohibited by any Federal, State or local laws or regulations, or in violation of any limitation or restriction contained in any right-of-way, or wherever specifically prohibited in any Drawing or other Contract Document. Do not blast within forty (40) feet of any pipe or structure without specific permission from the Owner. Properly cover blasts and protect the pipe or structure. Warn all persons in the vicinity. Blasting shall be at the risk of the Contractor who shall be liable for all damages to persons or property. Secure and pay for all necessary permits. Perform whatever pre-blast surveys and investigations that may be required by the circumstances and/or by Federal, State or local laws.

Prepare a blasting plan and submit it to the Owner for approval prior to commencing any blasting work. The plan shall state all procedures and methods which will be used to monitor and mitigate the effect or impact of the proposed blasting work.

Employ an experienced blaster holding a blasting license issued by the applicable State to carry out the blasting work. Use, handle, and store explosives as prescribed by the applicable state and federal regulations. Keep all explosives in a safe place at a sufficient distance from the Work so that, in case of accident, no damage will occur to any part of the Work. Contractor shall be held responsible for and shall pay for all damage caused by blasting operations or accidental explosion.

D. Trench Width

Widths of trenches shall be held to a minimum to accommodate the pipe and appurtenances. The trench width shall be measured at the top of the pipe barrel and shall conform to the following limits:

Earth

Minimum: Outside diameter of the pipe barrel plus 8 inches, i.e., 4 inches each side.

Maximum: Nominal pipe diameter plus 24 inches.

Rock

Minimum: Outside diameter of the pipe barrel plus 24 inches, i.e., 12 inches each side.

Maximum: Normal pipe diameter plus 30 inches. (Contractor will only be compensated for the minimum described above.

E. Excessive Trench Width

Provide additional backfill, haunching, and bedding material, as specified in Specification Sections 2210.2.01, 2210.2.02, and 2210.2.03 as approved by the Owner to fill any trench excavation that exceeds the maximum trench width defined in Specification Section 2110.3.05.D. Dispose of excess excavated materials off site at no cost to the Owner. Furnish the Owner with satisfactory evidence that an appropriate disposal site was used.

F. Trench Depth

(1) General Provide prescribed minimum cover from the top of the pipe barrel to the top of the finished grade of the roadway, unless otherwise authorized by the Owner, or as shown on the plans.

(2) Earth Excavate to the depth required, so as to provide a uniform and continuous bearing and support for the pipe barrel on solid and undisturbed ground at every point between joints. It will be permissible to disturb the finished trench bottom over a maximum length of 18 inches near the middle of each length of pipe by the withdrawal of pipe slings or other lifting tackle. Provide bell holes. Prepare the finished trench bottom accurately using hand tools.

(3) Rock Excavate trenches in rock or boulders 6-inches below the pipe barrel for pipe 24-inches or less in diameter. Remove all loose material from the trench bottom. Prepare a pipe bed using bedding material as specified in Specification Section 2210.2.03.

(4) Unsuitable Bottom Notify the Owner whenever unsuitable material is found below subgrade. Remove the material over the area and to the depth determined by the Owner. Provide compacted bedding material as specified in Specification Sections 2210.2.03 to restore the trench bottom to the required grade in these areas.

G. Open Trench Length

The length or size of excavation shall be controlled by the particular surrounding conditions, but shall always be confined to the limits prescribed by Owner. If the excavation becomes a hazard, or if it excessively restricts traffic at any point, Owner may require special construction procedures such as limiting the length of the open trench or prohibiting stacking excavated material in the street. Take precautions to prevent injury to the public due to open trenches. All trenches, excavated material, equipment, or other obstacles which could be dangerous to the public, shall be well lighted.

3.06 TRENCH BACKFILLING

A. Backfill to top of Pipe Barrel

All trench backfilling shall be backfilled immediately after pipe is laid. Compacted bedding material is described in Section 2210.2.02 shall be used to backfill the trench from 4" below the pipe to the bottom of the pipe.

B. Remaining Trench Backfill

From the top of the pipe barrel to the surface, as described in Section 2210.2.01, shall be used as backfill material. No material shall be used for backfilling that contains frozen earth rock, large stones, boulders, or other unsuitable materials. The Contractor may use mechanical equipment to place the backfill. This shall be done in such a manner that the material does not free fall, but shall be so placed that it will flow into the previously placed material. The contractor shall consolidate the backfill in such a manner as will ensure the minimum possible settlement and the least interference with traffic. No compacting of the backfill with mechanical equipment, such as a wheeled vehicle will be permitted unless sufficient cover is provided over the pipe to prevent damage to the pipe.

3.07 QUALITY ASSURANCE TESTING

A. The Owner reserves the right to have the Contractor provide Independent Quality Assurance Testing for the backfill material, at the Contractor's expense.

3.08 TRENCH MAINTENANCE

A. Assume full responsibility for the condition of the trenches for a period of one (1) year from the date of the final acceptance of the Contractor's work, or as required by state, county or local authorities, and any materials required for filling depressions caused by settlement or wash-out shall be supplied and placed by the Contractor at their expense.

- END OF SECTION -

SECTION 02400
SHORING

1. DESCRIPTION OF WORK:

Furnish and install sheeting and bracing where called for on the drawings, where directed by the Engineer, and where required to meet OSHA safety requirements. Trench excavations in public streets and other confined areas where trench walls cannot be sloped must be supported by sheeting and shoring, trench shoring box, or other methods acceptable to the Engineer and meeting OSHA requirements.

2. MATERIALS:

A. Lumber and timber used for wood sheeting and bracing shall be construction grade lumber, and the design of support system based on types of materials available.

B. Steel sheet piling shall be interlocking type of section best adapted to design requirements.

C. Trench shoring box shall be constructed of steel and shall meet all local, state and federal safety standards, including OSHA Standard 1926.650, Subpart P.

3. EXECUTION:

A. Install sheeting and bracing or trench shoring box(es) in accordance with accepted practices and in compliance with State and Federal safety requirements. Furnish skilled and experienced workmen with adequate equipment to produce a safe structure.

B. Wherever possible, sheeting shall be driven prior to excavation. Voids outside the driven sheeting shall be filled and compacted to hold trench sides in place.

C. Sheeting and bracing shall be left in place where shown on the contract drawings or where directed by the Engineer. Where sheeting is placed alongside the pipe and extends below mid-diameter, it shall be cut off and left in place to an elevation not less than 1' above the top of the pipe, nor shall it extend closer than 3' to finish grade; all as directed by the Engineer.

D. Unless sheeting is to remain in place, it shall be removed as the work progresses in a manner to prevent loosening and caving of the sides of the excavation and to prevent damage to finished work or adjacent structures and property. Fill all voids as soon as sheeting is withdrawn.

-END OF SECTION-

SECTION 02514
DRAINAGE STRUCTURES

PART 1 - GENERAL

1.01 DESCRIPTION:

A. Work under this Section includes all labor, materials and equipment to provide for the removal and replacement of catch basins, drop inlets and manholes as specified herein, shown on the Drawings and as directed by the Owner.

B. The Contractor shall replace all drainage structures which have been removed or damaged during construction operations.

PART 2 - PRODUCTS

2.01 MATERIALS:

A. All products for drainage structures to be replaced or reconstructed shall conform to the requirements of Catch Basins, Drop Inlets, and Manholes; of the ODOT Construction and Material Specificatons.

B. Replacement drainage structures shall be precast concrete sections.

PART 3 - EXECUTION

3.01 INSTALLATION:

A. All drainage structures shall be constructed in accordance with the requirements of the ODOT Construction and Material Specifications.

B. Precast bottoms shall be carefully bedded on a 2" compacted sand cushion.

C. Existing frames, covers and gratings may be reused, if approved by the Owner and governing authority(s).

-END OF SECTION-

SECTION 02520
DRAINS AND SEWERS

PART 1 - GENERAL

1.01 DESCRIPTION:

A. Work under this Section includes all labor, materials and equipment to provide for the removal and replacement or relaying of drains and sewers as specified herein, shown on the Drawings and as directed by the Owner.

B. The Contractor shall replace all drains and sewers which have been removed or damaged during construction operations.

PART 2 - PRODUCTS

2.01 MATERIALS:

A. Ductile Iron Pipe:

1. Ductile Iron Pipe shall conform to the latest revised specification requirements of ANSI A21.51 (AWWA C151) and shall be thickness Class 51 for pipe 4-inch and smaller and Class 50 for pipe 6-inch through 24-inch unless otherwise designated on the Drawings. Pipe shall have push-on joints and nominal 18 or 20 foot laying lengths. All ductile iron pipe shall be cement lined in accordance with the requirements of ANSI A21.4 (AWWA C104).

B. PVC Pressure Pipe:

1. PVC plastic pressure pipe shall be made of Type I Grade 1 polyvinyl chloride conforming to the latest revised specification requirements of ASTM D-1784, and manufactured to meet the latest revised specification requirements of ASTM D-2241 for 160 PSI pressure rated pipe with a standard dimension ratio of 26.

2. Underground pipe joints shall be push-on bell and spigot type with rubber ring joint seal gasket furnished by the pipe manufacturer. All joints shall be assembled in accordance with the manufacturer's instructions.

3. Fittings shall be PVC or cast iron with joints designed for use with PVC plastic pressure pipe.

C. PVC Sewer Pipe and Fittings:

1. PVC sewer pipe and fittings shall meet the requirements of ASTM D3034, SDR 35. Pipe shall have a lay length of 12-1/2 or 20 feet.

2. All joints shall be of the push-on type and conform to ASTM D3212. Gaskets shall be in accordance with ASTM F477. All bells shall be formed integrally with the pipe and shall contain a factory installed elastomeric gasket which is positively retained. Wall thickness of this bell at any point shall not be less than the required minimum for the pipe barrel. No solvent cement joints will be permitted in field construction except as specifically authorized by the Owner and governing authority(s). Fittings shall be one piece molded units.

3. All fittings shall have push-on joints which are compatible with the pipe and conform to ASTM D3034.

4. The PVC polymer compound and classification shall be in accordance with ASTM D1784 (Class 12454-B).

D. Transition Coupling:

1. Transition couplings shall be elastomeric polyvinyl chloride (PVC) Fernco couplings with stainless steel bands, or approved equal.

E. Pipe Wrap Insulation:

1. Pipe insulation shall be 3-inch thick Foamglass pipe insulation with Pittwrap jacketing as manufactured by Pittsburgh Corning or approved equal.

F. Handling and Storage:

1. All materials shall be handled and stored in accordance with the manufacturer's recommendations.

G. Gasket Materials:

1. All pipe gaskets and couplings shall be constructed of an oil resistant material.

PART 3 - EXECUTION

A. Pipe Laying:

1. The pipe shall be accurately laid to the line and grades using transits, levels, and lasers to the satisfaction of the Owner. The line and grade may be adjusted by the Engineer from that shown on the drawings to meet field conditions and no extra compensation shall be claimed therefore. Whenever the nature of the material excavated is such as to render it unsuitable for bedding, the Contractor shall furnish suitable material as otherwise provided in these specifications.

2. Pipe laying shall begin at a manhole or catch basin or existing pipe and proceed upstream unless approved otherwise by the Owner. The interior of each length of pipe shall be clean before laying the next length. No length of pipe shall be laid until the previous length has had specified material placed and tamped about it to secure it firmly in place to prevent any disturbance. Bell ends shall be laid uphill. Whenever the work is stopped temporarily, for any reason whatsoever, the end of the pipe shall be carefully protected against dirt, water, or other extraneous material.

3. The bottom of trenches shall be prepared by hand to form a bedding for the pipe such that an arc of the circumference of the pipe barrel equal to one tenth of the diameter is in firm bearing under the pipe before backfilling.

4. Do not use pipe already laid to conduct water from the work area.

5. Bedding materials shall be uniformly placed and compacted to support the bottom quadrant of all drains and sewers. Bedding materials shall be placed with minimum thickness of 6-inches under pipe barrels and 4-inches under bells.

6. A sand blanket shall be installed over all drains and sewers. The sand blanket shall extend from the springline of the drain or sewer to 12-inches over the crown of the drain or sewer.

B. Pipe Joints:

1. All joints shall be made in a dry trench and in accordance with the manufacturer's recommendations and in accordance with the best practices for class of pipe laid. The bells and spigots of the pipe or couplings shall be

wiped clean with a dry cloth before making the joint.

2. Ends of pipe shall be stopped and protected when laying of pipe is interrupted.

C. Pipe Cutting:

1. Where required, sections of pipe may be cut to provide shorter sections of pipe necessary for the construction. The cutting of pipe shall be done in accordance with the pipe manufacture's recommendations and subject to the approval of the Owner.

2. In general, the pipe material shall be cut by using a cut-off saw or milling process, approved by the pipe manufacturer and not by using any impact device, such as a hammer and chisel, to break the pipe. The pipe shall be cut, not broken. The cut end of the pipe shall be square to the axis of the pipe and any rough edges ground smooth.

D. Removal and Relaying:

1. Remove cast iron, concrete, reinforced concrete, corrugated metal, asbestos cement, or vitrified clay drains ranging from a diameter of 6-inch to 36-inches, where required in the work, and relay them after construction to conform with lines and grades existing prior to construction. Every effort shall be made to brace or otherwise s upport the drains in lieu of removal, wherever possible.

2. A trench of sufficient width and depth shall be excavated so that the drains can be removed without damage.

E. Stockpiling and Protection:

1. Stockpile all removed sections of pipe at or near the job site. They shall be properly stacked or dispersed and protected to prevent damage. The Contractor shall replace any sections that are to be relayed which may become lost, damaged or destroyed as a result of his operations, or because of his failure to properly store and protect them in a manner that would eliminate such damage or loss.

F. Provide all trenching, backfilling and compacting as specified in Section 02210.

-END OF SECTION-

SECTION 02540
EROSION CONTROL

PART 1 - GENERAL

1.01 DESCRIPTION OF WORK:

A. The Contractor shall provide all materials, equipment, and labor necessary for the removal of surface water and as required to provide silt and erosion control structures in accordance with these Specifications.

B. Permanent Control: This work shall consist of furnishing and placing mulch on surfaces prepared and seeded under other items, at locations shown on the plans or directed by the Engineer.

C. Temporary Control: When the use of hay bales is ordered, this work shall consist of furnishing and placing hay bales as a temporary erosion and pollution control device at locations shown on the plans or directed by the Owner. When seeding is ordered, this work shall consist of sowing seed on the areas directed.

1.02 STANDARDS:

A. Temporary Soil Erosion and Sediment Control, ODOT Specifications Section, Item 207.

B. Storm Water control, Clean Water Act Section 402(P) CFR 122-26, 1990.

1.03 SUBMITTALS:

A. The Contractor shall furnish to the Owner, in writing, his plan for controlling erosion and siltation before beginning the construction work. Said plan shall also include the methods to be utilized for protecting and stabilizing steep slopes, stream banks, and channels which will be affected by the construction work. Acceptance of this plan will not relieve the Contractor of responsibility for completing the work as specified.

PART 2 - PRODUCTS

2.01 MATERIALS:

A. Mulch: Mulch shall consist of late cut, matured, and cured hay. When air-dried in the loose state, the contents of a representative bale shall lose not more than 15 percent of the resulting air-dry weight of the bale. It shall be free from primary noxious weed seeds and rough or woody materials.

B. Seed: Seed for temporary control shall be annual rye.

C. Hay Bales: Hay bales for erosion control shall consist of rectangular-shaped bales of hay or straw weighing at least 40 pounds per bale. They shall be free from primary noxious weed seeds and rough or woody materials.

D. Silt Fences: Filter fences shall be composed of a wire support fence and an attached synthetic filter fabric.

PART 3 -EXECUTION:

3.01 INSTALLATION:

A. The Contractor shall build, maintain, and operate all coffer-dams, channels, flumes, sumps, and other temporary diversion and protection works needed to divert stream flow and other surface water through or around the construction site and away from the construction work while construction is in progress. Unless otherwise specified, stream diversion must discharge into the same natural drainage way in which its head works are located. Storm runoff from disturbed areas must discharge into a natural drainage way.

B. Areas where existing stream banks are to be excavated shall be protected by constructing straw dikes at the top of slope to divert storm runoff from the disturbed area or at the toe of the slope to retain sediments, as conditions permit.

C. The discharge from pumping operations during dewatering operations shall be contained by a dike so constructed as to prevent silt from entering the stream and the area of the outlet pipe shall be protected against erosion by the construction of a rock or timber apron.

D. Straw bale dikes may be required parallel to the stream channels in order to contain sediments from the excavation operation. Bales shall be staked to hold straw bales in place.

E. Silt fences may be required to intercept and retain small amounts of sediment from disturbed areas during construction. Silt fences shall be erected so that the filter fabric extends 4 inches below existing grade elevation.

F. Check dams shall be installed when directed by the Engineer.

G. Prior to removal of all sediment control dikes, all retained silt or other materials shall be removed at no additional cost to the Owner. If required, silt shall be removed during construction by direction by the Engineer.

H. Mulching shall be done immediately after each has been properly prepared. When seed for erosion control is sown prior to placing the mulch, the mulch shall be placed on the seeded areas within 48 hours after seeding. Hay that has been thoroughly fluffed shall be applied at approximately, but not to exceed, 3 tons per acre unless ordered by the Engineer. Blowing chopped mulch will be permitted when authorized. Authorization will be given when it can be determined that the mulch fibers will be of such length and applied in such a manner that there will be a minimum amount of matting that would retard the growth of plants. Hay mulch should cover the ground enough to shade it, but the mulch should not be so thick that a person standing cannot see ground through the mulch. Matted mulch or bunches shall be removed or otherwise taken care of.

I. In order to prevent its being blown away, after the mulch has been spread to the required depth, a light covering of loose branches, a system of pegs and strings, or other approved methods shall be employed. Unless otherwise ordered, such means of control shall be removed prior to the acceptance of the project.

J. All baling wire or rope, such as that used in the shipment of mulch, shall be disposed of outside the limits of the project in approved areas.

K. Areas of the roadside which are to be left temporarily and which will be regarded or otherwise disturbed later during construction may be ordered to be seeded with rye to obtain temporary control. The seed shall be sown at the rate of approximately 1 pound per 1,000 square feet, on the pure live seed basis.

3.02 MAINTENANCE:

A. The Contractor shall maintain all erosion control measures until the completion of the Contract.

B. Erosion control hay bales, silt fences, and other measures shall be removed when directed by the Owner.

-END OF SECTION-

SECTION 02558
IDENTIFICATION/LOCATION GUIDE

PART 1: GENERAL

1.01 SCOPE

A. Furnish and install identification tape and location wire over the centerline of buried potable water mains.

PART 2: PRODUCTS

2.01 IDENTIFICATION TAPE

A. Identification Tape for Polyvinyl Chloride Pipe

Identification tape shall be manufactured of polyethylene with a minimum thickness of 4-mils and shall have a 1-mil thick metallic foil core. The tape shall be highly resistant to alkalis, acid and other destructive agents found in soil. Tape width shall be a minimum of 3" and a maximum of 6" and shall have background color specified below, imprinted with black letters. Imprint shall be as specified below and shall repeat itself a minimum of once every 2' for entire length of tape.

B. Tape background colors and imprints shall be as follows:

Imprint	Background Color
"Caution - Water Line Buried Below"	Blue

C. Identification tape shall be "Terra Tape" as manufactured by Reef Industries, Inc., Houston, TX, or approved equal.

2.02 LOCATION WIRE

A. Location Wire for Polyvinyl Chloride Pipe and High Density Polyethylene Pipe

Location wire shall be a 12 gauge insulated, solid copper wire. The wire shall be contiguous with no fabricated, or field constructed connections interrupting the wires continuity from valve box to valve box. Wire insulation shall be highly resistant to alkalis, acid and other destructive agents found in soil.

PART 3: EXECUTION

3.01 INSTALLATION OF IDENTIFICATION TAPE

A. Identification tape shall be installed with all buried potable water lines in accordance with the manufacturer's installation instructions and as specified herein.

B. Identifications tape shall be installed 2' below final grade over centerline of pipe.

3.02 INSTALLATION OF LOCATION WIRE

A. Location wire shall be installed with all buried PVC water lines in accordance with the manufacturer's installation instructions and as specified herein.

B. Location wire shall be installed no greater than 6 inches in height above the centerline of the buried pipe.

C. In all PVC/HDPE pipe installations, the location wire shall be looped up into the valve boxes for connection to a locating devise. The tape shall be one continuous piece from valve box to valve box.

END OF SECTION

SECTION 02600
PIPE INSTALLATION AND RELATED MATERIALS

PART 1 - GENERAL

1.01 RELATED DOCUMENTS:

A. The general provisions of the Contract, including General and Supplementary Conditions and General Requirements (if any), apply to the work specified in this Section.

1.02 DESCRIPTION OF WORK:

A. The work of this section includes furnishing all labor, materials, equipment to install, and test the pipe and related items required for this project. The pipe and related items shall be installed by the Contractor as indicated on the plans and as further specified in the specifications.

1.03 SUBMITTALS:

A. For materials furnished by the Contractor, submittals shall consist of catalog data and manufacturer's specification and engineering data.

1.04 STANDARDS:

A. All the products used in the construction that come in contact with drinking water shall meet the National Sanitation Foundation Standard 61 for Drinking Water System Components and applicable Ohio EPA Standards. The primary focus of these standards is on contaminants or impurities which may be imparted indirectly to drinking water. The products and/or materials covered include, but are not limited to, protective materials (coatings, linings, liners, etc.), joining and sealing materials (solvent cements, welding materials, gaskets, etc.), pipes and related products (pipes, tanks, fittings, etc.), and mechanical devices used in transmission/distribution systems (valves, etc.).

B. AWWA Standard C600 and C651 are incorporated into and considered a part of this Section.

PART 2 - PRODUCTS

2.01 DUCTILE IRON PIPE:

A. Ductile iron pipe (Interior): Ductile iron pipe used inside shall have ANSI 125 lb. drilled ductile iron flanges. The flanges shall be screwed on, power tightened and then faced giving a flush surface across the end of the pipe and the face of the flange. Fittings shall also be flanged. The pipe shall be 60-42-10 grade iron and shall be centrifugally cast, cement lined, seal-coated and manufactured in accordance with the latest revision of AWWA Standard C 115 and shall be asphalt seal-coated twice. The asphalt seal-coat to be such as not to impart taste or odor to the water contained therein. Ductile iron pipe used above finish floor grade shall be cleaned and shop primed on the outside with a rust inhibitive priming system.

B. Ductile Iron Pipe (Exterior): Ductile iron pipe used for exterior piping shall be 60-42-10 grade and shall be designed for Type 2 laying condition, as defined in the latest revision of AWWA Standard C 150, or as shown in the standard trench detail. The pipe is to have push-on joints (all fittings to have mechanical joints) and be centrifugally cast, bituminous coated, cement lined, seal-coated and manufactured in accordance with the latest revision of AWWA Standards C 150 and C 151.

C. Ductile iron pipe shall meet the following requirements: For 4-inch diameter, Pressure Class 350 (Class 51) shall be used. For sizes 6-inch through 16-inch diameter, Pressure Class 350 shall be used. For sizes 16-inch diameter and larger, Class 52 shall be used. Joint type shall be as indicated on the drawings. Flanged pipe shall be Class 53 (Pressure Class 350).

2.02 FITTINGS:

A. Ductile iron fittings with Corten bolts shall be used. All fittings, except those associated with the flange pipe systems, shall have mechanical joints. The fittings shall be designed in accordance with AWWA Standard C 110 or latest revision thereof, and have a rated working pressure of 250 psi. All exterior fittings are to be bituminous coated, cement lined and seal-coated as previously specified for ductile iron pipe. All interior fittings are to be prime coated as previously specified. Mechanical joint fittings shall be furnished with mega lug, or equal, restraint mechanical joint retainer glands. Fittings shall be of United States or Canadian manufacture. All MJ bolts shall be Corten meeting AWWA Standard C111. No cast iron bolts will be permitted.

2.03 ACCESSORIES:

A. Accessories such as gaskets, glands, bolts, nuts, etc., shall be furnished as required to make all piping systems complete.

2.04 VALVES:

A. GATE VALVES:

Gate valves shall be of the resilient wedge gate valve design, meeting or exceeding all requirements of the latest revision of AWWA C 509. The wedge shall consist of a ductile iron casting encased in a bonded-in-place nitrile elastomer covering which forms the resilient sealing surfaces. The valves shall be of the non-rising stem design with sealing accomplished by double "0" rings and shall open LEFT. All gate valves shall be designed for a minimum of 150 psi working pressure. Valves shall have mechanical joints and shall be epoxy or bituminous coated. Valves shall be U.S. Pipe, American Darling, or Company approved equal.

B. BUTTERFLY VALVES:

Butterfly valves shall conform to AWWA C504, except as modified herein. Valves shall be designed for tight shutoff against a differential pressure equal to a minimum 150 psi for the service indicated. The valve body shall be constructed of cast iron, ASTM A126, Class B. Two trunnions for shaft bearing shall be integral with the valve body. Discs shall be cast iron, ductile iron, Type 304 or 316 stainless steel. Seats bonded on the discs are not acceptable. Seats shall be Buna-N for liquids. Stuffing boxes shall be constructed of cast iron, ASTM A126. Gland assemblies shall be of cast bronze, ASTM B132. The packing gland shall be housed in a solid walled cast iron, ASTM A48, Class 40 one piece structure, or approved equal.

2.05 VALVE BOXES:

A. Each exterior valve shall be provided with a valve box. Valve boxes shall be cast iron and of the adjustable, screw type. The heavy pattern type must be used in areas where vehicular traffic can be expected. They shall be so designed and constructed as to prevent the direct transmission of traffic loads to the pipe or valve and shall be made by Pioneer, Quality Water Products, or Company approved equal.

B. The box shall be adjustable through at least 6" vertically without reduction of lap between sections to less than 4 in. The length shall be as necessary to suit the ground elevation. The inside diameter of the box shall be at least 5-1/4 in.

C. Covers shall be close fitting and substantially dirt-tight. The top of the cover shall be flush with the top of the box rim.

2.06 FLANGED ADAPTOR:

A, Flanged adaptor shall be Uniflange, manufactured by EBAA Iron Sales, Inc. of Eastland, Texas or similar type couplings as approved by the Company. Interior couplings shall have retainer rods according to the following schedule:

Pipe Dia.	No. of Rods	Rod Dia.
3	2	5/8"
4	2	5/8"
6	4	3/4"
8	4	3/4"
12	4	7/8"

2.07a COPPER TUBING

A. All copper tubing shall be Type K conforming to ASTM B88. Exterior pipe shall have compression fittings. All interior copper pipe shall be supported 5 feet on center by Grinnell Fig. CT-130 supports or Company approved equal.

2.07b HDPE TUBING:

A. All HDPE tubing shall be SIDR 7 conforming to ASTM D 2239. Exterior pipe shall have compression fittings. .

2.08 METER PITS:

A. Meter Pits shall be of PVC construction. Outlet connections shall be as required to suit the type of pipe or tubing connected. The pits shall be A.Y. McDonald or be a Company approved equal product.

2.09 HYDRANTS:

A. All material used in the production of fire hydrants for ordinary service shall conform to the specifications designated for each material listed in AWWA Standard C 502.

B. All hydrants shall be Mueller Company Super Centurion three way and unless otherwise specified by the company shall incorporate the following:

Traffic types at ground line
- 4.5' bury
- 6" mechanical joint
- 4-1/2" valve opening - valve to open left (counterclockwise)
- 2 - 2 1/2" NST hose nozzles
- 1 - 5-1/4" NST streamer nozzle
- 2" operating nut - pentagon shape
- 6" minimum inside barrel diameter

2.10 POLYETHYLENE ENCASEMENT TUBING:

A. Eight (8) mil thick polyethylene encasement tubing and tape for water pipe shall conform to AWWA Standard C 105.

2.11 CORPORATION STOPS

A. Corporation stops shall be of bronze with a lapped, ground key. Outlet connections shall be as required to suit the type of pipe or tubing connected. The stops shall be Ford or Mueller with CC thread inlet and compression outlet with I.P. thread under tube nut, or be a Company approved equal product.

PART 3 - EXECUTION

3.01 MATERIAL HANDLING:

A. All materials shall be stored and handled in accordance with the manufacturer's recommendations. The Contractor is responsible for replacing at his cost any pipe and/or material damaged during the course of unloading or construction.

B. Pipe Unloading: It is the responsibility of the Contractor to unload and string pipe. Pipe shall be lifted off the truck and placed on the ground with care to prevent damage to the pipe and the cement lined interior of the pipe. Rolling the pipe off the truck or dropping the pipe is prohibited. Pipe may be stacked, but no more than three layers high and only with proper blocking in between layers.

3.02 MATERIAL INSTALLATION:

A. Pipe Jointing: For exterior piping, all joints shall be made In a dry trench and in accordance with the manufacturer's recommendations and the best practices for class of pipe laid. The ends of the pipe shall be wiped clean with a dry cloth before making the joint.

B Pipe Laying:

1. Installation of ductile iron and PVC pipe shall be in accordance with the requirements of AWWA C 600 and AWWA C 605, respectively. The pipe shall be accurately laid to the line and grades to the satisfaction of the Owner. The line and grade may be adjusted by the Owner from that shown on the drawings to meet field conditions, and no extra compensation shall be claimed therefore.

2. All pipe shall be laid with a minimum of four feet and maximum of six feet of cover over the top of the pipe.

3. All pipe laid within 3 feet of a culvert or with less than 4.0 feet of cover shall be insulated with 2-inch 40 pound density styrofoam material. The insulation shall extend the width of the trench, a minimum of 4 feet, above the pipe envelope and on the vertical sides of the trench bottom from the bottom to above the pipe envelope. No pipe shall be laid with less than 4.0 feet of cover without prior approval of the Owner.

4. The deflection of alignment at a joint shall not exceed the appropriate permissible deflection, as specified in the tabulation titled PIPE DEFLECTION ALLOWANCES.

PIPE DEFLECTION ALLOWANCES

	DUCTILE IRON PIPE		PVC PIPE
	Maximum Permissible Deflection, In.*		
Size of Pipe (in.)	Push-on Joint	Mechanical Joint	Maximum Offset (in.) Per 18' Length Due to Pipe Curve
16	10	11	--
12	16	18	8
8	16	18	12
6	16	18	16

* Maximum permissible deflection for 18-ft. length, maximum permissible deflections for other lengths shall be in proportion of such lengths to 18 ft.

5. When mechanical joint, push-on joint, or similar pipe is laid, the bell of the pipe shall be cleaned of excess tar or other obstruction and wiped out before the cleaned and prepared spigot of the next pipe is inserted into it. The gasket, bell, and spigot shall be lubricated with gasket lubricating compound compatible with potable water. The new pipe shall be shoved firmly into place until properly seated and held securely until the joint has been completed. All pipe shall be pushed home by a method that protects the driving end of the pipe.

6. No pipe laying will be allowed to begin at any point other than a stub end or other appurtenance without the expressed consent of the Owner. If the Owner requires it, the interior of each length of pipe will be swabbed and

wiped clean before laying the next length. Whenever the work is stopped temporarily, or for any reason whatsoever, the end of the pipe shall be carefully protected against dirt, water, or other extraneous material. Bedding shall be as shown on the plans.

7. In areas where the Contractor's trenching operation exceeds the typical section, the Contractor may be required to use a higher strength class pipe in lieu of the designated class at no additional cost to the Owner.

D. Valve Installation: All valves shall be installed in accordance with the specifications for the pipe to which they are to be connected. Valve joints shall be made up in accordance with the Contract Drawings. The valves shall bear no stresses due to loads from the adjacent pipe. Valve shall be placed on solid concrete block with operating stem plumb. Wedges shall be used to prevent movement during backfill operation. The valve shall be operated completely before placement in the trench, and all factory installed bolts shall be checked for tightness. All valves shall be inspected before installation and they shall be cleaned and well lubricated before installed in the line.

E. Pipe Cutting:

1. Where required, sections of pipe may be cut to provide shorter sections of pipe necessary for the construction. The cutting of the pipe shall be done in accordance with the pipe manufacturer's recommendations and subject to the approval of the Company Inspector.

2. In general, the pipe material shall be cut by using a saw or milling process, approved by the pipe manufacturer. The pipe shall be cut, not broken. The cut end of the pipe shall be square to the axis of the pipe, any rough edges ground smooth, and beveled where being used for push-on joints.

F. Repair Clamps: Repair clamps are not considered as permanent repairs. If a section of main is found to be defective, it shall be cut out and a new section of ductile iron pipe shall be installed using solid cast couplings.

G. Hydrant Installation:

1. The hydrant valve shall be installed using a hydrant tee with a ductile iron rotatable MJ gland.

2. The hydrant shall be secured to the hydrant valve connecting piece with a ductile iron rotatable MJ gland on one end.

3. The MJ bolts shall be Corten.

4. The hydrant shall be set in true vertical alignment and shall be braced against undisturbed trench walls with hardwood or solid concrete blocks. Hydrants shall not be encased in poured cement in such a way that the bolts can not be removed.

5. No service connection shall be made between the distribution main and the hydrant along the hydrant lateral.

6. All hydrant installations shall be inspected by the Owner prior to backfilling.

7. Upon completion of the installation, the hydrant shall be painted with rust inhibiting paint, OSHA industrial white color for the barrel, and safety blue for the bonnet and caps.

8. In unfavorable soil conditions and at any time when so designated by the Owner, a concrete collar shall be placed below the surface around the hydrant barrel, as shown in AWWA Manual M17, to provide better resistance for traffic model hydrants.

3.02 SPECIAL REQUIREMENTS:

A. Pressure Pipe - Ductile Iron: Valves shall bear no stresses due to loads from the adjacent pipe.

B. Vertical Separation From Sanitary and Storm Sewer: Whenever water mains must cross sewers, the main shall be laid at such an elevation that the top of sewer is at least 18 inches below the bottom of the water main. When the elevation of the sewer cannot be buried to meet the above requirements, protection shall be provided as follows:

1. A vertical separation of at least 18 inches between the bottom of the sewer and the top of the water main.

2. Adequate structural support for the sewers to prevent excessive deflection of joints and settling on and breaking the water main.

3. That one full length of water pipe be centered at the point of crossing so that the joints will be equal distance and as far as possible from the sewer.

C. Parallel Separation from Sanitary and Storm Sewer: Water mains shall be laid at least 10 feet horizontally, edge to edge, from sewers or sewer manholes. When conditions do not permit a horizontal separation of 10 feet, a water main may be laid closer to a sewer provided that:

1. The bottom of the water main is at least 18-inches above the top of the sewer and a minimum of 5 feet edge to edge horizontally.

2. Where this 18-inch vertical separation can not be obtained, the sewer shall be constructed of materials and with joints that are equivalent to water main standards of construction and shall be pressure tested to assure water tightness prior to backfilling.

D. Assembling Mechanical Joints: Mechanical joints shall be assembled in accordance with manufacturer specifications, pipes shall be parallel in line with each other as joint is assembled. Surfaces against which the gasket will come In contact shall be thoroughly brushed with a wire brush prior to assembly of the joint. The gasket shall be cleaned. The gasket, bell, and spigot shall be lubricated by using gasket lubricating compound compatible with potable water. The spigot shall be inserted into the bell until it is correctly seated. The gasket shall then be seated evenly in the bell at all points, centering the spigot, and the gland shall be pressed firmly against the gasket. After all bolts have been inserted and the nuts have been made up finger-tight, diametrically opposite nuts shall be progressively and uniformly tightened all around the joint to the proper tension by means of a torque wrench. Mechanical joints shall be assembled with mechanical joint restraint glands, megalugs or approved equal.

1. The correct range of torque as indicated by a torque wrench and the length of wrench, shall not exceed the values specified in the tabulation titled TORQUE RANGE VALUES.

TORQUE RANGE VALUES

Range of torque 75-90 ft. - lb.

Mechanical joint bolts shall be retorqued to a range of 75 to 90 ft.-lb. after waiting a period of two hours.

If effective sealing of the joint is not attained at the maximum torque indicated above, the joint shall be disassembled and thoroughly cleaned, then reassembled. Bolts shall not be overstressed to tighten a leaking joint.

E. THRUST BLOCKS: Thrust blocks of concrete of adequate size and weight shall be used on all pressure piping for all bends including and in excess of 11 1/4 degrees. Minimum thrust blocking size shall be as shown on the standard details or shall be determined by the soil characteristics and bearing capacities as shown on the following table, whichever is larger:

Horizontal Bearing Strengths

*Bearing Strength

Soil	**S_b(lb/ft^2)**
Muck	0
Soft Clay	1,000
Silt	1,500
Sandy Silt	3,000
Sand	4,000
Sandy Clay	6,000
Hard Clay	9,000

* Although the above bearing strength values have been used successfully in the design of thrust blocks and are considered to be conservative, their accuracy is totally dependent on accurate soil identification and evaluation. The ultimate responsibility for selecting the proper bearing strength of a particular soil type must rest with the design engineer.

F. POLYETHYLENE ENCASEMENT TUBING: Eight (8) mil thick polyethylene encasement tubing shall be installed on all ductile iron water pipe as set forth in the instruction in AWWA Standard C105 and recommended by DIPRA. All valves, fittings and appurtenance shall also be wrapped and taped in a similar fashion.

3.03 FIELD TESTING OF PRESSURE PIPE:

A. The Contractor shall perform pressure and leakage tests under Company supervision, according to the requirements set forth below.

B. The duration of the pressure test shall be at least two hours duration. For PVC pipe, the test pressure shall be double the operating pressure at the lowest elevation of the system or the class designation of the pipe plus 50 psi, whichever is lesser. For ductile iron pipe, the test pressure shall be 1.5 times the working pressure at the lowest point, and not less than 150 psi.

C. The allowable leakage for **Ductile Iron Pipe** may be determined by the formula:

$$\frac{L = S*D*\text{sqrt}(p)}{133{,}200}$$

**where L is the allowable leakage in gallons per hour, S is the length of pipe in feet, D is the nominal diameter in inches, and p is the average test pressure in psi.*

D, The allowable leakage for **PVC pressure** pipe may be determined by the formula:

$$\frac{L = N*D*\text{sqrt}(p)}{3700}$$

**where L is the allowable leakage in gallons per hour, N is the number of joints, D is the nominal diameter in inches, and p is the average pressure in psi.*

For convenience, the following table may be used to estimate allowable leakage for ductile iron pipeline installations:

DIPRA RECOMMENDED ALLOWABLE LEAKAGE PER 1000' OF PIPELINE*
(GALLONS PER HOUR)
Avg. Test

Pressure	NOMINAL PIPE DIAMETER - INCHES						
PSI	2	4	6	8	10	12	16
450	0.29	0.64	0.95	1.27	1.59	1.91	2.55
400	0.27	0.60	0.90	1.20	1.50	1.80	2.40
350	0.25	0.56	0.84	1.12	1.40	1.69	2.25
300	0.23	0.52	0.78	1.04	1.30	1.56	2.08
275	0.22	0.50	0.75	1.00	1.24	1.49	1.99
250	0.21	0.47	0.71	0.95	1.19	1.42	1.90
225	0.20	0.45	0.68	0.90	1.13	1.35	1.80
200	0.19	0.43	0.64	0.85	1.06	1.28	1.70
175	0.18	0.40	0.59	0.80	0.99	1.19	1.59
150	0.18	0.37	0.55	0.74	0.92	1.10	1.47
125	0.15	0.34	0.50	0.67	0.84	1.01	1.34
100	0.14	0.30	0.45	0.60	0.75	0.90	1.20

**For mechanical or push-on joint pipe with 18-ft. nominal lengths. To obtain the recommended allowable leakage for pipe with 20-ft. nominal lengths, multiply the leakage calculated from the above table by 0.9.*

****If the pipeline under test contains sections of various diameters, the allowable leakage will be the sum of the computed leakage for each size.***

3.04 DISINFECTION OF WATER MAINS (Refer to AWWA Standard C651)

A. Disinfection: The disinfection and hydrostatic testing operation can be combined provided that suitable amounts of dry hypochlorite are deposited near each pipe joint as it is laid to make up the required solution strength (25/mg/l) following filling of the pipeline for testing purposes. This test procedure shall not be used if trench water or foreign materials has entered the main or if the water is below 40°F.

****A quantity of calcium hypochlorite granules shall be placed at the upstream end of the first section of pipe, at the upstream end of each branch main, and at 500 foot intervals. The quantity of granules used shall be as shown in Table 1.***

WARNING: THIS PROCEDURE MUST NOT BE USED WITH SOLVENT-WELDED PLASTIC OR SCREWED-JOINT STEEL PIPE.

Table 1

Dia. of Pipe (in.)	Calcium Hypochlorite Granules (oz.)
4	0.5

6	1.0
8	2.0
12	4.0
16 and Larger	8.0

**Dry HTH (calcium hypochlorite) tablets are to be placed in each section of pipe and also one such tablet shall be placed in each hydrant, hydrant branch, and other appurtenance. Number of HTH tablets required per length of pipe is as noted in Table 2 below. The tablets shall be attached by an adhesive such as Permatex No. 1 or equal. There shall be no adhesive on the tablet except on the broad side attached to the surface of the pipe. Attach all tablets inside and at the top of the main, with approximately equal numbers of tablets at each end of a given pipe length. If the tablets are attached before the pipe section is placed in the trench, their position shall be marked on the section so it can be readily determined that the pipe is installed with the tablets at the top.*

Table 2

Length of	**Diameter of Pipe (in.)**						
Section (feet)	**2**	**4**	**6**	**8**	**10**	**12**	**16**
13 or less	1	1	1	1	2	3	4
18	1	1	1	2	3	4	6
20	1	1	1	2	3	4	7

**After a satisfactory hydrostatic test and allowing the chlorinated water to remain in the pipe for at least 24 hours, the line shall be flushed as described below. If the water temperature is less than 41°F (5°C), the water shall remain in the pipe for at least 48 hours. During this test period, all newly installed valves and hydrants shall be operated to thoroughly disinfect all moving internal parts.*

B. Flushing Procedures:

1. After the chlorinated water has been retained for the required time, the treated water shall then be thoroughly flushed from the newly laid pipeline at its extremities until the replacement water throughout its length shall, upon test show a residual chlorine content of not more than 1 ppm as tested by the Water Company.

2. Water samples taken from the test section following completion of the disinfection procedure described above shall show no coliform count in 2 consecutive 100 ml samples. Should the initial treatment fail to result in the conditions specified in the above paragraphs, an alternate disinfection procedure shall be used as directed by the Water Company Chemist.

3 .The environment to which the chlorinated water is to be discharged shall be inspected. If there is any question that the chlorinated water discharge will cause damage to the environment, the Contractor must consult with the governing authority(s) on how to dispose properly. The Contractor must then provide written validation to the method of disposal to the Owner before disposal can be made. All coordination and disposal of chlorinated water is the burden of the Contractor and not the Owner.

4. All expenses and costs incurred in carrying out the specified disinfection work, including the furnishing the calcium hypochlorite granules and tablets, shall be borne by the Contractor at no extra cost to the Water Company.

C. Alternate Test Procedure: An alternate test procedure, as approved by the Water Company, may be used if the above described procedure is not used. Such alternate is described in Section 5.2 of AWWA C 651-86.

3.05 ACCEPTANCE:

A. The Owner reserves the right to accept the mains in section after the satisfactory tests have been made and approved, and to make full use of any part or parts of the system after acceptance of those parts.

B. Until such time as the entire contract has been accepted by the Owner, the Contractor shall be held responsible to rectify any leaks, errors, or other poor workmanship which may be discovered and shall make an necessary repairs, alterations, or adjustments as may be required to properly complete the work, as directed by the Owner at his own expense

-END OF SECTION-

SECTION 02610
PAVING AND SURFACING

PART 1: GENERAL

1.01 DESCRIPTION

A. The CONTRACTOR shall provide all labor, tools, material and equipment to replace pavement, curbs, drives and walks that have been damaged or disturbed during the course of the work, all as specified herein, as directed by the OWNER, or as required by local, state or federal regulations. Placement will be at least equal to the type of pavement, curb, drive, or walk which existed before the work began and to the satisfaction of the OWNER.

B. During the entire period of construction of the project, all streets, curbs, drives and walks shall be kept in usable and safe conditions for public use. Before final acceptance, and after trench settlement has been corrected to the satisfaction of the OWNER, pavement, curbs, drives and walks designated by the ONWER shall be replaced with the type of replacement specified herein.

C. The CONTRACTOR, where directed by the OWNER, shall furnish all labor, tools, material, and equipment necessary to spread and roll and/or tamp temporary bituminous pavement, complete, in place, and shall maintain the same all as specified or directed.

PART 2: PRODUCTS

2.01 MATERIALS

A. Materials of construction for paving, curbing, and surfacing shall be furnished in accordance with applicable Federal, State and local standards. The CONTRACTOR shall use materials which comply to **ODOT** Standards.

PART 3: EXECUTION

3.01 INSTALLATION

A. Where necessary to disturb the existing pavement, the pavement will saw or line cut, as required by local, State or Federal regulations, and the edges of the face of the old pavement or base shall be left vertical. Ragged edges shall be trimmed so as to provide a substantially straight line juncture between the old and new surfaces.

B. The pavement replacement shall be so placed as to conform in grade to the existing streets, drives or sidewalks.

C. The type of pavement replacement shall be as shown on the pavement replacement details in accordance with applicable Federal, State or local standards. If there are no such applicable standards, replacement will be made to the satisfaction of the OWNER.

D The finished temporary surface shall be flush with the adjacent undisturbed surface and the CONTRACTOR shall maintain the temporary surface until the temporary surface is replaced.

E. Before the completion of each day's work, in traveled areas, the pipe trench shall be paved with 6" of stabilized base unless another method of pavement restoration is required by the authorized governing body. Final paving shall be placed over the stabilized base and overlapping each side of the trench a minimum of 12" and feathered to meet the existing pavement unless another method of pavement restoration is required by the authorized governing body. Final pavement shall not be placed within 20 days after the backfilling has been completed and shall be placed no longer than 45 days after the backfilling has been completed, unless otherwise ordered by the OWNER.

3.02 MAINTENANCE

A. Following the certification of completion by the OWNER, the CONTRACTOR shall maintain the surfaces of curbs and gutters, paved surfaces and sidewalks for a period of one year thereafter, or for such greater period as may be required by Federal, State or local authorities. All material and labor required for such maintenance shall be supplied by the CONTRACTOR, and the work shall be done in a manner satisfactory to the OWNER at no additional cost to the OWNER.

-END OF SECTION-

SECTION 02901 - SODDING, SEEDING AND MULCHING

PART 1 - GENERAL

1.1 RELATED DOCUMENTS

A. Drawings and general provisions of Contract, including General and Supplementary Conditions and Division-1 Specification sections, apply to work of this section.

1.2 DESCRIPTION OF WORK

A. Installation of seeded and sodded areas shall include all areas which are disturbed as a result of the construction process and shall include supplying all seed, sod, soil conditioning materials, mulching materials and watering and the incorporation of these materials into the work as specified.

B. The Contractor shall place stockpiled topsoil in those areas requiring seeding or sod. If the quantity of stockpiled topsoil is insufficient, the Contractor shall furnish and install additional topsoil as required to complete the work.

1.3 QUALITY ASSURANCE

A. Any subcontract restoration shall be to a qualified firm specializing in landscape work.

B. Topsoil: Before delivery of topsoil, furnish Architect/Engineer with written statement giving location of properties from which topsoil is to be obtained, names and addresses of owners, depth to be stripped, and crops grown during past 2 years.

Contractor shall have a soils test done at his expense and analyzed by an approved testing agency, to determine soil amendments for topsoil and provide a copy to the Engineer prior to the start of fine grading.

C. Seed: All seed specified shall meet the current specifications of O.D.O.T. as to the percentage purity, weed seed, and germination. All seed shall be approved by the State of Ohio, Department of Agriculture, Division of Plant Industry and shall meet the requirements of these specifications.

Contractor shall provide the Engineer with a list of the seed he intends to use, including, varieties of seed, labels, and suppliers name and phone number, four (4) weeks prior to the start of seeding, for approval.

D. Sod: All sod shall meet the current specifications of O.D.O.T. for percentage of weeds.

The Contractor shall provide the Engineer with the following information from the sod supplier: the name of the producer, the location of sod field, the date the sod was cut and the thickness the sod was cut.

1.4 DELIVERY, STORAGE, AND HANDLING

A. Packaged Materials: Deliver packaged materials in containers showing weight, analysis, and name of manufacturer. Protect materials from deterioration during delivery, and while stored at site.

1.5 JOB CONDITIONS

A. Utilities: Determine location of underground utilities and perform work in a manner which will avoid possible damage. Hand excavate, as required. Maintain grade stakes set by others until removal is mutually agreed upon by parties concerned.

B. Excavation: When conditions detrimental to plant growth are encountered, such as rubble fill, adverse drainage conditions, or obstructions, notify Engineer before planting.

C. Soil Stabilization: The Contractor shall provide permanent or temporary soil stabilization to denuded areas within seven days after final grade is reached on any portion of the site. Any such area which will not be regraded for longer than seven days shall also be stabilized. Soil stabilization includes any measures which protect the soil from the erosive forces of raindrop impact and flowing water. Applications include seeding and or mulching. The Contractor shall consider time of year, site conditions and estimated time of use for the project. If necessary, the Contractor shall coordinate soil stabilization practices with the local Soil and Water Conservation District.

D. All work shall be guaranteed for one full growing season to commence upon final acceptance of lawn work.

E. Spring-sown work shall be installed between April 1st and May 30th and Fall-sown work shall be installed between September 1st and October 15th. No permanent seeding shall take place between May 30th and September 1st and between October 15th and April 1st. The dates for seeding may be changed at the discretion of the Architect/Engineer.

PART 2 - PRODUCTS

2.1 TOPSOIL

A. Topsoil shall be furnished by the Contractor. Stockpiled material, if any, shall be utilized prior to obtaining additional topsoil.

B. New topsoil shall conform to the U.S. Department of Agriculture soil texturing triangle. Screen topsoil from clay lumps, brush, weeds, litter, roots, stumps, stones larger than 1/2 inch in any dimension, and any other extraneous or toxic matter harmful to plant growth.

Obtain topsoil only from naturally well drained sites where topsoil occurs in a depth of not less than 4 inches. Do not obtain from bogs or marshes.

C. Soil amendments shall be added according to the soils test requirements. Amendments can include, but are not limited to fertilizer, lime, compost and organic matter.

2.2 SEED

A. Seed shall be vendor mixed, delivered in original bags and shall be proportioned as follows unless otherwise noted on the plans:

Common Name	Proportion by Weight
Kentucky Bluegrass	40%
Penn Lawn Fescue	40%
Perennial Rye	20%

1. Supplier's name and analysis of seed is to be submitted to the Engineer.

2.3 MULCH

A. Mulch shall be clean straw free of seed and weed seed.

B. If hydroseeding is used, wood fiber mulching material may be used and shall consist of virgin wood fibers manufactured expressly from whole wood chips and shall conform to the following specifications.

- Moisture content	10.0% ± 3.0%
- Organic content	99.2% ± 0.8% O.D. Basis
- pH	4.8 ± 0.5
- Water holding capacity, minimum (grams of water per 100 grams of fiber)	1,000

Wood fiber mulching material shall be processed in such a manner as to contain no growth or germination inhibiting factors, and must contain a biodegradable green dye to aid in visual metering during application.

2.4 SOD

A. Sod shall be well-rooted Kentucky Blue Grass (Poa pratensis) blend grown on a mineral soil and obtained from a commercial sod nursery. Sod shall be free of all noxious weeds such as wild mustard, thistles, quack grass, etc. and reasonably free from dandelions and crabgrass.

B. Sod shall have been recently mowed to a height of not more than 2 inches and shall be cut in strips not less than 3 feet long nor more than 6 feet long and shall be cut in a uniform width of not over 18 inches.

C. Sod shall be delivered to the job within 24 hours after being cut and shall be installed within 36 hours after being cut.

D. During wet weather the sod shall be allowed to dry sufficiently to prevent tearing during handling and placing and during dry weather have been watered before lifting to insure its vitality and to prevent dropping off of soil during handling.

PART 3 - EXECUTION

3.1 PREPARATION - GENERAL

A. A soils test of the topsoil shall be done by the Contractor at his expense. A copy of the test shall be submitted to the Engineer.

B. Rough grading must be approved prior to placing topsoil.

C. Loosen subgrade of lawn areas. Remove any stones greater than 1 inch in any dimension. Remove sticks, roots, rubbish, and other extraneous matter.

D. Spread topsoil to a minimum depth of 4 inches, to meet lines, grades, and elevations shown on plan, after light rolling and natural settlement. Remove sticks, roots, rubbish, stones greater than 1/2" in any dimension, and other extraneous matter. Topsoil shall be tilled thoroughly by plowing, discing, harrowing, or other approved methods. Add specified soil amendments and mix thoroughly into the topsoil.

E. Preparation of Unchanged Grades: Where seed or sod is to be planted in areas that have not been altered or disturbed by excavating, grading, or stripping operations, prepare soil for planting as follows: Till to a depth of not less than 6 inches. Apply soil amendments and initial fertilizers as specified. Remove high areas and fill in depressions. Till soil to a homogenous mixture of fine texture, free of lumps, clods, stones, roots and other extraneous matter. Soils test requirements apply here as well.

1. Prior to preparation of unchanged areas, remove existing grass, vegetation and turf. Dispose of such material outside of project limits. Do not turn existing vegetation over into soil being prepared for seed or sod.
   If necessary, supply and install topsoil in areas where there is no topsoil left after vegetation has been removed in conformance to Section 2.01.
2. Allow for sod thickness in areas to be sodded.
3. Apply specified soil amendments at rates specified in the soils test and thoroughly mix into upper 2 inches of topsoil. Add topsoil if existing grade has less than 4" of topsoil. Delay application of amendments if planting will not follow within a few days.

F. Fine grade areas to smooth, even surface with loose, uniformly fine texture. Roll, rake, and drag lawn areas, remove ridges and fill depressions, as required to meet finish grades. Remove sticks, roots, rubbish, stones greater than 1/2" in any dimension, and other extraneous matter. Limit fine grading to areas which can be planted immediately after grading.

G. Moisten prepared areas before planting if soil is dry. Water thoroughly and allow surface moisture to dry before planting lawns. Do not create a muddy soil condition.

H. Restore areas to specified condition, if eroded or otherwise disturbed, after fine grading and prior to planting.

3.2 SEEDING

A. Do not use wet seed or seed that is moldy or otherwise damaged in transit or storage. Seed shall not be sown when the ground is frozen, muddy, or when weather conditions prevent proper soil preparation, interference with sowing and/or proper incorporation of seed into the soil.

B. Sow seed using a spreader or hydroseeder. Do not seed when wind velocity exceeds 5 miles per hour. Distribute seed evenly over entire area by sowing 2 1/2 lbs. per 1000 s.f. at right angles to each other. Total amount to equal 5 lbs. per 1000 s.f. unless otherwise altered by the plans or Engineer.

C. Mulch shall be spread uniformly to form a continuous blanket at a rate of 100 lbs. per 1,000 s.f. Mulch shall be 1 1/2" loose measurement over seeded areas.

Anchor mulch using an O.D.O.T. specified SS-1 at 60 gal./ton non-toxic tackifier such as Hydro-stik, or equal, or by securing with a netting such as Conwed, or equal.

D. Unless otherwise directed by the Architect/Engineer, the seeded area shall be watered, as soon as the seed is covered, at the rate of 120 gallons per 1000 square feet. The water shall be applied by means of a hydro-seeder or a water tank under pressure with a nozzle that will produce a spray that will not dislodge the mulching material. Cost of this watering shall be included in the cost of seeding and mulching.

E. Contractor has the option to hydroseed large lawn areas, using equipment specifically designed for such application. The rate of application of wood fiber mulching materials is 40 lbs./1,000 s.f. The Contractor shall submit data regarding the hydroseed mixture, mulch and application rates for the Engineer's review and approval prior to performing the work. Contractor shall not hydroseed within close proximity to buildings and structures when unfavorable wind conditions may blow the hydroseed material onto the structure.

3.3 DORMANT SEEDING METHOD

A. Seeding shall not take place from October 15 through November 20. During this period prepare the seed bed, add the required amounts of lime and fertilizer. Then mulch and anchor.

B. From November 20th through April 1st, when soil conditions permit, prepare the seed bed, lime and fertilize, apply the selected seed mixture, mulch, and anchor. Increase the seeding rate by 50 percent.

3.4 SODDING

A. Do not plant dormant sod or place if ground is frozen or extremely wet.

B. Lay sod to form a solid mass with tightly fitted joints. Butt ends and sides of sod strips; do not overlap. Stagger strips to offset joints in adjacent courses. Work from boards to avoid damage to subgrade or sod. Tamp or roll lightly to ensure contact with subgrade. Work sifted soil into minor cracks between pieces of sod; remove excess to avoid smothering of adjacent grass. Anchor sod on slopes with wood pegs to prevent slippage.

C. Water sod thoroughly with a fine spray immediately after planting.

D. Upon completion, the surface of the sod shall coincide with the finished grade.

3.5 RECONDITIONING EXISTING LAWNS

A. A soils test shall be required for existing lawns prior to any reconditioning. The soils test shall be done at the Contractors expense. A copy shall be submitted to the Engineer prior to starting.

B. Recondition all existing lawn areas damaged by Contractors operations including storage of materials and equipment and movement of vehicles. Also recondition existing lawn areas where minor regrading is required.

C. Provide soil amendments as called for in the soils test.

D. Provide new topsoil, as required, to fill low spots and meet new finish grades.

E. Cultivate bare and compacted areas according to the topsoil specifications.

F. Remove diseased and unsatisfactory lawn areas; do not bury into soil. Remove topsoil containing foreign materials resulting from the Contractor's operations, including oil drippings, stone, gravel, and other loose building materials.

G. All work shall be the same as for new seeding or sodding.

H. Water newly planted seed or sod areas. Maintenance of reconditioned lawns shall be the same as maintenance of new lawns.

3.6 ESTABLISHMENT

A. Maintain work areas as long as necessary to establish a uniformly close stand of grass over the entire lawn area. A uniformly close stand of grass is defined as the seeded areas having 90%+ coverage of grass at 60 days after seeding. 90%+ coverage is defined as very little or no dirt showing when seeded area is viewed from directly overhead.

B. Maintain lawns by watering, fertilizing, and other operations such as rolling, regrading and replanting as required to establish an acceptable stand of vegetation.

1. Refertilizing

   a. Distribute fertilizer on the seeded area between August 15 and October 15, during the period when grass is dry. The fertilizer shall be as specified in the soils test.

2. Reseeding

   a. Reseed with the seed specified for the original seeding, and at the rate of 4 lbs. per 1,000 s.f. in a manner which will cause minimum disturbance to the

existing stand of grass and at an angle of not less than 15 degrees from the direction of rows of prior seeding.

3. Resodding

   a. Resodding shall be with sod as herein specified. Trenches shall be filled and resodded.

4. Watering

   a. The Contractor shall keep all work areas watered daily to achieve satisfactory growth unless otherwise approved by the engineer in writing. Water shall be applied at a rate of 120 gallons(m) per 1000 square feet. If water is listed as a pay item, it shall be separately paid for based on the actual amount of water used, measured in thousands of gallons. If there is no pay item for watering, then the contractor shall include the price of watering in the price per square yard of seeding or sodding.

5. Any mulching which has been displaced shall be repaired immediately. Any seed work which has been disturbed or damaged from the displacement of mulch shall be repaired prior to remulching.

3.7 INSPECTION AND ACCEPTANCE

A. When seeding or sodding work is complete and an acceptable stand of growth is attained, the Contractor shall request the Engineer to make an inspection to determine final acceptance.

B. Acceptance shall be based upon achieving a vigorous uniformly stand of the specified grasses. If some areas are satisfactory and some are not, acceptance may be made in blocks, provided they are definable or bounded by readily identified permanent surfaces, structures, or other reference means. Partial acceptance decisions may be made by the Engineer and will be for no less than 75% of the total job. Excessive fragmentation into accepted and unaccepted areas shall be avoided. Unaccepted areas shall be maintained by the Contractor until acceptable.

C. No payment shall be made until areas are accepted.

D. All seeded/sodded areas shall be guaranteed for one full growing season to commence upon final acceptance of the areas.

END OF SECTION 02901 5/97

SECTION 03301
CONCRETE

PART 1 - GENERAL:

1.01 DESCRIPTION:

A. Codes and Standards: ACI 301 "Specifications for Structural Concrete for Buildings"; ACI 347 "Recommended Practice for Concrete Formwork"; ACI 304 "Recommended Practice for Measuring, Mixing, Transporting and Placing Concrete"; comply with applicable provisions except as otherwise indicated.

B. Use air-entrained admixture in all concrete, providing not less than 4% nor more than 8% entrained air for concrete exposed to freezing and thawing, and from 2% to 4% for other concrete.

PART 2 -PRODUCTS:

2.01 MATERIALS:

A. Portland Cement: ASTM C150, Type as required.

B. Aggregates: ASTM C33, except local aggregates of proven durability may be used when acceptable to Engineer.

C. Water: Clean, drinkable.

D. Air-Entrained Admixtures: ASTM C260.

E. Membrane-forming Curing Compound: ASTM C309, Type I.

F Form Materials: Provide form materials with sufficient stability to withstand pressure of placed concrete without bow or deflection.

G. Ready-Mix Concrete: ASTM C94.

PART 3 -EXECUTION:

3.01 INSTALLATION:

A. Formwork: Construct so that concrete members and structures are of correct size, shape, alignment, elevation, position, complying with ACI 347.

B. Concrete Placement: Comply with ACI 304, placing concrete in a continuous operation within planned joints or sections.

Consolidate placed concrete using mechanical vibrating equipment with hand rodding and tamping, so that concrete is worked around reinforcement and other embedded items and into all parts of forms.

In cold weather comply with ACI 306.

C. Class A concrete shall be used, with a minimum compressive strength of 4000 psi after 28 days.

D. Curing: Begin initial curing as soon as free water has disappeared from exposed surfaces. Where possible, keep continuously moist for not less than 72 hours. Continue curing by use of moisture-retaining cover or membrane-forming curing compound. Cure formed surfaces by moist curing until forms are removed. Provide protection as required to prevent damage to exposed concrete surfaces.

-END OF SECTION-

SECTION 03309

CONCRETE - UNREINFORCED

PART 1 - GENERAL:

1.01 DESCRIPTION:

A. Codes and Standards: ACI 301 "Specifications for Structural Concrete for Buildings"; ACI 347 "Recommended Practice for Concrete Formwork"; ACI 304 "Recommended Practice for Measuring, Mixing, Transporting and Placing Concrete"; comply with applicable provisions except as otherwise indicated.

B. Minimum Strength: Concrete for thrust blocks shall be a minimum of 3000 psi.

C. Concrete Testing Service: The Contractor will employ a separate testing lab to evaluate concrete delivered to and placed at the site.

D. Quality Control: If deemed necessary by the Owner, the Contractor's testing lab will perform sampling and testing during concrete placement, which may include the following as directed by the Owner:

1. Sampling: ASTM C172

2. Slump: ASTM C143, one test for each load at point of discharge.

3. Air Content: ASTM 173, one for each set of compressive strength specimens.

4. Compressive Strength: ASTM C39, one set for each 50 cubic yards or fraction thereof of each class of concrete; 2 specimens tested at 7 days, 2 specimens tested at 28 days, and one retained for later testing if required.

When the total quantity of a given class of concrete is less than 50 cubic yards, the strength tests may be waived by the Owner if field experience indicates evidence of satisfactory strength.

Test results will be reported in writing to the Owner, Contractor and concrete producer on same day that tests are made.

1.02 SUBMITTALS:

A: Mix Proportions and Design: Proportion mixes by either laboratory trail batch or field experience method complying with ACI 211.1.

Submit written report to Owner for each proposed concrete mix at least 15 days prior to start of work. Do not begin concrete production until mixes have been reviewed and are acceptable to the Owner.

Mix designs may be adjusted when material characteristics, job conditions, weather, test results, or other circumstances warrant. Do not use revised concrete mixes until submitted to and accepted by the Owner.

Use air-entrained admixture in all concrete, providing not less than 4% nor more than 8% entrained air for concrete exposed to freezing and thawing, and from 2% to 4% for other concrete.

PART 2 -PRODUCTS:

2.01 MATERIALS:

A. Portland Cement: ASTM C150, Type as required.

B. Aggregates: ASTM C33, except local aggregates of proven durability may be used when acceptable to Engineer.

C. Water: Clean, drinkable.

D. Air-Entrained Admixtures: ASTM C260.

E. Water-Reducing Admixture: ASTM C494. Only use admixtures which have been tested and accepted in mix designs, unless otherwise acceptable.

F. Membrane-forming Curing Compound: ASTM C309, Type I.

G. Form Materials: Provide form materials with sufficient stability to withstand pressure of placed concrete without bow or deflection.

H. Ready-Mix Concrete: ASTM C94.

PART 3 -EXECUTION:

3.01 MATERIALS:

A. Formwork: Construct so that concrete members and structures are of correct size, shape, alignment, elevation, position, complying with ACI 347.

Provide openings in formwork to accommodate work of other trades. Accurately place and securely support items built into forms.

Clean and adjust forms prior to concrete placement. Apply form release agents or wet forms as required. Retighten forms during and after concrete placement if required to eliminate mortar leaks.

B. Installation of Embedded Items: Set and build into the work anchorage devices and other embedded items required for the work that is attached to, or supported by cast-in-place concrete. Use setting diagrams, templates, and instructions provided by others for locating and setting.

C. Concrete Placement: Comply with ACI 304, placing concrete in a continuous operation within planned joints or sections. Do not begin placement until work of other trades affecting concrete is completed.

Consolidate placed concrete using mechanical vibrating equipment with hand rodding and tamping, so that concrete is worked around reinforcement and other embedded items and into all parts of forms.

Protect concrete from physical damage or reduced strength due to weather extremes during mixing, placement, and curing.

In cold weather comply with ACI 306.

In hot weather comply with ACI 305.

D. Curing: Begin initial curing as soon as free water has disappeared from exposed surfaces. Where possible, keep continuously moist for not less than 72 hours. Continue curing by use of moisture-retaining cover or membrane-forming curing compound. Cure formed surfaces by moist curing until forms are removed. Provide protection as required to prevent damage to exposed concrete surfaces.

-END OF SECTION-

SECTION 6
STANDARD SPECIFICATIONS

STANDARD SPECIFICATIONS

1. The "Construction and Material Specifications" of the State of Ohio Department of Transportation (ODOT), 2013 edition, current ODOT supplemental specifications, and current ODOT standard drawings shall govern work and materials which are not specified or modified herein or on the project Contract Drawings. All references to "the Department" shall be changed to "the Owner or his Representative." The project Contract Drawings and Specifications, in the event of a discrepancy, shall supersede the ODOT Specifications.

   The absence of an “As Per Plan” designation on some item descriptions in the proposal for which there are clear and controlling plan notes, specifications, or other requirements does not relieve the Contractor of the responsibility to read, bid and construct those particular items in accordance with the governing plan notes, specifications, or other requirements and the Contractor shall have no basis of claim based upon an “order of precedence”.

SECTION 7
SPECIFIC PROJECT REQUIREMENTS

SPECIFIC PROJECT REQUIREMENTS

1 - CONTACT DURING BIDDING

1.1 All questions during bidding should be addressed to Brian Ashurst, who can be reached at the City of Mentor, 8500 Civic Center Boulevard, Mentor, Ohio 44060 at (440) 974-5785, extension 2612.

2 - INSURANCE

2.1 Section SC-5.04(D) of the Supplementary Conditions shall be deleted and no "all risk builders risk" or "installation floater" insurance need be purchased by the Contractor.

3 - WORKING HOURS

3.1 Work shall be performed between the hours of 8:00 AM and 5:00 PM, Monday through Friday. No work shall be performed on Saturday, Sunday, or legal Holidays, without written permission of the Owner.

4 - PROJECT COMPLETION

4.1 All work including restoration and clean-up shall be completed no later than the contract completion date. Failure to complete all work within the allotted time will result in assessment of liquidated damages. Upon completion of all work and written notification of same by the Contractor, the Engineer and Owner will compile a punch list. The punch list will be sent to the Contractor. All punch list work shall be completed to the satisfaction of the Engineer and the Owner within fourteen (14) days after receipt of the punch list. Failure to complete the punch list work within the allotted time will result in assessment of liquidated damages.

5 - TAXES

5.1 The Contractor shall pay and/or withhold all consumer, use employment and other taxes (including the City of mentor 2% income tax) paid or withheld by the Contractor in accordance with the Laws and Regulations of the United States, State of Ohio and City of Mentor which are applicable during the performance of the work.

6 – BACKFILL UNDER PROPOSED PAVEMENT

5.1 The Contractor shall provide premium backfill over the proposed waterline in areas where pavement will be installed as well as the zone of influence for the pavement. Refer to Trench and Bedding Detail, 2009, City of Mentor note number 5 for specific requirements in Section 9, Drawings.

SECTION 8
WAGE RATES

PREVAILING WAGES

The Contractor agrees that each individual employed by the Contractor or any Subcontractor and engaged in work on the project under this contract shall be paid the prevailing wage established by the Department of Industrial Relations of the State of Ohio (www.com.ohio.gov/dico/). This shall occur regardless of any contractual relationship which may be said to exist between the Contractor or any Subcontractor and such individual.

The Prevailing Wage Determination Schedule for this project is attached. If the Contractor needs a wage determination for any trade not included herein, he shall contact the Owner's Prevailing Wage Coordinator.

Prevailing Wage Determination Cover Letter

County: -Select-
Determination Date: 10/27/2016
Expiration Date: 01/27/2017

THE FOLLOWING PAGES ARE PREVAILING RATES OF WAGES ON PUBLIC IMPROVEMENTS FAIRLY ESTIMATED TO BE MORE THAN THE AMOUNT IN O.R.C. SEC. 4115.03 (b) (1) or (2), AS APPLICABLE.

Section 4115.05 provides, in part: "Where contracts are not awarded or construction undertaken within ninety days from the date of the establishment of the prevailing wages, there shall be a redetermination of the prevailing rate of wages before the contract is awarded." The expiration date of this wage schedule is listed above for your convenience only. This wage determination is not intended as a blanket determination to be used for all projects during this period without prior approval of this Department.

Section 4115.04, Ohio Revised Code provides, in part: "Such schedule of wages shall be attached to and made a part of the specifications for the work, and shall be printed on the bidding blanks where the work is done by contract..."

The contract between the letting authority and the successful bidder shall contain a statement requiring that mechanics and laborers be paid a prevailing rate of wage as required in Section 4115.06, Ohio Revised Code.

The contractor or subcontractor is required to file with the contracting public authority upon completion of the project and prior to final payment therefore an affidavit stating that he has fully complied with Chapter 4115 of the Ohio Revised Code.

The wage rates contained in this schedule are the "Prevailing Wages" as defined by Section 4115.03, Ohio Revised Code (the basic hourly rates plus certain fringe benefits). These rates and fringes shall be a minimum to be paid under a contract regulated by Chapter 4115 of the Ohio Revised Code by contractors and subcontractors. The prevailing wage rates contained in this schedule include the effective dates and wage rates currently on file. In cases where future effective dates are not included in this schedule, modifications to the wage schedule will be furnished to the Prevailing Wage Coordinator appointed by the public authority as soon as prevailing wage rates increases are received by this office.

"There shall be posted in a prominent and accessible place on the site of work a legible statement of the Schedule of Wage Rates specified in the contract to the various classifications of laborers, workmen, and mechanics employed, said statement to remain posted during the life of such contract." Section 4115.07, Ohio Revised Code.

Apprentices will be permitted to work only under a bona fide apprenticeship program if such program exists and if such program is registered with the Ohio Apprenticeship Council.

Section 4115.071 provides that no later than ten days before the first payment of wages is due to any employee of any contractor or subcontractor working on a contract regulated by Chapter 4115, Ohio Revised Code, the contracting public authority shall appoint one of his own employees to act as the prevailing wage coordinator for said contract. The duties of the prevailing wage coordinator are outlined in Section 4115.071 of the Ohio Revised Code.

Section 4115.05 provides for an escalator in the prevailing wage rate. Each time a new rate is established, that rate is required to be paid on all ongoing public improvement projects.

A further requirement of Section 4115.05 of the Ohio Revised Code is: "On the occasion of the first pay date under a contract, the contractor shall furnish each employee not covered by a collective bargaining agreement or understanding between employers and bona fide organizations of Labor with individual written notification of the job classification to which the employee is assigned, the prevailing wage determined to be applicable to

that classification, separated into the hourly rate of pay and the fringe payments, and the identity of the prevailing wage Coordinator appointed by the public authority. The contractor or subcontractor shall furnish the same notification to each affected employee every time the job classification of the employee is changed."

Work performed in connection with the installation of modular furniture may be subject to prevailing wage.

THIS PACKET IS NOT TO BE SEPARATED BUT IS TO REMAIN COMPLETE AS IT IS SUBMITTED TO YOU. (Reference guidelines and forms are included in this packet to be helpful in the compliance of the Prevailing Wage law.)
wh1500

PREVAILING WAGE THRESHOLD LEVELS
IMPORTANT NOTICE

Before advertising for bids, contracting, or undertaking construction with its own forces, to construct a public improvement, the Public Authority shall have the Ohio Department of Commerce-Division of Industrial Compliance, Bureau of Wage and Hour Administration determine the prevailing rates of wages for workers employed on the public improvement. The wage determination must be included in the project specifications and printed on the bidding blanks where work is done by contract.

"New" construction threshold for *Building* Construction:	**$250,000**
"Reconstruction, enlargement, alteration, repair, remodeling, renovation, or painting" threshold level for *Building* Construction:	**$75,000**

As of January 1, 2016:

"New" construction that involves *roads, streets, alleys, sewers, ditches and other works connected to road or bridge construction* threshold level has been adjusted to:	**$88,495**
"Reconstruction, enlargement, alteration, repair, remodeling, renovation, or painting" that involves *roads, streets, alleys, sewers, ditches and other works connected to road or bridge construction* threshold level has been adjusted to:	**$26,514**

A) Thresholds are to be adjusted biennially by the Director of the Ohio Department of Commerce.
B) Biennial adjustments to threshold levels are made according to the Building Cost for Skilled Labor Index published by McGraw-Hill's Engineering News-Record, but may not increase or decrease more than 3% for any year.

If there are questions concerning this notification, please contact:

Ohio Department of Commerce
Division of Industrial Compliance
Bureau of Wage and Hour Administration
6606 Tussing Road, PO Box 4009
Reynoldsburg, Ohio 43068-9009
Phone: 614-644-2239
Fax: 614-728-8639
www.com.ohio.gov

Department of Commerce
Division of Industrial Compliance

Bureau of Wage and Hour Administration
6606 Tussing Road - PO Box 4009
Reynoldsburg, OH 43068-9009
Phone 614-644-2239 | Fax 614-728-8639
TTY/TDD 800-750-0750
www.com.ohio.gov
An Equal Opportunity Employer and Service Provider

John R. Kasich, Governor
Andre T. Porter, Director

PREVAILING WAGE CONTRACTOR RESPONSIBILITIES

This is a summary of prevailing wage contractors' responsibilities. For more detailed information please refer to Chapter 4115 of the Ohio Revised Code

General Information

Ohio's prevailing wage laws apply to all public improvements financed in whole or in part by public funds when the total overall project cost is fairly estimated to be more than $250,000 for new construction or $75,000 for reconstruction, enlargement, alteration, repair, remodeling, renovation, or painting.

Ohio's prevailing wage laws apply to all public improvements financed in whole or in part by public funds when the total overall project cost is fairly estimated to be more than $84,314 for new construction that involves roads, streets, alleys, sewers, ditches and other works connected to road or bridge construction or $25,261 for reconstruction, enlargement, alteration, repair, remodeling, renovation, or painting of a public improvement that involves roads, streets, alleys, sewers, ditches and other works connected to road or bridge construction.

a) Thresholds are to be adjusted biennially by the Administrator of Ohio Department of Commerce, Division of Industrial Compliance and Labor, Bureau of Wage and Hour Administration

b) Biennial adjustments to threshold levels are made according to the Price Deflator for Construction Index, United States Department of Commerce, Bureau of the Census*, but may not increase or decrease more than 3% for any year

Penalties for violation

Violators are to be assessed the wages owed, plus a penalty of 100% of the wages owed.

Intentional Violations

If an intentional violation is determined to have occurred, the contractor is prohibited from contracting directly or indirectly with any public authority for the construction of a public improvement. Intentional violation means "a willful, knowing, or deliberate disregard for any provision" of the prevailing wage law and includes but is not limited to the following actions:

- Intentional failure to submit payroll reports as required, or knowingly submitting false or erroneous reports.
- Intentional misclassification of employees for the purpose of reducing wages.
- Intentional misclassification of employees as independent contractors or as apprentices.
- Intentional failure to pay the prevailing wage.
- Intentional failure to comply with the allowable ratio of apprentices to skilled workers as required by the regulations established by Ohio Department of Commerce, Division of Industrial Compliance and Labor, Bureau of Wage and Hour Administration.
- Intentionally employing an officer, of a contractor or subcontractor, that is known to be prohibited from contracting, directly or indirectly, with a public authority.

Responsibilities

A. Pay the prevailing rate of wages as shown in the wage rate schedules issued by the Ohio Department of Commerce, Division of Industrial Compliance and Labor, Bureau of Wage and Hour Administration, for the classification of work being performed.

1. Wage rate schedules include all modifications, corrections, escalations, or reductions to wage rates issued for the project.

2. Overtime must be paid at time and one-half the employee's base hourly rate. Fringe benefits are paid at straight time rate for all hours including overtime.
3. Prevailing wages must be paid in full without any deduction for food, lodging, transportation, use of tools, etc.; unless, the employee has voluntarily consented to these deductions in writing. The public authority and the Director of Ohio Department of Commerce, Division of Industrial Compliance and Labor, Bureau of Wage and Hour Administration - must approve these deductions as fair and reasonable. Consent and approval must be obtained before starting the project.

B. Use of Apprentices and Helpers cannot exceed the ratios permitted in the wage rate schedules.
1. Apprentices must be registered with the U.S. Department of Labor Bureau of Apprenticeship and Training.
2. Contractors must provide the Prevailing Wage Coordinator a copy of the Apprenticeship Agreement for each apprentice on the project.

C. Keep full and accurate payroll records available for inspection by any authorized representative of the Ohio Department of Commerce, Division of Industrial Compliance, and Labor, Bureau of Wage and Hour Administration or the contracting public authority, including the Prevailing Wage Coordinator. Records should include but are not limited to:
1. Time cards, time sheets, daily work records, etc.
2. Payroll ledger\journals and canceled checks\check register.
3. Fringe benefit records must include program, address, account number, & canceled checks.
4. Records made in connection with the public improvement must not be removed from the State for one year following the completion of the project.
5. Out-of-State Corporations must submit to the Ohio Secretary of State the full name and address of their Statutory Agent in Ohio.

D. Prevailing Wage Rate Schedule must be posted on the job site where it is accessible to all employees.

E. Prior to submitting the initial payroll report, supply the Prevailing Wage Coordinator with your project dates to schedule reporting of your payrolls.

F. Supply the Prevailing Wage Coordinator a list of all subcontractors including the name, address, and telephone number for each.
1. **Contractors are responsible for their subcontractors' compliance with requirements of Chapter 4115 of the Ohio Revised Code.**

G. Before employees start work on the project, supply them with written notification of their job classification, prevailing wage rate, fringe benefit amounts, and the name of the Prevailing Wage Coordinator for the project. A copy of the completed signed notification should be submitted to Prevailing Wage Coordinator.

H. Supply all subcontractors with the Prevailing Wage Rates and changes.

I. Submit certified payrolls within two (2) weeks after the initial pay period. Payrolls must include the following information:
1. Employees' names, addresses, and social security numbers.
   (a) Corporate officers/owners/partners and any salaried personnel who do physical work on the project are considered employees. All rate and reporting requirements are applicable to these individuals.
2. Employees' work classification.
   (a) Be specific about the laborers and/or operators (Group)
   (b) For all apprentices, show level/year and percent of journeyman's rate
3. Hours worked on the project for each employee.

(a) The number of hours worked in each day and the total number of hours worked each week.

4. Hourly rate for each employee.
   (a) The minimum rate paid must be the wage rate for the appropriate classification. The Department's Wage Rate Schedule sets this rate.
   (b) All overtime worked is to be paid at time and one-half for all hours worked more than forty (40) per week.
5. Where fringes are paid into a bona fide plan instead of cash, list each benefit and amount per hour paid to program for each employee.
   (a) When the amount contributed to the fringe benefit plan and the total number of hours worked by the employee on all projects for the year are documented, the hourly amount is calculated by dividing the total contribution of the employer by the total number of hours worked by the employee.
   (b) When the amount contributed to the fringe benefit is documented but not the total hours worked, the hourly amount is calculated by **dividing the total yearly contribution by 2080.**
6. Gross amount earned on all projects during the pay period.
7. Total deductions from employee's wages.
8. Net amount paid.

J. The reports shall be certified by the contractor, subcontractor, or duly appointed agent stating that the payroll is correct and complete; and that the wage rates shown are not less than those required by the O.R.C. 4115.

K. Provide a Final Affidavit to the Prevailing Wage Coordinator upon the completion of the project.

INSTRUCTIONS FOR PREPARING CERTIFIED PAYROLL REPORTS

General

Contractors and subcontractors are required by law to submit certified payroll reports for work on projects covered by Ohio's Prevailing Wage Law. This form meets the reporting requirements established by Ohio Revised Code Chapter 4115. The use of this form is not mandatory, employers may submit their own forms provided that all of the required information is included. This form may be reproduced, or additional copies obtained from:

Ohio Department of Commerce Division of Industrial Compliance and Labor Bureau of Wage & Hour Administration 6606 Tussing Rd. P. O. Box 4009 Reynoldsburg, OH 43068-9009 Phone: (614) 644-2239

Certified Payroll Heading

Employer name and address: Company's full name and address. Indicate if the company is a subcontractor, if so list the name of the General or Prime. Project: Name and location of the project, including county. Contracting Public Authority: Name and address of the contracting public authority. Week Ending: Month, day, and year for last day of reporting period. Payroll # : Indicates first, second, third, etc. payroll filed by the company for the project. Page Indicator: number of pages included in the report. Project Number: Determined by the public authority. If there is no number leave blank.

Information by Column

- 1. Employee Name, Address and Social Security number: This information must be provided for all employees that perform physical labor on the project. Corporate officers, partners, and salaried employees are considered employees and must be paid the prevailing rate. Individual sole proprietors do not have to pay themselves prevailing rate but must report their hours on the project.
- 2. Work Class: List classification of work actually performed by employee. If unsure of work classification, consult the Ohio department of Commerce, Wage and Hour Bureau. Employees working more than one classification should have separate line entries for each classification. Indicate what year/level for Apprentices. Be specific when using laborer and operator classifications; for example, Backhoe Operator or Asphalt Laborer.
- 3. Hours Worked, Day & Date: In the first row of column 3 enter days of pay period example; M T W TH F S S. The second row is for the date that corresponds with each day for the pay period. In the employee information section enter the number of hours worked on the prevailing wage project and which day the hours were worked. Separate rows are labeled for (ST) straight time hours and (OT) overtime hours. All hours worked after 40, must be paid at the appropriate overtime rate.
- 4. Project Total Hours : Total the hours entered for pay period.
- 5. Base Rate: Enter actual rate per hour paid to the employee. The overtime hourly rate is time and one-half the base rate listed in the prevailing wage schedule plus fringe benefits at straight time rate. The prevailing wage schedule lists the base rate plus fringe benefit amounts. These amounts added together equal the total prevailing wage rate. Employers must pay this total amount in one of three ways.
  - Total rate may be paid in entirety in the base rate to the employee; in which case, the cash designation will be checked for fringe benefits.
  - Total rate may be paid as listed in prevailing wage rate schedule with total fringe amounts paid approved plans.
  - Total rate may be paid with a combination of base rate and fringe payments to approved plans in amounts other than those listed in schedule.
- 6. Project Gross: Enter total gross wages earned on the project for straight time and overtime. Project hours X base rate should equal project gross.
- 7. Fringes: If fringe benefits are paid in the hourly base rate, indicate this by marking the cash space. If fringe benefits are paid to approved plans as listed in the prevailing wage rate schedule, mark the space Approved Plans. If fringe benefits are paid partially in the base rate and partially to approved plans, mark the space Cash & Approved plans. List the hourly amount paid to approved plans for each fringe. If payments are not made on a per hour basis, calculate the hourly fringe credit by dividing the yearly employer contribution by the lesser of: hours actually worked in the year (these must be documented) or 2080. Fringe benefits include: Employer's share of health insurance, life insurance, retirement plan, bonus/profit sharing, sick pay, holiday pay, personal leave, vacation, and education/training programs.
- 8. Total Hours All Jobs: Total all hours worked during the pay period including non-prevailing wage jobs.
- 9. Total Gross All Jobs: Gross amount earned in the pay period for all hours worked.
- 10. Self explanatory.
- 11. Self explanatory.
- 12. Self explanatory.

CONTACT US

Division of Industrial Compliance & Labor
6606 Tussing Road
Reynoldsburg, OH 43068

Phone 614.644.2223
Fax 614.644.2618
Email IC@com.state.oh.us

Webmaster
Contact the Webmaster for Questions or Comments on the Website:
webmaster@com.state.oh.us

CONNECT WITH US

LOOKUP SERVICES

Registered Contractor List
Boiler Information Database
Building Code Compliance Electronic Plan Submission
Board Of Building Appeals Case Lookup
Elevator Database Lookup

RESOURCES

Federal Wage and Hour
U.S. Consumer Product Safety Commission
National Electric, Fire Alarm and Sprinkler Codes
2015 Minimum Wage Poster
Minor Labor Law Poster
2012 Minimum Wage Information

ABOUT INDUSTRIAL COMPLIANCE

Director Jacqueline T. Williams
Superintendent Dave Williamson

Ohio.gov

Copyright©2012 Ohio Department of Commerce. All Rights Reserved.

CONTRACTOR NAME:_____

ADDRESS:_____

_____

PHONE/E-MAIL:_____

Notification of Classification

TO: _____
(Employee's Name)

RE: _____
(Project)

A requirement of Section 4115.05 Ohio Revised Code is "On the occasion of the first pay date under a contract, the contractor shall furnish each employee not covered by a collective bargaining agreement or understanding between employers and bona fide organizations of labor with individual written notification of the job classification to which the employee is assigned, the prevailing wage determined to be applicable to the classification, separated into the hourly rate of pay and the fringe payments and the identity of the prevailing wage coordinator appointed by the public authority. The contractor or sub-contractor shall furnish the same notification to each affected employee every time the job classification of the employee is changed."

Your job classification for the above project is: _____

The prevailing wage for that job classification is: $_____

Which consists of $ _____ per hour in wages.

And $ _____ in fringe benefit payments

The Prevailing Wage Coordinator: Veronica Fetsko
City of Mentor
8500 Civic Center Boulevard
Mentor, Ohio 44060
(440) 974-5776

The undersigned employee acknowledges receiving this Notice:

_____
Employee Signature Date

CERTIFIED PAYROLL REPORT

Employer Name and Address	Name of General/Prime Contractor	Project Name and Location	Contracting Public Authority
Check if Subcontractor_____	Week Ending	Payroll #_____ Page _____ of _____	Project Number

1. Employee Name, Address, SS#	2. Work Class		3. Hours Worked Day & Date							4. Project Total Hrs.	5. Base Rate	6. Project Gross	7. Fringes Cash _____ Approved Plans _____ Cash and Approved Plans_____					8. Total Hours All Jobs	9. Total Gross All Jobs	10. Taxes Withheld	11. Other Deducts	12. Net Paid
													H&W	Pens.	Vac.	App.	Other					
		OT																				
		ST																				
		OT																				
		ST																				
		OT																				
		ST																				
		OT																				
		ST																				
		OT																				
		ST																				
		OT																				
		ST																				
		OT																				
		ST																				
		OT																				
		ST																				

Date_____ My signature on this form signifies that I pay, or supervise the payment of the employees shown above. I am certifying: 1) That during the pay period reported on this form, all hours worked on this project have been paid at the appropriate prevailing wage rate for the class of work done. 2) That fringe benefits have been paid as indicated above. 3) That no rebates or deductions have been or will be made, directly or indirectly from the total wages earned, other other than permissible deductions as defined in the Ohio Revised Code Chapter 4115. 4) That apprentices are registered with the U.S. Department of Labor Bureau of Apprenticeship and Training. The willful falsification of any of the above statements may subject the contractor or subcontractor to civil or criminal prosecution.

Name and Title | Signature

CERTIFICATION

Date _____

I, _____ _____
(Name of signatory part) (Title)

do hereby certify:

(1) That I pay or supervise the payment of the persons employed by _____

_____ on the _____
(Contractor or subcontractor) (Building or work)

_____; that during the payroll period commencing on the

_____ day of _____, 20___ and ending the _____ day of

_____, 20___ all laborers and mechanics employed on said project have been

paid at the prevailing rate of wages for laborers and mechanics for the class of work called for by said project, and that no rebates have been or will be made either directly or indirectly to or on behalf of said

_____
(Contractor or subcontractor)

from the total wages earned by any person and that no deductions have been made either directly or indirectly from the total wages earned by any person, other than permissible deductions as defined in Chapter 4115. Ohio Revised Code, and described below:

_____

_____

_____

_____

(2) That this an all payrolls required to be submitted for the above period are correct and complete; that the prevailing wage rates for laborers and mechanics are not less than the prevailing wage rates then payable in the same trade or occupation in the locality where the work is being performed, as determined by the Ohio Department of Industrial Relations; and, that the classifications set forth for each laborer and mechanic conform with the work performed,

(3) That apprentices employed during the above period are duly registered in a bona fide apprenticeship program registered with the State Apprenticeship Council.

(4) That:

(a) WHERE FRINGE BENEFITS ARE PAID TO APPROVED PLANS, FUNDS OR PROGRAMS

☐ In addition to the base hourly wage rates paid to each laborer or mechanic listed in the above referenced payroll, payments of fringe benefits as determined by the Ohio Department of Industrial Relations have been made to

have been made to _____ in the amount of

$_____ for the benefit of such employees, except as noted in Section (4c) below.

(b) WHERE FRINGE BENEFITS ARE PAID IN CASH

☐ Each laborer or mechanic listed in the above referenced payroll has been paid, as indicated on the payroll, an amount not less than the sum of the applicable basic hourly wage rate plus the amount of the required fringe benefits as determined by the Ohio Department of Industrial Relations, except as noted in Section (4c) below.

(c) EXCEPTIONS

EXCEPTION (CRAFT)	EXPLANATION

Remarks:

Name and Title	Signature

Prevailing Wage Rate
Skilled Crafts

Name of Union: Asbestos Local 207 OH

Change # : LCN01-2016fbLoc207OH

Craft : Asbestos Worker Effective Date : 09/08/2016 Last Posted : 09/08/2016

	BHR	Fringe Benefit Payments						Irrevocable Fund		Total PWR	Overtime Rate
		H&W	Pension	App Tr.	Vac.	Annuity	Other	LECET (*)	MISC (*)		
Classification											
Asbestos Abatement	$24.65	$6.80	$5.60	$0.65	$0.00	$0.00	$0.07	$0.00	$0.00	$37.77	$50.09
Trainee	$16.10	$6.80	$1.30	$0.65	$0.00	$0.00	$0.07	$0.00	$0.00	$24.92	$32.97

Special Calculation Note :

Ratio :

3 Journeymen to 1 Trainee

Jurisdiction (* denotes special jurisdictional note) :

ADAMS, ASHLAND, ASHTABULA*, ATHENS, AUGLAIZE, BROWN, BUTLER*, CARROLL, CHAMPAIGN, CLARK, CLERMONT, CLINTON, COLUMBIANA, COSHOCTON, CRAWFORD, CUYAHOGA, DARKE, DELAWARE, FAIRFIELD, FAYETTE, FRANKLIN, GEAUGA, GREENE, GUERNSEY, HAMILTON, HARDIN, HARRISON, HIGHLAND, HOCKING, HOLMES, HURON, KNOX, LAKE, LICKING, LOGAN, LORAIN, MADISON, MAHONING, MARION, MEDINA, MIAMI, MONTGOMERY, MORGAN, MORROW, MUSKINGUM, NOBLE, PERRY, PICKAWAY, PORTAGE, PREBLE, RICHLAND, ROSS, SHELBY, STARK, SUMMIT, TRUMBULL, TUSCARAWAS, UNION, VINTON, WARREN*, WAYNE

Special Jurisdictional Note : Butler County:(townships of Fairfield,Hanover,Liberty,Milford,Morgan,Oxford,Ripley,Ross,StClair,Union & Wayne.) (Lemon & Madison) Warren County: (townships of: Deerfield, Hamilton, Harlan, Salem, Union & Washington). (Clear Creek, Franklin, Mossie, Turtle Creek & Wayney). Ashtabula County: (post offices & townships of Ashtabula, Austinburg, Geneva, Harperfield, Jefferson, Plymouth & Saybrook) (townships of Andover, Cherry Valley, Colbrook, Canneaut, Denmark, Dorset, East Orwell, Hartsgrove, Kingville, Lenox, Monroe,Morgan,New Lyme,North Kingsville, Orwell, Pierpoint, Richmond Rock Creek, Rome, Shefield, Trumbull, Wayne, Williamsfield & Windsor) Erie County:(post offices & townships of Berlin, Berlin Heights,Birmingham,Florence ,Huron, Milan, Shinrock & Vermilion)

Details :

Asbestos & lead paint abatement including,but not limited to the removal or encapsulation of asbestos & lead paint,all work in conjunction with the preparation of the removal of same & all work in conjunction with the clean up after said removal.The removal of all insulation materials, whether they contain asbestos or not, from mechanical systems (pipes, boilers, ducts, flues, breaching, etc.) is recognized as being the exclusive work of the Asbestos Abatement Workers.

On all mechanical systems (pipes, boilers, ducts, flues, breaching, etc.) that are going to be demolished, the removal of all insulating materials whether they contain asbestos or not shall be the exclusive work of the Laborers.
An Abatement Journeyman is anyone who has more than 300 hours in the Asbestos Abatement field.

Prevailing Wage Rate
Skilled Crafts

Name of Union: Asbestos Local 3 Heat & Frost Insulators

Change # : LCN01-2016fbLoc3

Craft : Asbestos Worker Effective Date : 08/01/2016 Last Posted : 07/27/2016

	BHR		Fringe Benefit Payments						Irrevocable Fund		Total PWR	Overtime Rate
			H&W	Pension	App Tr.	Vac.	Annuity	Other	LECET (*)	MISC (*)		
Classification												
Asbestos Insulation Worker	$37.48		$10.65	$9.50	$0.00	$0.00	$0.00	$0.00	$0.00	$0.00	$57.63	$76.37
Fire Stop Specialist	$37.48		$10.65	$9.50	$0.00	$0.00	$0.00	$0.00	$0.00	$0.00	$57.63	$76.37
Fire Stop Technician	$31.45		$10.65	$4.00	$0.00	$0.00	$0.00	$0.00	$0.00	$0.00	$46.10	$61.82
Apprentice	Percent											
1st year	45.80	$17.17	$10.65	$1.00	$0.00	$0.00	$0.00	$0.00	$0.00	$0.00	$28.82	$37.40
2nd year	58.50	$21.93	$10.65	$2.00	$0.00	$0.00	$0.00	$0.00	$0.00	$0.00	$34.58	$45.54
3rd year	71.20	$26.69	$10.65	$3.00	$0.00	$0.00	$0.00	$0.00	$0.00	$0.00	$40.34	$53.68
4th year	83.90	$31.45	$10.65	$4.00	$0.00	$0.00	$0.00	$0.00	$0.00	$0.00	$46.10	$61.82

Special Calculation Note : There are no special calculations for this classification.

Ratio :

3 Journeymen to 1 Apprentice per shop

Jurisdiction (* denotes special jurisdictional note) :

ASHTABULA*, CUYAHOGA, ERIE*, GEAUGA, HURON, LAKE, LORAIN

Special Jurisdictional Note : Ashtabula (the townships of Ashtabula, Austinburg, Geneva, Jefferson, Plymouth & Saybrook), Lake, Geauga, Cuyahoga, Lorain, Huron, Erie (to Sandusky limits). The counties of Ashland, Coshocton, Holmes, Medina, Portage, Richland, Stark, Tuscarawas, Wayne, Summit, Harrison, Carroll, Columbiana, Mahoning & Trumbull & the remainder of Ashtabula will be considered open counties on a 90 day basis automatically renewable unless revoked by the Union upon 15-day written notice to the employers.

Details :

Mechanics & apprentices engaged in the manufacture,fabrication,assembling,molding,handling,erection,spraying,pouring,mixing,hanging,clean-up, preparation,application,adjusting,alteration,repairing,dismantling,reconditioning,testing&maintenance of Heat & Frost Insulation such as Magnesia,Asbestos,Hair Felt,Wool Felt,Cork,Mineral Wool, Infusorial Earth,Mercerized Silk,Flax,Fiber,Fire Felt,Asbestos Paper,Asbestos Curtain,Asbestos Millboard,Fiberglass, Foam glass, Styrofoam, Polyurethane, fire stopping,smoke stopping,all recyclable material,soundproofing,all penetrations,any flexible or rigid fireproofing,all jacketing systems including metal,lead,and PVC or other material.

Prevailing Wage Rate
Skilled Crafts

Name of Union: Boilermaker Local 744

Change # : CN01-2008Loc744

Craft : Boilermaker Effective Date : 07/01/2009 Last Posted : 06/30/2010

	BHR		Fringe Benefit Payments						Irrevocable Fund		Total PWR	Overtime Rate
			H&W	Pension	App Tr.	Vac.	Annuity	Other	LECET (*)	MISC (*)		
Classification												
Boilermaker	$36.84		$6.82	$6.46	$0.35	$0.00	$3.75	$0.00			$54.22	$72.64
Apprentice	Percent											
1st 6 months	70.00	$25.79	$6.62	$6.46	$0.30	$0.00	$3.75	$0.00			$42.92	$55.81
2nd 6 months	72.52	$26.72	$6.62	$6.46	$0.30	$0.00	$3.75	$0.00			$43.85	$57.20
3rd 6 months	75.00	$27.63	$6.62	$6.46	$0.30	$0.00	$3.75	$0.00			$44.76	$58.58
4th 6 months	77.51	$28.55	$6.62	$6.46	$0.30	$0.00	$3.75	$0.00			$45.68	$59.96
5th 6 months	80.02	$29.48	$6.62	$6.46	$0.30	$0.00	$3.75	$0.00			$46.61	$61.35
6th 6 months	85.00	$31.31	$6.62	$6.46	$0.30	$0.00	$3.75	$0.00			$48.44	$64.10
7th 6 months	90.00	$33.16	$6.62	$6.46	$0.30	$0.00	$3.75	$0.00			$50.29	$66.86
8th 6 months	95.02	$35.01	$6.62	$6.46	$0.30	$0.00	$3.75	$0.00			$52.14	$69.64
Helper	60.00	$22.10	$6.82	$6.46	$0.35	$0.00	$3.75	$0.00			$39.48	$50.54

Special Calculation Note : No special calculations for this skilled craft wage rate are required at this time.

Ratio :

5 Journeymen to 1 Apprentice to 1 Helper

Jurisdiction (* denotes special jurisdictional note) :

ASHTABULA, CARROLL, COSHOCTON,

CUYAHOGA, GEAUGA, HARRISON, HOLMES, LAKE, LORAIN, MAHONING, MEDINA, PORTAGE, STARK, SUMMIT, TRUMBULL, TUSCARAWAS, WAYNE

Special Jurisdictional Note :

Details :

Prevailing Wage Rate
Skilled Crafts

Name of Union: Bricklayer Local 16

Change # : LCN01-2016fbLoc16

Craft : Bricklayer Effective Date : 05/20/2016 Last Posted : 05/20/2016

	BHR		Fringe Benefit Payments						Irrevocable Fund		Total PWR	Overtime Rate
			H&W	Pension	App Tr.	Vac.	Annuity	Other	LECET (*)	MISC (*)		
Classification												
Bricklayer	$32.52		$7.75	$6.85	$0.68	$0.00	$0.00	$0.00	$0.00	$0.00	$47.80	$64.06
Cement Masons	$32.52		$7.75	$6.85	$0.68	$0.00	$0.00	$0.00	$0.00	$0.00	$47.80	$64.06
Pointer Caulker Cleaner	$32.52		$7.75	$6.85	$0.68	$0.00	$0.00	$0.00	$0.00	$0.00	$47.80	$64.06
Plasterers	$32.52		$7.75	$6.85	$0.68	$0.00	$0.00	$0.00	$0.00	$0.00	$47.80	$64.06
Mason Trainess												
1-90 Days	$14.63		$0.00	$0.00	$0.00	$0.00	$0.00	$0.00	$0.00	$0.00	$14.63	$21.94
91-365 Days	$14.63		$7.75	$0.00	$0.00	$0.00	$0.00	$0.00	$0.00	$0.00	$22.38	$29.69
366 plus days	$16.26		$7.75	$0.00	$0.00	$0.00	$0.00	$0.00	$0.00	$0.00	$24.01	$32.14
Apprentice	**Percent**											
1st 6 months	45.00	$14.63	$7.75	$1.85	$0.68	$0.00	$0.00	$0.00	$0.00	$0.00	$24.91	$32.23
2nd 6 months	51.00	$16.59	$7.75	$1.85	$0.68	$0.00	$0.00	$0.00	$0.00	$0.00	$26.87	$35.16
3rd 6 months	58.00	$18.86	$7.75	$1.85	$0.68	$0.00	$0.00	$0.00	$0.00	$0.00	$29.14	$38.57
4th 6 months	66.00	$21.46	$7.75	$1.85	$0.68	$0.00	$0.00	$0.00	$0.00	$0.00	$31.74	$42.47
5th 6 months	75.00	$24.39	$7.75	$1.85	$0.68	$0.00	$0.00	$0.00	$0.00	$0.00	$34.67	$46.87
6th 6 months	85.00	$27.64	$7.75	$1.85	$0.68	$0.00	$0.00	$0.00	$0.00	$0.00	$37.92	$51.74
7th 6 months	90.00	$29.27	$7.75	$1.85	$0.68	$0.00	$0.00	$0.00	$0.00	$0.00	$39.55	$54.18
8th 6 months	95.00	$30.89	$7.75	$1.85	$0.68	$0.00	$0.00	$0.00	$0.00	$0.00	$41.17	$56.62

Special Calculation Note : Improver Classification is 50% to 80% of the journeyman rate with full fringes except pension is at ($1.00)Until such time as the joint apprentice board determines he is a qualified Journeyman, this should not exceed the Apprentice training period.Improvers may not constitute more than 20% of the work force

Ratio :

1-2 Journeymen to 1 Apprentice 1Trainee
3-4 Journeymen to 1 Apprentice 1Trainee
5-6 Journeymen to 2 Apprentice 2 Trainee
7-10 Journeymen to 3 Apprentice 2Trainee

Jurisdiction (* denotes special jurisdictional note) :
ASHTABULA, GEAUGA, LAKE

Special Jurisdictional Note :

Details :

Prevailing Wage Rate
Skilled Crafts

Name of Union: Bricklayer Local 36 Zone 1 Tile Finisher

Change # : LCN01-2016fbLoc5

Craft : Bricklayer Effective Date : 05/01/2016 Last Posted : 04/13/2016

	BHR		Fringe Benefit Payments						Irrevocable Fund		Total PWR	Overtime Rate
			H&W	Pension	App Tr.	Vac.	Annuity	Other	LECET (*)	MISC (*)		
Classification												
Bricklayer Tile Finisher	$26.71		$6.90	$4.16	$0.58	$0.00	$0.00	$0.00	$0.00	$0.00	$38.35	$51.71
Apprentice Tile Finishers	Percent											
1st 6 months	60.00	$16.03	$6.90	$0.00	$0.00	$0.00	$0.00	$0.00	$0.00	$0.00	$22.93	$30.94
2nd 6 months	70.00	$18.70	$6.90	$4.16	$0.58	$0.00	$0.00	$0.00	$0.00	$0.00	$30.34	$39.69
3rd 6 months	75.00	$20.03	$6.90	$4.16	$0.58	$0.00	$0.00	$0.00	$0.00	$0.00	$31.67	$41.69
4th 6 months	80.00	$21.37	$6.90	$4.16	$0.58	$0.00	$0.00	$0.00	$0.00	$0.00	$33.01	$43.69
5th 6 months	85.00	$22.70	$6.90	$4.16	$0.58	$0.00	$0.00	$0.00	$0.00	$0.00	$34.34	$45.70
6th 6 months	90.00	$24.04	$6.90	$4.16	$0.58	$0.00	$0.00	$0.00	$0.00	$0.00	$35.68	$47.70

Special Calculation Note :

Ratio :

4 Journeymen to 1 Apprentice
10 Journeymen to 2 Apprentice
16 Journeymen to 3 Apprentice

Jurisdiction (* denotes special jurisdictional note) :
ASHTABULA, CUYAHOGA, GEAUGA, LAKE, LORAIN, MEDINA

Special Jurisdictional Note :

Details :
Tile Finishers:do all the cleaning, acid washing,grouting,by any methods or means. Also unpacking of all tiles,opening of all mastic containers,mixing of all mortar,thin-set and epoxy materials,also the distribution of it. They shall handle and distribute all materials such as sand,cement,lime,tile,all types of tile panels,prefabricated tile units, plastic materials and protective covering of all tile.Clean up and removal of always used in connection of said work.

Prevailing Wage Rate
Skilled Crafts

Name of Union: Bricklayer Local 36 Zone 1 Tile Layer

Change # : LCN01-2016fbLoc36

Craft : Bricklayer Effective Date : 05/01/2016 Last Posted : 04/13/2016

	BHR		Fringe Benefit Payments						Irrevocable Fund		Total PWR	Overtime Rate
			H&W	Pension	App Tr.	Vac.	Annuity	Other	LECET (*)	MISC (*)		
Classification												
Bricklayer Tile Layer	$30.84		$6.95	$1.81	$0.66	$0.00	$5.20	$0.00	$0.00	$0.00	$45.46	$60.88
Apprentice	Percent											
1st 30 days	35.00	$10.79	$0.00	$0.00	$0.00	$0.00	$0.00	$0.00	$0.00	$0.00	$10.79	$16.19
NEXT 6 months	40.00	$12.34	$6.95	$0.00	$0.00	$0.00	$0.00	$0.00	$0.00	$0.00	$19.29	$25.45
2nd 6 months is 1st year	45.00	$13.88	$6.95	$1.81	$0.66	$0.00	$5.20	$0.00	$0.00	$0.00	$28.50	$35.44
3rd 6 months	50.00	$15.42	$6.95	$1.81	$0.66	$0.00	$5.20	$0.00	$0.00	$0.00	$30.04	$37.75
4th 6 months	58.00	$17.89	$6.95	$1.81	$0.66	$0.00	$5.20	$0.00	$0.00	$0.00	$32.51	$41.45
5th 6 months	65.00	$20.05	$6.95	$1.81	$0.66	$0.00	$5.20	$0.00	$0.00	$0.00	$34.67	$44.69
6th 6 months is 3rd year	75.00	$23.13	$6.95	$1.81	$0.66	$0.00	$5.20	$0.00	$0.00	$0.00	$37.75	$49.32
7th 6 months is 3rd year	82.00	$25.29	$6.95	$1.81	$0.66	$0.00	$5.20	$0.00	$0.00	$0.00	$39.91	$52.55
8th 6 months is 3rd year	90.00	$27.76	$6.95	$1.81	$0.66	$0.00	$5.20	$0.00	$0.00	$0.00	$42.38	$56.25

Special Calculation Note : Classification title contains "Bricklayer" because contract originates within the Bricklayer Local.
Note that the classification description is clarified after the local union number at the top of

the page.

Ratio :

1-4 Journeymen to 1 Apprentice
5-11 Journeymen to 2 Apprentice
12-16 Journeymen to 3 Apprentice

Jurisdiction (* denotes special jurisdictional note) :

ASHTABULA, CUYAHOGA, GEAUGA, LAKE, LORAIN, MEDINA

Special Jurisdictional Note :

Details :

Prevailing Wage Rate
Skilled Crafts

Name of Union: Bricklayer Local 5 Marble Mason

Change # : LCN01-2015fbLoc5

Craft : Bricklayer Effective Date : 10/07/2015 Last Posted : 10/07/2015

	BHR		Fringe Benefit Payments						Irrevocable Fund		Total PWR	Overtime Rate
			H&W	Pension	App Tr.	Vac.	Annuity	Other	LECET (*)	MISC (*)		
Classification												
Bricklayer Horizontal Marble Mason	$23.36		$6.55	$6.63	$0.60	$0.00	$0.00	$0.00	$0.00	$0.00	$37.14	$48.82
Masonary Maintenance Specialist	$10.51		$0.00	$0.00	$0.00	$0.00	$0.00	$0.00	$0.00	$0.00	$10.51	$15.77
Apprentice	**Percent**											
1st 6 Months	50.00	$11.68	$6.55	$0.00	$0.00	$0.00	$0.00	$0.00	$0.00	$0.00	$18.23	$24.07
2nd 6 Months	60.00	$14.02	$6.55	$6.63	$0.60	$0.00	$0.00	$0.00	$0.00	$0.00	$27.80	$34.80
3rd 6 Months	65.00	$15.18	$6.55	$6.63	$0.60	$0.00	$0.00	$0.00	$0.00	$0.00	$28.96	$36.56
4th 6 Months	70.00	$16.35	$6.55	$6.63	$0.60	$0.00	$0.00	$0.00	$0.00	$0.00	$30.13	$38.31
5th 6 Months	75.00	$17.52	$6.55	$6.63	$0.60	$0.00	$0.00	$0.00	$0.00	$0.00	$31.30	$40.06
6th 6 Months	85.00	$19.86	$6.55	$6.63	$0.60	$0.00	$0.00	$0.00	$0.00	$0.00	$33.64	$43.56
MASON TRAINEES												
1st 90 Days	45.00	$10.51	$0.00	$0.00	$0.00	$0.00	$0.00	$0.00	$0.00	$0.00	$10.51	$15.77
1st year after 90 Days	45.00	$10.51	$6.55	$0.00	$0.00	$0.00	$0.00	$0.00	$0.00	$0.00	$17.06	$22.32
2nd Year	50.00	$11.68	$6.55	$0.00	$0.00	$0.00	$0.00	$0.00	$0.00	$0.00	$18.23	$24.07

Special Calculation Note : No special calculations for this skilled craft wage rate are required at this time.

Classification title contains "Bricklayer" because contract originates within the Bricklayer Local.

Ratio :

1 Journeyman to 1 Apprentice 1 Trainee
6 Journeyman to 2 Apprentices 1 Trainee
11 Journeyman to 3 Apprentices 2 Trainees

Journeyman Apprentice Mason Trainee
1-2 allows 1 Permits 1
3-4 allows 2 Permits 1
5-6 allows 2 Permits 2
7-10 allows 3 Permits 2

Jurisdiction (* denotes special jurisdictional note) :
ASHTABULA, CUYAHOGA, GEAUGA, LAKE, LORAIN, MEDINA, PORTAGE, SUMMIT

Special Jurisdictional Note :

Details :
In the mutual interest of both Employer and Union and to promote the masonry industry, it is agreed that the Employer may work with the Union and the Local Educational Partners in the jurisdiction of this agreement to employ School to work students provided that no conflicts exist with any Federal or State Laws. Employer must be party to a bonified Apprenticeship and Training program registered with the State of Ohio (OSAC). It is further agreed by both parties that the wages for the Masonry Maintenance Specialist shall be forty-five percent (45%) of the journeyman rate with no fringe benefits or as specified by the Local Educational Partner in the jurisdiction of the agreement.

Prevailing Wage Rate
Skilled Crafts

Name of Union: Bricklayer Local 5 Marble,Terrazzo & Mosaic

Change # : LCN01-2015fbLoc5

Craft : Bricklayer Effective Date : 10/07/2015 Last Posted : 10/07/2015

	BHR		Fringe Benefit Payments						Irrevocable Fund		Total PWR	Overtime Rate
			H&W	Pension	App Tr.	Vac.	Annuity	Other	LECET (*)	MISC (*)		
Classification												
Bricklayer Marble, Terrazzo, Mosaic and Stack	$33.95		$6.55	$6.63	$0.67	$0.00	$0.00	$0.00	$0.00	$0.00	$47.80	$64.78
Swing Scaffold Workers	$34.70		$6.55	$6.63	$0.67	$0.00	$0.00	$0.00	$0.00	$0.00	$48.55	$65.90
Masonary Maintenance	$15.28		$0.00	$0.00	$0.00	$0.00	$0.00	$0.00	$0.00	$0.00	$15.28	$22.92
Apprentice	**Percent**											
1st 6 months	50.00	$16.98	$6.55	$0.00	$0.00	$0.00	$0.00	$0.00	$0.00	$0.00	$23.53	$32.01
2nd 6 months	55.00	$18.67	$6.55	$6.63	$0.67	$0.00	$0.00	$0.00	$0.00	$0.00	$32.52	$41.86
3rd 6 months	60.00	$20.37	$6.55	$6.63	$0.67	$0.00	$0.00	$0.00	$0.00	$0.00	$34.22	$44.41
4th 6 months	65.00	$22.07	$6.55	$6.63	$0.67	$0.00	$0.00	$0.00	$0.00	$0.00	$35.92	$46.95
5th 6 months	70.00	$23.76	$6.55	$6.63	$0.67	$0.00	$0.00	$0.00	$0.00	$0.00	$37.62	$49.50
6th 6 months	75.00	$25.46	$6.55	$6.63	$0.67	$0.00	$0.00	$0.00	$0.00	$0.00	$39.31	$52.04
7th 6 months	80.00	$27.16	$6.55	$6.63	$0.67	$0.00	$0.00	$0.00	$0.00	$0.00	$41.01	$54.59
8th 6 months	85.00	$28.86	$6.55	$6.63	$0.67	$0.00	$0.00	$0.00	$0.00	$0.00	$42.71	$57.14
MASON TRAINEES 1st 90 Days	45.00	$15.28	$0.00	$0.00	$0.00	$0.00	$0.00	$0.00	$0.00	$0.00	$15.28	$22.92
	45.00	$15.28	$6.55	$0.00	$0.00	$0.00	$0.00	$0.00	$0.00	$0.00	$21.83	$29.47

1st Year after 90 Days												
2nd Year	50.00	$16.98	$6.55	$0.00	$0.00	$0.00	$0.00	$0.00	$0.00	$0.00	$23.53	$32.01

Special Calculation Note : Classification title contains "Bricklayer" because contract originates within the Bricklayer Local.

Ratio :

1 Journeyman to 1 Apprentice 1 Trainee
6 Journeyman to 2 Apprentices 1 Trainee
11 Journeyman to 3 Apprentices 2 Trainees

Jurisdiction (* denotes special jurisdictional note) :
ASHTABULA, GEAUGA, LAKE, PORTAGE, SUMMIT

Journeyman Apprentice Mason Trainee
1-2 allows 1 Permits 1
3-4 allows 2 Permits 1
5-6 allows 2 Permits 2
7-10 allows 3 Permits 2

Special Jurisdictional Note :

Details :
In the mutual interest of both Employer and Union and to promote the masonry industry, it is agreed that the Employer may work with the Union and the Local Educational Partners in the jurisdiction of this agreement to employ School to work students provided that no conflicts exist with any Federal or State Laws. Employer must be party to a bonified Apprenticeship and Training program registered with the State of Ohio (OSAC). It is further agreed by both parties that the wages for the Masonry Maintenance Specialist shall be forty-five percent (45%) of the journeyman rate with no fringe benefits or as specified by the Local Educational Partner in the jurisdiction of the agreement.

Prevailing Wage Rate
Skilled Crafts

Name of Union: Bricklayer Local 5 Terrazzo Finisher

Change # : LCN01-2016fbLoc5

Craft : Bricklayer Effective Date : 05/20/2016 Last Posted : 05/20/2016

	BHR		Fringe Benefit Payments						Irrevocable Fund		Total PWR	Overtime Rate
			H&W	Pension	App Tr.	Vac.	Annuity	Other	LECET (*)	MISC (*)		
Classification												
Bricklayer Terrazzo Finisher	$26.66		$6.80	$4.41	$0.59	$0.00	$0.00	$0.00	$0.00	$0.00	$38.46	$51.79
Apprentice Terrazzo Finishers	Percent											
1st 6 months	60.00	$16.00	$6.80	$0.00	$0.00	$0.00	$0.00	$0.00	$0.00	$0.00	$22.80	$30.79
2nd 6 months	70.00	$18.66	$6.80	$4.41	$0.59	$0.00	$0.00	$0.00	$0.00	$0.00	$30.46	$39.79
3rd 6 months	75.00	$20.00	$6.80	$4.41	$0.59	$0.00	$0.00	$0.00	$0.00	$0.00	$31.80	$41.79
4th 6 months	80.00	$21.33	$6.80	$4.41	$0.59	$0.00	$0.00	$0.00	$0.00	$0.00	$33.13	$43.79
5th 6 months	85.00	$22.66	$6.80	$4.41	$0.59	$0.00	$0.00	$0.00	$0.00	$0.00	$34.46	$45.79
6th 6 months	90.00	$23.99	$6.80	$4.41	$0.59	$0.00	$0.00	$0.00	$0.00	$0.00	$35.79	$47.79

Special Calculation Note : Classification title contains "Bricklayer" because contract originates within the Bricklayer Local.
Note that the classification description is clarified after the local union number at the top of the page.

Ratio :

1-2 Journeymen to 1 Apprentice
3- 4 Journeymen to 2 Apprentices

Jurisdiction (* denotes special jurisdictional note) :
ASHTABULA, CUYAHOGA, GEAUGA, LAKE, LORAIN, MEDINA, PORTAGE, SUMMIT

5- 6 Journeymen to 3 Apprentices
7- 8 Journeymen to 4 Apprentices

Special Jurisdictional Note :

Details :
Tile Finishers:do all the cleaning, acid washing,grouting,by any methods or means. Also unpacking of all tiles,opening of all mastic containers,mixing of all mortar,thin-set and epoxy materials,also the distribution of it. They shall handle and distribute all materials such as sand,cement,lime,tile,all types of tile panels,prefabricated tile units, plastic materials and protective covering of all tile.Clean up and removal of always used in connection of said work.

Terrazzo Finishers:Assisting in grinding, and handling of material whether by hand or wheel barrow, or power buggies, including sand Portland cement, resinous cement and admixtures, aggregates of marble, stone or other compositions, bonding adhesives, sealers, waxes, and coatings used for Terrazzo Mosaic work, preparing, mixing by hand or machine, and distributing (spreading) all kinds of underbed or underlayment necessary and all scratch coat used for terrazzo and mosaic work. Also the rubbing, grinding, cleaning, sealing and polishing same either by hand or machine. will assist in the installation of the sand bed, tar paper, wire lath, divider strips, and rolling procedures and acid etching of all concrete floors that require it before installation. Shall handle all materials and assist in the installation of all types of terrazzo floors whether conventional or thin-set variety.

Marble Finishers:Loading and unloading handling and distributing of marble materials including the mixing of all materials used for the installation of marble, such as cement underbeds for the floors, thin-set or epoxies including but not limited to plastic materials. Clean up and removal of all waster material of said work. Cleaning and grouting of all marble and slate, and all polishing of marble and slate floors.

Prevailing Wage Rate
Skilled Crafts

Name of Union: Bricklayer Local 5 Tile & Marble Finisher

Change # : LCN01-2016fbLoc5

Craft : Bricklayer Effective Date : 05/25/2016 Last Posted : 05/25/2016

	BHR		Fringe Benefit Payments						Irrevocable Fund		Total PWR	Overtime Rate
			H&W	Pension	App Tr.	Vac.	Annuity	Other	LECET (*)	MISC (*)		
Classification												
Bricklayer Tile Marble Finisher	$26.93		$6.80	$4.06	$0.59	$0.00	$0.00	$0.00	$0.00	$0.00	$38.38	$51.85
Apprentice Tile Marble Finishers	Percent											
1st 6 months	60.00	$16.16	$6.80	$0.00	$0.00	$0.00	$0.00	$0.00	$0.00	$0.00	$22.96	$31.04
2nd 6 months	70.00	$18.85	$6.80	$4.06	$0.59	$0.00	$0.00	$0.00	$0.00	$0.00	$30.30	$39.73
3rd 6 months	75.02	$20.20	$6.80	$4.06	$0.59	$0.00	$0.00	$0.00	$0.00	$0.00	$31.65	$41.75
4th 6 months	80.00	$21.54	$6.80	$4.06	$0.59	$0.00	$0.00	$0.00	$0.00	$0.00	$32.99	$43.77
5th 6 months	85.00	$22.89	$6.80	$4.06	$0.59	$0.00	$0.00	$0.00	$0.00	$0.00	$34.34	$45.79
6th 6 months	90.00	$24.24	$6.80	$4.06	$0.59	$0.00	$0.00	$0.00	$0.00	$0.00	$35.69	$47.81

Special Calculation Note : Classification title contains "Bricklayer" because contract originates within the Bricklayer Local.
Note that the classification description is clarified after the local union number at the top of the page.

Ratio :

Jurisdiction (* denotes special jurisdictional note) :

1-2 Journeymen to 1 Apprentice
3- 4 Journeymen to 2 Apprentice
5-6 Journeymen to 3 Apprentice
7-8 Journeymen to 4 Apprentice

ASHTABULA, CUYAHOGA, GEAUGA, LAKE, LORAIN, MEDINA, PORTAGE, SUMMIT

Special Jurisdictional Note :

Details :

Tile Finishers:do all the cleaning, acid washing,grouting,by any methods or means. Also unpacking of all tiles,opening of all mastic containers,mixing of all mortar,thin-set and epoxy materials,also the distribution of it. They shall handle and distribute all materials such as sand,cement,lime,tile,all types of tile panels,prefabricated tile units, plastic materials and protective covering of all tile.Clean up and removal of always used in connection of said work.

Terrazzo Finishers:Assisting in grinding, and handling of material whether by hand or wheel barrow, or power buggies, including sand Portland cement, resinous cement and admixtures, aggregates of marble, stone or other compositions, bonding adhesives, sealers, waxes, and coatings used for Terrazzo Mosaic work, preparing, mixing by hand or machine, and distributing (spreading) all kinds of underbed or underlayment necessary and all scratch coat used for terrazzo and mosaic work. Also the rubbing, grinding, cleaning, sealing and polishing same either by hand or machine. will assist in the installation of the sand bed, tar paper, wire lath, divider strips, and rolling procedures and acid etching of all concrete floors that require it before installation. Shall handle all materials and assist in the installation of all types of terrazzo floors whether conventional or thin-set variety.

Marble Finishers:Loading and unloading handling and distributing of marble materials including the mixing of all materials used for the installation of marble, such as cement underbeds for the floors, thin-set or epoxies including but not limited to plastic materials. Clean up and removal of all waster material of said work. Cleaning and grouting of all marble and slate, and all polishing of marble and slate floors.

Prevailing Wage Rate
Skilled Crafts

Name of Union: Carpenter Commercial NE District D

Change # : LCN01-2016fbLocNEClevelanddistD

Craft : Carpenter Effective Date : 06/16/2016 Last Posted : 06/16/2016

	BHR		Fringe Benefit Payments						Irrevocable Fund		Total PWR	Overtime Rate
			H&W	Pension	App Tr.	Vac.	Annuity	Other	LECET (*)	MISC (*)		
Classification												
Carpenter	$31.99		$6.32	$7.38	$0.45	$0.00	$2.18	$0.00	$0.00	$0.00	$48.32	$64.32
Apprentice	Percent											
1st 3 months	40.00	$12.80	$0.00	$0.00	$0.00	$0.00	$0.00	$0.00	$0.00	$0.00	$12.80	$19.19
2nd 3 months	45.00	$14.40	$6.32	$0.00	$0.45	$0.00	$0.00	$0.00	$0.00	$0.00	$21.17	$28.36
2nd 6 months is 1st year	50.00	$16.00	$6.32	$0.00	$0.45	$0.00	$0.00	$0.00	$0.00	$0.00	$22.76	$30.76
3rd 6 months	55.00	$17.59	$6.32	$0.00	$0.45	$0.00	$0.00	$0.00	$0.00	$0.00	$24.36	$33.16
4th 6 months is 2nd year	60.00	$19.19	$6.32	$0.00	$0.45	$0.00	$0.00	$0.00	$0.00	$0.00	$25.96	$35.56
5th 6 months	70.00	$22.39	$6.32	$5.17	$0.45	$0.00	$1.53	$0.00	$0.00	$0.00	$35.86	$47.06
6th 6 months is 3rd year	75.00	$23.99	$6.32	$5.54	$0.45	$0.00	$1.64	$0.00	$0.00	$0.00	$37.94	$49.94
7th 6 months	80.00	$25.59	$6.32	$5.90	$0.45	$0.00	$1.74	$0.00	$0.00	$0.00	$40.00	$52.80
8th 6 months is 4th year	85.00	$27.19	$6.32	$6.27	$0.45	$0.00	$1.85	$0.00	$0.00	$0.00	$42.08	$55.68

Special Calculation Note :

Ratio :

Jurisdiction (* denotes special jurisdictional note) :

3 Journeymen to 1 Apprentice	ASHTABULA, CUYAHOGA, GEAUGA, LAKE

Special Jurisdictional Note :

Details :

Prevailing Wage Rate
Skilled Crafts

Name of Union: Carpenter Floorlayer NE District D

Change # : LCN01-2016fbLocNEClevelanddistD

Craft : Carpenter Effective Date : 06/16/2016 Last Posted : 06/16/2016

	BHR		Fringe Benefit Payments						Irrevocable Fund		Total PWR	Overtime Rate
			H&W	Pension	App Tr.	Vac.	Annuity	Other	LECET (*)	MISC (*)		
Classification												
Carpenter Floorlayer	$31.99		$6.32	$7.38	$0.47	$0.00	$2.18	$0.00	$0.00	$0.00	$48.34	$64.34
Apprentice	Percent											
1st 3 months	40.00	$12.80	$0.00	$0.00	$0.00	$0.00	$0.00	$0.00	$0.00	$0.00	$12.80	$19.19
2nd 3 months	45.00	$14.40	$6.32	$0.00	$0.47	$0.00	$0.00	$0.00	$0.00	$0.00	$21.19	$28.38
2nd 6 months is 1st year	50.00	$16.00	$6.32	$0.00	$0.47	$0.00	$0.00	$0.00	$0.00	$0.00	$22.78	$30.78
3rd 6 months	55.00	$17.59	$6.32	$0.00	$0.47	$0.00	$0.00	$0.00	$0.00	$0.00	$24.38	$33.18
4th 6 months is 2nd year	60.00	$19.19	$6.32	$0.00	$0.47	$0.00	$0.00	$0.00	$0.00	$0.00	$25.98	$35.58
5th 6 months	70.00	$22.39	$6.32	$5.17	$0.47	$0.00	$1.53	$0.00	$0.00	$0.00	$35.88	$47.08
6th 6 months is 3rd year	75.00	$23.99	$6.32	$5.54	$0.47	$0.00	$1.64	$0.00	$0.00	$0.00	$37.96	$49.96
7th 6 months	80.00	$25.59	$6.32	$5.90	$0.47	$0.00	$1.74	$0.00	$0.00	$0.00	$40.02	$52.82
8th 6 months is 4th year	85.00	$27.19	$6.32	$6.27	$0.47	$0.00	$1.85	$0.00	$0.00	$0.00	$42.10	$55.70

Special Calculation Note :

Ratio :

	Jurisdiction (* denotes special jurisdictional note) :
3 Journeymen to 1 Apprentice	ASHTABULA, CUYAHOGA, GEAUGA, LAKE

Special Jurisdictional Note :

Details :

Prevailing Wage Rate
Skilled Crafts

Name of Union: Carpenter Insulation NE District D

Change # : LCN01-2016fbLocNEClevelanddistD

Craft : Carpenter Effective Date : 06/16/2016 Last Posted : 06/16/2016

	BHR		Fringe Benefit Payments						Irrevocable Fund		Total PWR	Overtime Rate
			H&W	Pension	App Tr.	Vac.	Annuity	Other	LECET (*)	MISC (*)		
Classification												
Carpenter Insulation	$25.59		$6.32	$7.38	$0.45	$0.00	$2.18	$0.00	$0.00	$0.00	$41.92	$54.72
Apprentice	Percent											
1st 3 months	50.00	$12.80	$0.00	$0.00	$0.00	$0.00	$0.00	$0.00	$0.00	$0.00	$12.80	$19.19
2nd 3 months	50.00	$12.80	$6.32	$0.00	$0.45	$0.00	$0.00	$0.00	$0.00	$0.00	$19.57	$25.96
2nd 6 months is 1st year	50.00	$12.80	$6.32	$0.00	$0.45	$0.00	$0.00	$0.00	$0.00	$0.00	$19.57	$25.96
3rd 6 months	55.00	$14.07	$6.32	$0.00	$0.45	$0.00	$0.00	$0.00	$0.00	$0.00	$20.84	$27.88
4th 6 months is 2nd year	60.00	$15.35	$6.32	$0.00	$0.45	$0.00	$0.00	$0.00	$0.00	$0.00	$22.12	$29.80
5th 6 months	70.00	$17.91	$6.32	$5.17	$0.45	$0.00	$1.53	$0.00	$0.00	$0.00	$31.38	$40.34
6th 6 months is 3rd year	75.00	$19.19	$6.32	$5.54	$0.45	$0.00	$1.64	$0.00	$0.00	$0.00	$33.14	$42.74
7th 6 months	80.00	$20.47	$6.32	$5.90	$0.45	$0.00	$1.74	$0.00	$0.00	$0.00	$34.88	$45.12
8th 6 month	85.00	$21.75	$6.32	$6.27	$0.45	$0.00	$1.85	$0.00	$0.00	$0.00	$36.64	$47.52

Special Calculation Note : No special calculations for this skilled craft wage rate are required at this time.

Ratio :

	Jurisdiction (* denotes special jurisdictional note) :
2 Journeymen to 1 Apprentice	ASHTABULA, CUYAHOGA, GEAUGA, LAKE

Special Jurisdictional Note :

Details :

Prevailing Wage Rate
Skilled Crafts

Name of Union: Carpenter Millwright NE District H

Change # : LCN01-2016fbLoc1090H

Craft : Carpenter Effective Date : 06/16/2016 Last Posted : 06/16/2016

	BHR		Fringe Benefit Payments						Irrevocable Fund		Total PWR	Overtime Rate
			H&W	Pension	App Tr.	Vac.	Annuity	Other	LECET (*)	MISC (*)		
Classification												
Carpenter Millwright	$29.76		$6.32	$7.73	$0.45	$0.00	$4.01	$0.05	$0.00	$0.00	$48.32	$63.20
Certified Welder	$30.76		$6.32	$7.73	$0.45	$0.00	$4.01	$0.05	$0.00	$0.00	$49.32	$64.70
Layout man on Monorail	$31.51		$6.32	$7.73	$0.45	$0.00	$4.01	$0.05	$0.00	$0.00	$50.07	$65.82
Apprentice	Percent											
1st 6 months	55.00	$16.37	$6.32	$7.73	$0.45	$0.00	$4.01	$0.05	$0.00	$0.00	$34.93	$43.11
2nd 6 months	58.50	$17.41	$6.32	$7.73	$0.45	$0.00	$4.01	$0.05	$0.00	$0.00	$35.97	$44.67
3rd 6 months	62.00	$18.45	$6.32	$7.73	$0.45	$0.00	$4.01	$0.05	$0.00	$0.00	$37.01	$46.24
4th 6 months	65.50	$19.49	$6.32	$7.73	$0.45	$0.00	$4.01	$0.05	$0.00	$0.00	$38.05	$47.80
5th 6 months	69.00	$20.53	$6.32	$7.73	$0.45	$0.00	$4.01	$0.05	$0.00	$0.00	$39.09	$49.36
6th 6 months	72.50	$21.58	$6.32	$7.73	$0.45	$0.00	$4.01	$0.05	$0.00	$0.00	$40.14	$50.92
7th 6 months	76.00	$22.62	$6.32	$7.73	$0.45	$0.00	$4.01	$0.05	$0.00	$0.00	$41.18	$52.49
8th 6 months	80.00	$23.81	$6.32	$7.73	$0.45	$0.00	$4.01	$0.05	$0.00	$0.00	$42.37	$54.27

Special Calculation Note : Other $0.05 is for UBC Millwright Promotional Fund

Ratio :

Jurisdiction (* denotes special jurisdictional note) :

3 Journeymen to 1 Apprentice	ASHLAND, ASHTABULA, CUYAHOGA, ERIE, GEAUGA, HURON, LAKE, LORAIN, MEDINA, PORTAGE, RICHLAND, SUMMIT

Special Jurisdictional Note :

Details :
If certain projects warrant a larger percentage of apprentices, it will be agreed to increase the ratio of apprentices to journeymen, but Not to exceed (1) Apprentice to (4) Journeymen.

The term "Millwright and Machine Erectors'" jurisdiction shall mean the unloading, hoisting, rigging, skidding, moving, dismantling, aligning, erecting, assembling, repairing, maintenance and adjusting of all structures, processing areas either under cover, under ground or elsewhere, required to process material, handle, manufacture or service, be it powered or receiving power manually, by steam, gas, electricity, gasoline, diesel, nuclear, solar, water, air or chemically, and in industries such as and including, which are identified for the purpose of description, but not limited to, the following: woodworking plants; canning industries; steel mills; coffee roasting plants; paper and pulp; cellophane; stone crushing; gravel and sand washing and handling; refineries; grain storage and handling; asphalt plants; sewage disposal; water plants; laundries; bakeries; mixing plants; can, bottle and bag packing plants; textile mills; paint mills; breweries; milk processing plants; power plants; aluminum processing or manufacturing plants; and amusement and entertainment fields. The installation of mechanical equipment in atomic energy plants; installation of reactors in power plants; installation of control rods and equipment in reactors; and installation of mechanical equipment in rocket missile bases, launchers, launching gantry, floating bases, hydraulic escape doors and any and all component parts thereto, either assembled, semi-assembled or disassembled. The installation of, but not limited to, the following: setting-up of all engines, motors, generators, air compressors, fans, pumps, scales, hoppers, conveyors of all types, sizes and their supports; escalators; man lifts; moving sidewalks; hoists; dumb waiters; all types of feeding machinery; amusement devices; mechanical pin setters and spotters in bowling alleys; refrigeration equipment; and the installation of all types of equipment necessary and required to process material either in the manufacturing or servicing. The handling and installation of pulleys, gears, sheaves, fly wheels, air and vacuum drives, worm drives and gear drives directly or indirectly coupled to motors, belts, chains, screws, legs, boots, guards, booth tanks, all bin valves, turn heads and indicators, shafting, bearings, cable sprockets, cutting all key seats in new and old work, troughs, chippers, filters, calendars, rolls, winders, rewinders, slitters, cutters, wrapping machines, blowers, forging machines, rams, hydraulic or otherwise, planing, extruder, ball, dust collectors, equipment in meat packing plants, splicing of ropes and cables. The laying-out, fabrication and installation of protection equipment including machinery guards, making and setting of templates for machinery, fabrication of bolts, nuts, pans, drilling of holes for any equipment which the Millwrights install regardless of materials; all welding and burning regardless of type, fabrication of all lines, hose or tubing used in lubricating machinery installed by Millwrights; grinding, cleaning, servicing and any machine work necessary for any part of any equipment installed by the Millwrights; and the break-in and trial run of any equipment or machinery installed by the Millwrights. It is agreed the Millwrights shall use the layout tools and optic equipment necessary to perform their work.

Prevailing Wage Rate
Skilled Crafts

Name of Union: Carpenter NE District Industrial Dock & Door

Change # : LCN01-2014fbCarpNEStatewide

Craft : Carpenter Effective Date : 03/05/2014 Last Posted : 03/05/2014

	BHR		Fringe Benefit Payments						Irrevocable Fund		Total PWR	Overtime Rate
			H&W	Pension	App Tr.	Vac.	Annuity	Other	LECET (*)	MISC (*)		
Classification												
Carpenter	$19.70		$5.05	$1.00	$0.15	$0.00	$0.00	$0.00	$0.00	$0.00	$25.90	$35.75
Trainee	Percent											
1st Year	60.00	$11.82	$5.05	$1.00	$0.15	$0.00	$0.00	$0.00	$0.00	$0.00	$18.02	$23.93
2nd Year	80.20	$15.80	$5.05	$1.00	$0.15	$0.00	$0.00	$0.00	$0.00	$0.00	$22.00	$29.90

Special Calculation Note : No special calculations for this skilled craft wage rate are required at this time.

Ratio :

1 Journeymen to 1 Trainee

Jurisdiction (* denotes special jurisdictional note) :

ADAMS, ALLEN, ASHLAND, ASHTABULA, ATHENS, AUGLAIZE, BELMONT, BROWN, BUTLER, CARROLL, CHAMPAIGN, CLARK, CLERMONT, CLINTON, COLUMBIANA, COSHOCTON, CRAWFORD, CUYAHOGA, DARKE, DEFIANCE, DELAWARE, ERIE, FAIRFIELD, FAYETTE, FRANKLIN, FULTON, GALLIA, GEAUGA, GREENE, GUERNSEY, HAMILTON, HANCOCK, HARDIN, HARRISON, HENRY, HIGHLAND, HOCKING, HOLMES, HURON, JACKSON, JEFFERSON, KNOX, LAKE, LAWRENCE, LICKING, LOGAN, LORAIN, LUCAS, MADISON, MAHONING, MARION, MEDINA, MEIGS, MERCER, MIAMI, MONROE,

MONTGOMERY, MORGAN, MORROW, MUSKINGUM, NOBLE, OTTAWA, PAULDING, PERRY, PICKAWAY, PIKE, PORTAGE, PREBLE, PUTNAM, RICHLAND, ROSS, SANDUSKY, SCIOTO, SENECA, SHELBY, STARK, SUMMIT, TRUMBULL, TUSCARAWAS, UNION, VAN WERT, VINTON, WARREN, WASHINGTON, WAYNE, WILLIAMS, WOOD, WYANDOT

Special Jurisdictional Note : Industrial Dock and Door is the installation of overhead doors, roll up doors and dock leveling equipment

Details :
10/27/10 New Contract jc

Prevailing Wage Rate
Skilled Crafts

Name of Union: Carpenter Pile Driver NE District M

Change # : LCN01-2016fbLoc1090M

Craft : Carpenter Effective Date : 06/16/2016 Last Posted : 06/16/2016

	BHR		Fringe Benefit Payments						Irrevocable Fund		Total PWR	Overtime Rate
			H&W	Pension	App Tr.	Vac.	Annuity	Other	LECET (*)	MISC (*)		
Classification												
Carpenter Pile Driver	$30.09		$6.32	$7.73	$0.45	$0.00	$3.73	$0.00	$0.00	$0.00	$48.32	$63.37
Diver	$45.14		$6.32	$7.73	$0.45	$0.00	$3.73	$0.00	$0.00	$0.00	$63.37	$85.94
Certified Welder	$31.14		$6.32	$7.73	$0.45	$0.00	$3.73	$0.00	$0.00	$0.00	$49.37	$64.94
Apprentice	Percent											
1st 6 months	55.00	$16.55	$6.32	$7.73	$0.45	$0.00	$3.73	$0.00	$0.00	$0.00	$34.78	$43.05
2nd 6 months	58.50	$17.60	$6.32	$7.73	$0.45	$0.00	$3.73	$0.00	$0.00	$0.00	$35.83	$44.63
3rd 6 months	62.00	$18.66	$6.32	$7.73	$0.45	$0.00	$3.73	$0.00	$0.00	$0.00	$36.89	$46.21
4th 6 months	65.50	$19.71	$6.32	$7.73	$0.45	$0.00	$3.73	$0.00	$0.00	$0.00	$37.94	$47.79
5th 6 months	69.00	$20.76	$6.32	$7.73	$0.45	$0.00	$3.73	$0.00	$0.00	$0.00	$38.99	$49.37
6th 6 months	72.50	$21.82	$6.32	$7.73	$0.45	$0.00	$3.73	$0.00	$0.00	$0.00	$40.05	$50.95
7th 6 months	76.00	$22.87	$6.32	$7.73	$0.45	$0.00	$3.73	$0.00	$0.00	$0.00	$41.10	$52.53
8th 6 months	80.00	$24.07	$6.32	$7.73	$0.45	$0.00	$3.73	$0.00	$0.00	$0.00	$42.30	$54.34

Special Calculation Note : No special calculations for this skilled craft wage rate are required at this time.

Ratio :

3 Journeymen to 1 Apprentice

Jurisdiction (* denotes special jurisdictional note) :

ASHLAND, ASHTABULA, CUYAHOGA,
ERIE, GEAUGA, HURON, LAKE, LORAIN,
MEDINA, PORTAGE, RICHLAND, SUMMIT

Special Jurisdictional Note :

Details :

If certain projects warrant a larger percentage of apprentices, it will be agreed to increase the ratio of apprentices to journeymen, but Not to exceed (1) Apprentice to (2) Journeymen.
Employees working with creosoted,chemically treated or toxic materials shall receive $.50 in addition to regular rate. Pile Drivers duties shall include but not limited to: Pile driving, milling, fashioning, joining assembling, erecting, fastening, or dismantling of all material of wood, plastic, metal, fiber, cork and composition and all other substitute materials: pile driving, cutting, fitting and placing of lagging, and the handling, cleaning, erecting, installing and dismantling of machinery, equipment and erecting pre-engineered metal buildings. Pile Drivers work but not limited to: unloading, assembling, erection, repairs, operation, signaling, dismantling and reloading all equipment that is used for pile driving including pule butts is defined as sheeting or scrap piling. Underwater work that may be required in connection with the installation of piling. The driver and his tender work as a team and shall arrive at their own financial arrangements with the contractor. Any configuration of wood, steel, concrete or composite that is jetted, driven or vibrated onto the ground by conventional pile driving equipment for the purpose of supporting a future load that may be permanent or temporary. The construction of all wharves and docks, including the fabrication and installation of floating docks. Driving bracing, plumbing, cutting off and capping of all piling whether wood, metal, pipe piling or composite, loading, unloading, erecting, framing, dismantling, moving and handling of pile driving equipment piling used in the construction and repair of all wharves, docks, piers, trestles, caissons, cofferdams and erection of all sea walls and breakwaters. All underwater and marine work on bulkheads, wharves, docks, shipyards, caissons, piers, bridges, pipeline, work, viaducts, marine cable and trestles, as well as salvage and reclamation work where divers are employed. Rate shall include carpenters, acoustic and ceiling installers, drywall installers, pile drivers and floorlayers.

Prevailing Wage Rate
Skilled Crafts

Name of Union: Cement Mason Bricklayer Local 97 HevHwy A

Change # : LCN01-2016fbHvyHwy

Craft : Bricklayer Effective Date : 06/29/2016 Last Posted : 06/29/2016

	BHR		Fringe Benefit Payments						Irrevocable Fund		Total PWR	Overtime Rate
			H&W	Pension	App Tr.	Vac.	Annuity	Other	LECET (*)	MISC (*)		
Classification												
Cement Mason Bricklayer Sewer Water Treatment A	$28.55		$7.75	$5.48	$0.42	$0.00	$0.00	$0.00	$0.00	$0.00	$42.20	$56.48
Apprentice	Percent											
1st year	50.00	$14.28	$7.75	$5.48	$0.42	$0.00	$0.00	$0.00	$0.00	$0.00	$27.92	$35.06
2nd year	70.01	$19.99	$7.75	$5.48	$0.42	$0.00	$0.00	$0.00	$0.00	$0.00	$33.64	$43.63
3rd year	90.01	$25.70	$7.75	$5.48	$0.42	$0.00	$0.00	$0.00	$0.00	$0.00	$39.35	$52.20

Special Calculation Note : NOT FOR BUILDING CONSTRUCTION.

Ratio :

3 Journeymen to 1 Apprentice
6 Journeymen to 2 Apprentice
9 Journeymen to 3 Apprentice
12 Journeymen to 4 Apprentice
15 Journeymen to 5 Apprentice

Jurisdiction (* denotes special jurisdictional note) :

ADAMS, ALLEN, ASHLAND, ASHTABULA, ATHENS, AUGLAIZE, BELMONT, BROWN, BUTLER, CARROLL, CHAMPAIGN, CLARK, CLERMONT, CLINTON, COLUMBIANA, COSHOCTON, CRAWFORD, CUYAHOGA, DARKE, DEFIANCE, DELAWARE, ERIE, FAIRFIELD, FAYETTE, FRANKLIN, FULTON, GALLIA, GEAUGA, GREENE, GUERNSEY, HAMILTON, HANCOCK, HARDIN, HARRISON, HENRY, HIGHLAND, HOCKING, HOLMES, HURON, JACKSON, JEFFERSON,

KNOX, LAKE, LAWRENCE, LICKING, LOGAN, LORAIN, LUCAS, MADISON, MAHONING, MARION, MEDINA, MEIGS, MERCER, MIAMI, MONROE, MONTGOMERY, MORGAN, MORROW, MUSKINGUM, NOBLE, OTTAWA, PAULDING, PERRY, PICKAWAY, PIKE, PORTAGE, PREBLE, PUTNAM, RICHLAND, ROSS, SANDUSKY, SCIOTO, SENECA, SHELBY, STARK, SUMMIT, TRUMBULL, TUSCARAWAS, UNION, VAN WERT, VINTON, WARREN, WASHINGTON, WAYNE

Special Jurisdictional Note :

Details :

(A) Highway Construction, Sewer, Waterworks And Utility Construction, Industrial & Building Site Heavy Construction, Airport Construction Or Railroad Construction Work.
(B) Power Plant, Tunnels, Amusement Park, Athletic Stadium Site Work ,Pollution Control,Sewer Plant, Waste Plant, & Water Treatment Facilities, Construction.

Prevailing Wage Rate
Skilled Crafts

Name of Union: Cement Mason Bricklayer Local 97 HevHwy B

Change # : LCN01-2015fbHvyHwy

Craft : Bricklayer Effective Date : 06/03/2015 Last Posted : 06/03/2015

	BHR		Fringe Benefit Payments						Irrevocable Fund		Total PWR	Overtime Rate
			H&W	Pension	App Tr.	Vac.	Annuity	Other	LECET (*)	MISC (*)		
Classification												
Cement Mason Bricklayer Power Plants Tunnels Amusement Parks B	$29.48		$7.45	$4.75	$0.42	$0.00	$0.00	$0.00	$0.00	$0.00	$42.10	$56.84
Apprentice	Percent											
1st year	50.00	$14.74	$7.45	$4.75	$0.42	$0.00	$0.00	$0.00	$0.00	$0.00	$27.36	$34.73
2nd year	70.00	$20.64	$7.45	$4.75	$0.42	$0.00	$0.00	$0.00	$0.00	$0.00	$33.26	$43.57
3rd year	90.00	$26.53	$7.45	$4.75	$0.42	$0.00	$0.00	$0.00	$0.00	$0.00	$39.15	$52.42

Special Calculation Note : NOT FOR BUILDING CONSTRUCTION.

Ratio :

3 Journeymen to 1 Apprentice
6 Journeymen to 2 Apprentice
9 Journeymen to 2 Apprentice
12 Journeymen to 4 Apprentice
15 Journeymen to 5 Apprentice

Jurisdiction (* denotes special jurisdictional note) :

ADAMS, ALLEN, ASHLAND, ASHTABULA, ATHENS, AUGLAIZE, BELMONT, BROWN, BUTLER, CARROLL, CHAMPAIGN, CLARK, CLERMONT, CLINTON, COLUMBIANA, COSHOCTON, CRAWFORD, CUYAHOGA, DARKE, DEFIANCE, DELAWARE, ERIE, FAIRFIELD, FAYETTE, FRANKLIN, FULTON, GALLIA, GEAUGA, GREENE, GUERNSEY, HAMILTON, HANCOCK, HARDIN, HARRISON, HENRY, HIGHLAND, HOCKING,

HOLMES, HURON, JACKSON, JEFFERSON, KNOX, LAKE, LAWRENCE, LICKING, LOGAN, LORAIN, LUCAS, MADISON, MAHONING, MARION, MEDINA, MEIGS, MERCER, MIAMI, MONROE, MONTGOMERY, MORGAN, MORROW, MUSKINGUM, NOBLE, OTTAWA, PAULDING, PERRY, PICKAWAY, PIKE, PORTAGE, PREBLE, PUTNAM, RICHLAND, ROSS, SANDUSKY, SCIOTO, SENECA, SHELBY, STARK, SUMMIT, TRUMBULL, TUSCARAWAS, UNION, VAN WERT, VINTON, WARREN, WASHINGTON, WAYNE

Special Jurisdictional Note :

Details :

(A) Highway Construction, Sewer, Waterworks And Utility Construction, Industrial & Building Site Heavy Construction, Airport Construction Or Railroad Construction Work.
(B) Power Plant, Tunnels, Amusement Park, Athletic Stadium Site Work ,Pollution Control,Sewer Plant, Waste Plant, & Water Treatment Facilities, Construction.

Prevailing Wage Rate
Skilled Crafts

Name of Union: Cement Mason Local 132 HvyHwy District I (A)

Change # : LCN01-2015fbHvyHwy

Craft : Cement Mason Effective Date : 05/07/2015 Last Posted : 05/07/2015

	BHR		Fringe Benefit Payments						Irrevocable Fund		Total PWR	Overtime Rate
			H&W	Pension	App Tr.	Vac.	Annuity	Other	LECET (*)	MISC (*)		
Classification												
Cement Mason (A)	$27.80		$7.19	$6.00	$0.55	$0.00	$2.10	$0.00	$0.00	$0.00	$43.64	$57.54
Apprentice	Percent											
1st Year	60.00	$16.68	$7.19	$6.00	$0.55	$0.00	$2.10	$0.00	$0.00	$0.00	$32.52	$40.86
2nd Year	75.00	$20.85	$7.19	$6.00	$0.55	$0.00	$2.10	$0.00	$0.00	$0.00	$36.69	$47.12
3rd Year	90.00	$25.02	$7.19	$6.00	$0.55	$0.00	$2.10	$0.00	$0.00	$0.00	$40.86	$53.37

Special Calculation Note : Work performed in accordance with detail (B) please see Cement Mason HevHwy District 1 (B) wage sheet

Ratio :

2 Journeymen to 1 Apprentice
Company Wide

Jurisdiction (* denotes special jurisdictional note) :
ASHTABULA, CUYAHOGA, FULTON, GEAUGA, HANCOCK, HENRY, LAKE, LUCAS, PUTNAM, WOOD

Special Jurisdictional Note :

Details :
(A) Highway Construction, Sewer, Waterworks And Utility Construction, Industrial & Building Site, Heavy Construction, Airport Construction Or Railroad Construction Work.
(B) Power Plant, Tunnels, Amusement Park, Athletic Stadium Site Work ,Pollution Control,Sewer Plant, Waste Plant, & Water Treatment Facilities, Construction.

Prevailing Wage Rate
Skilled Crafts

Name of Union: Cement Mason Local 132 HvyHwy District I (B)

Change # : LCN01-2015fbHvyHwy

Craft : Cement Mason Effective Date : 05/07/2015 Last Posted : 05/07/2015

	BHR		Fringe Benefit Payments						Irrevocable Fund		Total PWR	Overtime Rate
			H&W	Pension	App Tr.	Vac.	Annuity	Other	LECET (*)	MISC (*)		
Classification												
Cement Mason (B)	$29.27		$7.19	$6.00	$0.55	$0.00	$2.10	$0.00	$0.00	$0.00	$45.11	$59.75
Apprentice	Percent											
1st Year	60.00	$17.56	$7.19	$6.00	$0.55	$0.00	$2.10	$0.00	$0.00	$0.00	$33.40	$42.18
2nd Year	75.00	$21.95	$7.19	$6.00	$0.55	$0.00	$2.10	$0.00	$0.00	$0.00	$37.79	$48.77
3rd Year	90.00	$26.34	$7.19	$6.00	$0.55	$0.00	$2.10	$0.00	$0.00	$0.00	$42.18	$55.35

Special Calculation Note : Work performed in accordance with detail (A) please see Cement Mason HevHwy District 1 (A) wage sheet

Ratio :

2 Journeymen to 1 Apprentice
Company Wide

Jurisdiction (* denotes special jurisdictional note) :
ASHTABULA, CUYAHOGA, FULTON, GEAUGA, HANCOCK, HENRY, LAKE, LUCAS, PUTNAM, WOOD

Special Jurisdictional Note :

Details :
(A) Highway Construction, Sewer, Waterworks And Utility Construction, Industrial & Building Site, Heavy Construction, Airport Construction Or Railroad Construction Work.
(B) Power Plant, Tunnels, Amusement Park, Athletic Stadium Site Work ,Pollution Control,Sewer Plant, Waste Plant, & Water Treatment Facilities, Construction.

Prevailing Wage Rate
Skilled Crafts

Name of Union: Cement Mason Local 404

Change # : LCN01-2016fbLoc404

Craft : Cement Effective Date : 06/24/2016 Last Posted : 06/24/2016

	BHR		Fringe Benefit Payments						Irrevocable Fund		Total PWR	Overtime Rate
			H&W	Pension	App Tr.	Vac.	Annuity	Other	LECET (*)	MISC (*)		
Classification												
Cement Mason	$30.50		$8.02	$5.30	$0.40	$0.00	$4.50	$0.18	$0.00	$0.00	$48.90	$64.15
Apprentice	Percent											
1st yr	57.38	$17.50	$8.02	$5.30	$0.40	$0.00	$2.25	$0.18	$0.00	$0.00	$33.65	$42.40
2nd yr	72.40	$22.08	$8.02	$5.30	$0.40	$0.00	$2.25	$0.18	$0.00	$0.00	$38.23	$49.27
3rd yr	82.39	$25.13	$8.02	$5.30	$0.40	$0.00	$2.25	$0.18	$0.00	$0.00	$41.28	$53.84

Special Calculation Note : No special calculations for this skilled craft wage rate are required at this time. Other is Service Program

Ratio :

4 Journeymen to 1 Apprentice employed by a contractor

Jurisdiction (* denotes special jurisdictional note) :

ASHTABULA, CUYAHOGA, GEAUGA, LAKE, LORAIN

Special Jurisdictional Note :

Details :

Prevailing Wage Rate
Skilled Crafts

Name of Union: Electrical Local 673 Inside

Change # : LCN01-2016fbLoc673in

Craft : Electrical Effective Date : 06/16/2016 Last Posted : 06/16/2016

	BHR		Fringe Benefit Payments						Irrevocable Fund		Total PWR	Overtime Rate
			H&W	Pension	App Tr.	Vac.	Annuity	Other	LECET (*)	MISC (*)		
Classification												
Electrician	$33.24		$9.03	$7.05	$0.60	$0.00	$2.10	$0.00	$0.00	$0.00	$52.02	$68.64
Cable Splicers	$33.49		$9.03	$7.06	$0.60	$0.00	$2.10	$0.00	$0.00	$0.00	$52.28	$69.02
Welders	$34.24		$9.03	$7.06	$0.60	$0.00	$2.10	$0.00	$0.00	$0.00	$53.03	$70.15
Apprentice	Percent											
1st Period	35.00	$11.63	$9.03	$0.35	$0.60	$0.00	$0.00	$0.00	$0.00	$0.00	$21.61	$27.43
2nd Period	40.00	$13.30	$9.03	$0.40	$0.60	$0.00	$0.00	$0.00	$0.00	$0.00	$23.33	$29.97
3rd Period	50.00	$16.62	$9.03	$6.55	$0.60	$0.00	$2.10	$0.00	$0.00	$0.00	$34.90	$43.21
4th Period	60.00	$19.94	$9.03	$6.65	$0.60	$0.00	$2.10	$0.00	$0.00	$0.00	$38.32	$48.30
5th Period	70.00	$23.27	$9.03	$6.75	$0.60	$0.00	$2.10	$0.00	$0.00	$0.00	$41.75	$53.38
6th Period	85.00	$28.25	$9.03	$6.90	$0.60	$0.00	$2.10	$0.00	$0.00	$0.00	$46.88	$61.01

Special Calculation Note : Pension calculation for journeymen shall be $6.05 per hour paid plus 3% of gross. Pension calculation for Apprentices is equal to 3% for first two years then, $6.05 per hour paid plus 3% of gross.

Ratio :

The first person assigned to a job site shall be a Journeyman Wireman. Each job site shall be allowed a ratio of 2 Apprentice for every 3 Journeymen Wireman or fraction thereof:
1 to 3 Journeymen to 2 Apprentices
4 to 6 Journeymen to 4 Apprentices
7 to 9 Journeymen to 6 Apprentices

Jurisdiction (* denotes special jurisdictional note) :
ASHTABULA*, GEAUGA*, LAKE

Special Jurisdictional Note : The following townships In Ashtabula County are

EXCLUDED: Orwell, Colebrook, Williamsfield, Wayne and Windsor.

In Geauga County the following townships are INCLUDED: Burton, Chardon, Claridon, Hambden, Huntsburg, Montville, Munson, Newbury and Thompson.

Details :
High Pay: 45 feet above ground or floor shall be paid $2.00 over Journeyman Scale.
If required to climb on steel, potain crane, etc., that is High Time.

NOTE: If approved scaffolding with handrails, toe boards, netting, bucket trucks, JLG, decks with proper handrails are used No High Time Shall be paid.

Prevailing Wage Rate
Skilled Crafts

Name of Union: Electrical Local 673 Inside Lt Commercial Northern

Change # : LCN01-2015fbLoc673in

Craft : Electrical Effective Date : 06/10/2015 Last Posted : 06/10/2015

	BHR		Fringe Benefit Payments						Irrevocable Fund		Total PWR	Overtime Rate
			H&W	Pension	App Tr.	Vac.	Annuity	Other	LECET (*)	MISC (*)		
Classification												
Electrician	$33.37		$8.70	$6.65	$0.60	$0.00	$2.10	$0.00	$0.00	$0.00	$51.42	$68.10
Cable Splicers	$33.62		$8.70	$6.65	$0.60	$0.00	$2.10	$0.00	$0.00	$0.00	$51.67	$68.48
Welders	$34.37		$8.70	$6.65	$0.60	$0.00	$2.10	$0.00	$0.00	$0.00	$52.42	$69.60
CE-3 12,001-14,000 Hrs	$23.48		$5.01	$0.70	$0.74	$0.00	$0.70	$0.00	$0.11	$0.00	$30.74	$42.48
CE-2 10,001-12,000 Hrs	$18.45		$5.01	$0.55	$0.74	$0.00	$0.55	$0.00	$0.11	$0.00	$25.41	$34.63
CE-1 8,001-10,000 Hrs	$16.77		$5.01	$0.50	$0.74	$0.00	$0.50	$0.00	$0.11	$0.00	$23.63	$32.02
CW-4 6,001-8,000 Hrs	$15.09		$5.01	$0.45	$0.74	$0.00	$0.45	$0.00	$0.11	$0.00	$21.85	$29.39
CW-3 4,001-6,000 Hrs	$13.42		$5.01	$0.40	$0.74	$0.00	$0.40	$0.00	$0.11	$0.00	$20.08	$26.79
CW-2 2,001-4,000 Hrs	$11.74		$5.01	$0.35	$0.74	$0.00	$0.35	$0.00	$0.11	$0.00	$18.30	$24.17
CW-1 0-2,000 Hrs	$11.74		$5.01	$0.35	$0.74	$0.00	$0.35	$0.00	$0.11	$0.00	$18.30	$24.17
Apprentice	Percent											
1st 6 months	35.00	$11.68	$8.70	$0.35	$0.60	$0.00	$0.00	$0.00	$0.00	$0.00	$21.33	$27.17
2nd 6 months	40.00	$13.35	$8.70	$0.40	$0.60	$0.00	$0.00	$0.00	$0.00	$0.00	$23.05	$29.72
2nd year	50.02	$16.69	$8.70	$6.15	$0.60	$0.00	$2.10	$0.00	$0.00	$0.00	$34.24	$42.59
3rd year	60.00	$20.02	$8.70	$6.25	$0.60	$0.00	$2.10	$0.00	$0.00	$0.00	$37.67	$47.68
4th year	70.00	$23.36	$8.70	$6.35	$0.60	$0.00	$2.10	$0.00	$0.00	$0.00	$41.11	$52.79

5th year	85.00	$28.36	$8.70	$6.50	$0.60	$0.00	$2.10	$0.00	$0.00	$0.00	$46.26	$60.45

Special Calculation Note : Pension calculation for journeymen shall be $5.38 per hour paid plus 3% of gross. Pension calculation for Apprentices is equal to 3% for first two years then, $5.38 per hour paid plus 3% of gross. Other for $0.11 is for Aministration Fund.

Ratio :

Each job site shall be allowed a ratio of
2 Apprentice for every 3
Journeymen Wireman or fraction thereof:
1 to 3 Journeymen to 2 Apprentices
4 to 6 Journeymen to 4 Apprentices
7 to 9 Journeymen to 6 Apprentices

Construction Electrician and Construction
Wireman Ratio
There shall be a minimum ratio of one inside
Journeyman Wireman to every (4) employees of
different classifications per jobsite. An Inside
Journeyman Wireman is required on the project as
the fifth (5th) worker or when apprentices are used

Jurisdiction (* denotes special jurisdictional note) :
ASHTABULA*, GEAUGA*, LAKE

Special Jurisdictional Note : The following townships In Ashtabula County are EXCLUDED: Orwell, Colebrook, Williamsfield, Wayne and Windsor.

In Geauga County the following townships are INCLUDED: Burton, Chardon, Claridon, Hambden, Huntsburg, Montville, Munson, Newbury and Thompson.

The scope of work for the light commercial agreement shall apply to the following small medical clinics, stand-alone doctor and dentist offices with up to 600 amp service (not attached to a hospital), gas stations/convenience stores, fast food restaurants and franchised chain restaurants including independent bars and taverns, places of worship, funeral homes, nursing homes, assisted living facilities and day-care facilities under 15,000 sq ft, small office, retail/wholesale facilities under 15,000 sq ft with less than 10 units attached, storage units, car washes, express hotels and motels (4 stories or less) without conference or restaurants facilities, residential units (subject to Davis Bacon Rates) small stand-alone manufacturing facilities when free standing and not part of a larger facility (less than 15,000 sq ft) solar projects (500 panels or less) unless other wise covered under this agreement, lighting retrofits (when not associated with remodels involving branch re-circuiting) Lighting retrofits shall be defined as the changing of lamps and ballasts in existing light fixtures and shall also include the one for one replacement of existing fixtures.

Details :
High Pay: 45 feet above ground or floor shall be paid $2.00 over Journeyman Scale.
If required to climb on steel, potain crane, etc., that is High Time.

NOTE: If approved scaffolding with handrails, toe boards, netting, bucket trucks, JLG, decks with

proper handrails are used No High Time Shall be paid.

Prevailing Wage Rate
Skilled Crafts

Name of Union: Electrical Local 673 Lightning Rod

Change # : LCN01-2015fbLoc673

Craft : Electrical Effective Date : 08/05/2015 Last Posted : 08/05/2015

	BHR		Fringe Benefit Payments						Irrevocable Fund		Total PWR	Overtime Rate
			H&W	Pension	App Tr.	Vac.	Annuity	Other	LECET (*)	MISC (*)		
Classification												
Electrical Lightning Protection	$27.09		$7.00	$0.81	$0.00	$1.93	$1.64	$0.00	$0.00	$0.00	$38.47	$52.02
Experience Level	**Percent**											
Lightning Protection Installer 1st day-6 months	50.00	$13.55	$7.00	$0.41	$0.00	$0.36	$0.82	$0.00	$0.00	$0.00	$22.14	$28.91
Lightning Protection Installer 2nd 6 months	55.00	$14.90	$7.00	$0.45	$0.00	$0.40	$0.90	$0.00	$0.00	$0.00	$23.65	$31.10
Lightning Protection Installer 3rd 6th months	60.00	$16.25	$7.00	$0.49	$0.00	$0.79	$0.99	$0.00	$0.00	$0.00	$25.52	$33.65
Lightning Protection Installer 4th 6 months months	65.00	$17.61	$7.00	$0.53	$0.00	$0.86	$1.07	$0.00	$0.00	$0.00	$27.07	$35.87
Lightning Protection Installer 3rd Year	70.00	$18.96	$7.00	$0.57	$0.00	$1.35	$1.15	$0.00	$0.00	$0.00	$29.03	$38.51
	80.03	$21.68	$7.00	$0.65	$0.00	$1.54	$1.31	$0.00	$0.00	$0.00	$32.18	$43.02

Lightning Protection Installer 4th Year												
Lightning Protection Installer 5th Year	90.00	$24.38	$7.00	$0.73	$0.00	$1.73	$1.48	$0.00	$0.00	$0.00	$35.32	$47.51

Special Calculation Note :

Ratio :

3 Journeyman to 1 Apprentice

Jurisdiction (* denotes special jurisdictional note) :

ASHTABULA, GEAUGA, LAKE

Special Jurisdictional Note :

Details :

Prevailing Wage Rate
Skilled Crafts

Name of Union: Electrical Local 673 Voice Data Video

Change # : LCN01-2015fbLoc673VDV

Craft : Voice Data Video Effective Date : 06/24/2015 Last Posted : 06/24/2015

	BHR		Fringe Benefit Payments						Irrevocable Fund		Total PWR	Overtime Rate
			H&W	Pension	App Tr.	Vac.	Annuity	Other	LECET (*)	MISC (*)		
Classification												
Electrical Installer Technician	$25.55		$5.68	$0.77	$0.60	$0.00	$1.95	$0.00	$0.00	$0.00	$34.55	$47.33
Communication Technician	$26.30		$5.68	$0.79	$0.60	$0.00	$1.95	$0.00	$0.00	$0.00	$35.32	$48.47
Senior Technician	$26.80		$5.68	$0.80	$0.60	$0.00	$1.95	$0.00	$0.00	$0.00	$35.83	$49.23
Apprentice	**Percent**											
1st 6 Months 750 hrs OJT w/satisfactory progress in related training & on the job	55.00	$14.05	$5.68	$0.42	$0.60	$0.00	$1.95	$0.00	$0.00	$0.00	$22.70	$29.73
2nd 6 Months 750 hrs additional OJT w/completion of first yr training	65.00	$16.61	$5.68	$0.50	$0.60	$0.00	$1.95	$0.00	$0.00	$0.00	$25.34	$33.64
2nd yr 750 hrs additional OJT w/satisfactory progress in related training & on the job	75.00	$19.16	$5.68	$0.57	$0.60	$0.00	$1.95	$0.00	$0.00	$0.00	$27.96	$37.54
3rd yr 750 hrs additional OJT w/completion of 2nd yr training	80.00	$20.44	$5.68	$0.61	$0.60	$0.00	$1.95	$0.00	$0.00	$0.00	$29.28	$39.50
	85.00	$21.72	$5.68	$0.65	$0.60	$0.00	$1.95	$0.00	$0.00	$0.00	$30.60	$41.46

4th yr 750 hrs OJT w/satisfactory progress in related training & on the job												
5th yr 750 hrs additional OJT w/completion of 3rd yr related training	90.00	$23.00	$5.68	$0.69	$0.60	$0.00	$1.95	$0.00	$0.00	$0.00	$31.92	$43.41

Special Calculation Note : No special calculations for this skilled craft wage rate are required at this time.

Ratio :

1 to 3 Journeyman to 2 Apprentice
4 to 6 Journeyman to 4 Apprentice
7 to 9 Journeyman to 6 Apprentices

Jurisdiction (* denotes special jurisdictional note) :
ASHTABULA*, GEAUGA*, LAKE

Special Jurisdictional Note : In Ashtabula County the following townships are excluded: (Orwell, Colebrook, Williamsfield, Wayne and Windsor). In Geauga County the following townships are included: (Burton, Chardon, Claridon, Hambden, Huntsburg, Montville, Munson, Newbury and Thompson)

Details :
The following work is EXCLUDED from the Teledata Technician work scope:
The installation of computer systems in industrial applications such as assembly lines, robotics, computer controller manufacturing systems.
The installation of conduit and/ or raceways shall be installed by Inside Wireman . On sites where there is no Inside Wireman employed, the Teledata Technician may install raceway, or conduit not greater then 10 ft.
Fire Alarm work is excluded on all new construction sites or wherever the fire alarm system is installed in conduit
All HVAC control work.

*Installer Technician: Successful completion of the Installer/Technician Apprenticeship Program or have been certified by the IBEW/NECA Joint Apprenticeship and Training Program as an Installer/Technician.
*Communications Technician: At least 2 years experience as a Installer/Technician and a minimum of 12 hours continuous related education or have been certified by an IBEW/NECA Joint Apprenticeship Training Program as a Communication Technician.

Prevailing Wage Rate
Skilled Crafts

Name of Union: Electrical Local 71
DOT Traffic Signal Highway Lighting Cleveland

Change # : LCN1-2016fbLoc71DOTClev

Craft : Lineman Effective Date : 01/14/2016 Last Posted : 01/14/2016

	BHR		Fringe Benefit Payments						Irrevocable Fund		Total PWR	Overtime Rate
			H&W	Pension	App Tr.	Vac.	Annuity	Other	LECET (*)	MISC (*)		
Classification												
Electrical Lineman	$34.78		$5.25	$1.04	$0.35	$0.00	$7.30	$0.00	$0.00	$0.00	$48.72	$66.11
Technician	$34.78		$5.25	$1.04	$0.35	$0.00	$7.30	$0.00	$0.00	$0.00	$48.72	$66.11
Equipment Operator	$31.30		$5.25	$0.94	$0.31	$0.00	$6.57	$0.00	$0.00	$0.00	$44.37	$60.02
Groundman 0 to 1 Year	$20.86		$5.25	$0.63	$0.21	$0.00	$4.38	$0.00	$0.00	$0.00	$31.33	$41.76
Groundman 1 Year or more	$24.34		$5.25	$0.73	$0.24	$0.00	$5.11	$0.00	$0.00	$0.00	$35.67	$47.84
Traffic Apprentice	**Percent**											
1st 1,000 Hours	60.00	$20.87	$5.25	$0.63	$0.21	$0.00	$4.38	$0.00	$0.00	$0.00	$31.34	$41.77
2nd 1,000 Hours	65.00	$22.61	$5.25	$0.68	$0.23	$0.00	$4.75	$0.00	$0.00	$0.00	$33.52	$44.82
3rd 1,000 Hours	70.01	$24.35	$5.25	$0.73	$0.24	$0.00	$5.11	$0.00	$0.00	$0.00	$35.68	$47.85
4th 1,000 Hours	75.00	$26.08	$5.25	$0.78	$0.26	$0.00	$5.48	$0.00	$0.00	$0.00	$37.86	$50.90
5th 1,000 Hours	80.00	$27.82	$5.25	$0.83	$0.28	$0.00	$5.84	$0.00	$0.00	$0.00	$40.02	$53.94
6th 1,000 Hours	90.00	$31.30	$5.25	$0.94	$0.31	$0.00	$6.57	$0.00	$0.00	$0.00	$44.37	$60.02

Special Calculation Note : No special calculations for this skilled craft wage rate are required at this time.

Ratio :

1 Journeymen to 1 Apprentice

Jurisdiction (* denotes special jurisdictional note) :

ASHTABULA, CUYAHOGA, GEAUGA, LAKE, LORAIN

Special Jurisdictional Note :

Details :

A groundman when directed shall assist a Journeymen in the performance of his/her work on the ground, including the use of hand tools. Under no circumstances shall this classification climb poles, towers, ladders, or work from an elevated platform or bucket truck. This classification shall not perform work normally assigned to an apprentice lineman. There shall be no more than one (1) Groundman for each two (2) Journeyman except when performing DOT Traffic Signal or Highway lighting work where the ratio can be two (2) Groundman for each Journeyman or Operator.

Prevailing Wage Rate
Skilled Crafts

Name of Union: Electrical Local 71 Cleveland Commercial Projects

Change # : LCN1-2016fbLoc71Clev

Craft : Lineman Effective Date : 01/14/2016 Last Posted : 01/14/2016

	BHR		Fringe Benefit Payments						Irrevocable Fund		Total PWR	Overtime Rate
			H&W	Pension	App Tr.	Vac.	Annuity	Other	LECET (*)	MISC (*)		
Classification												
Electrical Lineman	$43.66		$5.25	$1.31	$0.44	$0.00	$9.17	$0.00	$0.00	$0.00	$59.83	$81.66
Cable Splicer	$43.66		$5.25	$1.31	$0.44	$0.00	$9.17	$0.00	$0.00	$0.00	$59.83	$81.66
Equip. Operator	$39.29		$5.25	$1.18	$0.39	$0.00	$8.25	$0.00	$0.00	$0.00	$54.36	$74.01
Groundman 0 to 12 months	$26.19		$5.25	$0.79	$0.26	$0.00	$5.50	$0.00	$0.00	$0.00	$37.99	$51.09
Groundman 1 year plus	$30.56		$5.25	$0.92	$0.31	$0.00	$6.42	$0.00	$0.00	$0.00	$43.46	$58.74
Apprentice Linemen	Percent											
1st 1000 Hrs	60.01	$26.20	$5.25	$0.79	$0.26	$0.00	$5.50	$0.00	$0.00	$0.00	$38.00	$51.10
2nd 1000 Hrs	65.01	$28.38	$5.25	$0.85	$0.28	$0.00	$5.96	$0.00	$0.00	$0.00	$40.72	$54.92
3rd 1000 Hrs	70.01	$30.57	$5.25	$0.92	$0.31	$0.00	$6.42	$0.00	$0.00	$0.00	$43.47	$58.75
4th 1000 Hrs	75.01	$32.75	$5.25	$0.98	$0.33	$0.00	$6.88	$0.00	$0.00	$0.00	$46.19	$62.56
5th 1000 Hrs	80.01	$34.93	$5.25	$1.05	$0.35	$0.00	$7.34	$0.00	$0.00	$0.00	$48.92	$66.39
6th 1000 Hrs	85.01	$37.12	$5.25	$1.11	$0.37	$0.00	$7.80	$0.00	$0.00	$0.00	$51.65	$70.20
7th 1000 Hrs	90.01	$39.30	$5.25	$1.18	$0.39	$0.00	$8.25	$0.00	$0.00	$0.00	$54.37	$74.02

Special Calculation Note : No special calculations for this skilled craft wage rate are required at this time.

Ratio :

1 Journeymen to 1 Apprentice

Jurisdiction (* denotes special jurisdictional note) :

ASHTABULA, CUYAHOGA, GEAUGA, LAKE, LORAIN

Special Jurisdictional Note :

Details :

A groundman when directed shall assist a Journeymen in the performance of his/her work on the ground, including the use of hand tools. Under no circumstances shall this classification climb poles, towers, ladders, or work from an elevated platform or bucket truck. This classification shall not perform work normally assigned to an apprentice lineman. There shall be no more than one (1) Groundman for each two (2) Journeyman except when performing DOT Traffic Signal or Highway lighting work where the ratio can be two (2) Groundman for each Journeyman or Operator.

Prevailing Wage Rate
Skilled Crafts

Name of Union: Electrical Local 71 Cleveland Municipal Power & Transit

Change # : LCON1-2016fbLoc71Clev

Craft : Lineman Effective Date : 01/14/2016 Last Posted : 01/14/2016

	BHR		Fringe Benefit Payments						Irrevocable Fund		Total PWR	Overtime Rate
			H&W	Pension	App Tr.	Vac.	Annuity	Other	LECET (*)	MISC (*)		
Classification												
Electrical Lineman	$41.49		$5.25	$1.24	$0.41	$0.00	$8.71	$0.00	$0.00	$0.00	$57.10	$77.84
Cable Splicer	$41.49		$5.25	$1.24	$0.41	$0.00	$8.71	$0.00	$0.00	$0.00	$57.10	$77.84
Equip. Operator	$37.34		$5.25	$1.12	$0.37	$0.00	$7.84	$0.00	$0.00	$0.00	$51.92	$70.59
Groundman 0 to 12 months	$24.90		$5.25	$0.75	$0.25	$0.00	$5.23	$0.00	$0.00	$0.00	$36.38	$48.83
Groundman 1 Year or More	$29.05		$5.25	$0.87	$0.29	$0.00	$6.10	$0.00	$0.00	$0.00	$41.56	$56.09
Apprentice Linemen	**Percent**											
1st 1000 Hrs	60.00	$24.89	$5.25	$0.75	$0.25	$0.00	$5.23	$0.00	$0.00	$0.00	$36.37	$48.82
2nd 1000 Hrs	65.00	$26.97	$5.25	$0.81	$0.27	$0.00	$5.66	$0.00	$0.00	$0.00	$38.96	$52.44
3rd 1000 Hrs	70.00	$29.04	$5.25	$0.87	$0.29	$0.00	$6.10	$0.00	$0.00	$0.00	$41.55	$56.07
4th 1000 Hrs	75.00	$31.12	$5.25	$0.93	$0.31	$0.00	$6.54	$0.00	$0.00	$0.00	$44.15	$59.71
5th 1000 Hrs	80.00	$33.19	$5.25	$1.00	$0.33	$0.00	$6.97	$0.00	$0.00	$0.00	$46.74	$63.34
6th 1000 Hrs	85.00	$35.27	$5.25	$1.06	$0.35	$0.00	$7.41	$0.00	$0.00	$0.00	$49.34	$66.97
7th 1000 Hrs	90.00	$37.34	$5.25	$1.12	$0.37	$0.00	$7.84	$0.00	$0.00	$0.00	$51.92	$70.59

Special Calculation Note : No special calculations for this skilled craft wage rate are required at this time.

Ratio :

1 Journeymen to 1 Apprentice

Jurisdiction (* denotes special jurisdictional note) :

ASHTABULA, CUYAHOGA, GEAUGA, LAKE, LORAIN

Special Jurisdictional Note :

Details :

A groundman when directed shall assist a Journeymen in the performance of his/her work on the ground, including the use of hand tools. Under no circumstances shall this classification climb poles, towers, ladders, or work from an elevated platform or bucket truck. This classification shall not perform work normally assigned to an apprentice lineman. There shall be no more than one (1) Groundman for each two (2) Journeyman except when performing DOT Traffic Signal or Highway lighting work where the ratio can be two (2) Groundman for each Journeyman or Operator.

Prevailing Wage Rate
Skilled Crafts

Name of Union: Electrical Local 71 High Tension Pipe Type Cable

Change # : LCN01-2016fbLoc7

Craft : Lineman Effective Date : 03/10/2016 Last Posted : 03/10/2016

	BHR	Fringe Benefit Payments						Irrevocable Fund		Total PWR	Overtime Rate
		H&W	Pension	App Tr.	Vac.	Annuity	Other	LECET (*)	MISC (*)		
Classification											
Electrical Lineman	$40.37	$5.25	$1.21	$0.40	$0.00	$8.88	$0.35	$0.00	$0.00	$56.46	$76.64
Certified Lineman Welder	$40.37	$5.25	$1.21	$0.40	$0.00	$8.88	$0.35	$0.00	$0.00	$56.46	$76.64
Certified Cable Splicer	$40.37	$5.25	$1.21	$0.40	$0.00	$8.88	$0.35	$0.00	$0.00	$56.46	$76.64
Operator A	$36.28	$5.25	$1.09	$0.36	$0.00	$7.98	$0.35	$0.00	$0.00	$51.31	$69.45
Operator B	$32.21	$5.25	$0.97	$0.32	$0.00	$7.09	$0.35	$0.00	$0.00	$46.19	$62.29
Operator C	$26.10	$5.25	$0.78	$0.26	$0.00	$5.74	$0.35	$0.00	$0.00	$38.48	$51.53
Groundman 0-12 months Exp	$20.19	$5.25	$0.61	$0.20	$0.00	$4.44	$0.35	$0.00	$0.00	$31.04	$41.14
Groundman 0-12 months Exp w/CDL	$22.20	$5.25	$0.67	$0.22	$0.00	$4.88	$0.35	$0.00	$0.00	$33.57	$44.67
Groundman 1 yr or more	$22.20	$5.25	$0.67	$0.22	$0.00	$4.88	$0.35	$0.00	$0.00	$33.57	$44.67
Groundman 1 yr or more w/CDL	$26.24	$5.25	$0.79	$0.26	$0.00	$5.77	$0.35	$0.00	$0.00	$38.66	$51.78
Equipment Mechanic A	$32.21	$5.25	$0.97	$0.32	$0.00	$7.09	$0.35	$0.00	$0.00	$46.19	$62.29
Equipment Mechanic B	$29.16	$5.25	$0.87	$0.29	$0.00	$6.42	$0.35	$0.00	$0.00	$42.34	$56.92
	$26.10	$5.25	$0.78	$0.26	$0.00	$5.74	$0.35	$0.00	$0.00	$38.48	$51.53

Equipment Mechanic C												
X-Ray Technician	$40.37		$5.25	$1.21	$0.40	$0.00	$8.88	$0.35	$0.00	$0.00	$56.46	$76.64
Apprentice	**Percent**											
1st 1000 hrs	60.00	$24.22	$5.25	$0.73	$0.24	$0.00	$5.33	$0.35	$0.00	$0.00	$36.12	$48.23
2nd 1000 hrs	65.00	$26.24	$5.25	$0.79	$0.26	$0.00	$5.77	$0.35	$0.00	$0.00	$38.66	$51.78
3rd 1000 hrs	70.00	$28.26	$5.25	$0.85	$0.28	$0.00	$6.22	$0.35	$0.00	$0.00	$41.21	$55.34
4th 1000 hrs	75.00	$30.28	$5.25	$0.91	$0.30	$0.00	$6.66	$0.35	$0.00	$0.00	$43.75	$58.89
5th 1000 hrs	80.00	$32.30	$5.25	$0.97	$0.32	$0.00	$7.11	$0.35	$0.00	$0.00	$46.30	$62.44
6th 1000 hrs	85.00	$34.31	$5.25	$1.03	$0.34	$0.00	$7.55	$0.35	$0.00	$0.00	$48.83	$65.99
7th 1000 hrs	90.00	$36.33	$5.25	$1.09	$0.36	$0.00	$7.99	$0.35	$0.00	$0.00	$51.37	$69.54

Special Calculation Note : Other is Health Retirement Account

Operator "A"
John Henry Rock Drill, D-6 (or equivalent) and above, Trackhoe Digger, (320 Track excavator), Cranes (greater then 25 tons and less than 45 tons).

Operator "B"
Cranes (greater than 6 tons and up to 25 tons), Backhoes, Road Tractor, Dozer up to D-5, Pressure Digger- wheeled or tracked, all Tension wire Stringing equipment.

Operator "C"
Trench, Backhoe, Riding type vibratory Compactor, Ground Rod Driver, Boom Truck (6 ton & below), Skid Steer Loaders, Material Handler.

*All Operators of cranes 45 ton or larger shall be paid the journeyman rate of pay. $0.30 is for Health Retirement Account.

Ratio :

1 Journeyman to 1 Apprentice

Jurisdiction (* denotes special jurisdictional note) :

ADAMS, ASHLAND, ASHTABULA, ATHENS, AUGLAIZE, BELMONT, BROWN, BUTLER, CARROLL, CHAMPAIGN, CLARK, CLERMONT, CLINTON, COLUMBIANA, COSHOCTON, CRAWFORD, CUYAHOGA, DARKE, DELAWARE, FAIRFIELD, FAYETTE, FRANKLIN, GALLIA, GEAUGA, GREENE, GUERNSEY, HAMILTON, HARRISON,

HIGHLAND, HOCKING, HOLMES, JACKSON, JEFFERSON, KNOX, LAKE, LAWRENCE, LICKING, LOGAN, LORAIN, MADISON, MAHONING, MARION, MEDINA, MEIGS, MERCER, MIAMI, MONROE, MONTGOMERY, MORGAN, MORROW, MUSKINGUM, NOBLE, PERRY, PICKAWAY, PIKE, PORTAGE, PREBLE, RICHLAND, ROSS, SCIOTO, SHELBY, STARK, SUMMIT, TRUMBULL, TUSCARAWAS, UNION, VINTON, WARREN, WASHINGTON, WAYNE

Special Jurisdictional Note :

Details :

Heli - Arc Welding will be paid $.30 above Journeyman rate. Additional compensation of 10% over the Journeyman Lineman and Journeyman Technician for performing work on structures outside of buildings such as water towers, smoke stacks, radio and television towers, more than 75' above the ground.

Prevailing Wage Rate
Skilled Crafts

Name of Union: Electrical Local 71 Outside Utility Power

Change # : LCN01-2016fbLoc7

Craft : Lineman Effective Date : 03/10/2016 Last Posted : 03/10/2016

	BHR	Fringe Benefit Payments						Irrevocable Fund		Total PWR	Overtime Rate
		H&W	Pension	App Tr.	Vac.	Annuity	Other	LECET (*)	MISC (*)		
Classification											
Electrical Lineman	$38.29	$5.25	$1.15	$0.38	$0.00	$8.42	$0.35	$0.00	$0.00	$53.84	$72.98
Substation Technician	$38.29	$5.25	$1.15	$0.38	$0.00	$8.42	$0.35	$0.00	$0.00	$53.84	$72.98
Cable Splicer	$40.06	$5.25	$1.20	$0.40	$0.00	$8.81	$0.35	$0.00	$0.00	$56.07	$76.10
Operator A	$34.42	$5.25	$1.03	$0.34	$0.00	$7.57	$0.35	$0.00	$0.00	$48.96	$66.17
Operator B	$30.54	$5.25	$0.92	$0.31	$0.00	$6.72	$0.35	$0.00	$0.00	$44.09	$59.36
Operator C	$24.73	$5.25	$0.74	$0.25	$0.00	$5.44	$0.35	$0.00	$0.00	$36.76	$49.13
Groundman 0-12 months Exp	$19.15	$5.25	$0.57	$0.19	$0.00	$4.21	$0.35	$0.00	$0.00	$29.72	$39.29
Groundman 0-12 months Exp w/CDL	$21.06	$5.25	$0.63	$0.21	$0.00	$4.63	$0.35	$0.00	$0.00	$32.13	$42.66
Groundman 1 yr or more	$21.06	$5.25	$0.63	$0.21	$0.00	$4.63	$0.35	$0.00	$0.00	$32.13	$42.66
Groundman 1 yr or more w/CDL	$24.89	$5.25	$0.75	$0.25	$0.00	$5.48	$0.35	$0.00	$0.00	$36.97	$49.42
Equipment Mechanic A	$30.54	$5.25	$0.92	$0.31	$0.00	$6.72	$0.35	$0.00	$0.00	$44.09	$59.36
Equipment Mechanic B	$27.65	$5.25	$0.83	$0.28	$0.00	$6.08	$0.35	$0.00	$0.00	$40.44	$54.26
Equipment Mechanic C	$24.73	$5.25	$0.74	$0.25	$0.00	$5.44	$0.35	$0.00	$0.00	$36.76	$49.13
	$27.24	$5.25	$0.82	$0.27	$0.00	$5.99	$0.35	$0.00	$0.00	$39.92	$53.54

Line Truck w/uuger												
Apprentice	**Percent**											
1st 1000 hrs	60.00	$22.97	$5.25	$0.69	$0.23	$0.00	$5.05	$0.35	$0.00	$0.00	$34.54	$46.03
2nd 1000 hrs	65.00	$24.89	$5.25	$0.75	$0.25	$0.00	$5.48	$0.35	$0.00	$0.00	$36.97	$49.41
3rd 1000 hrs	70.00	$26.80	$5.25	$0.80	$0.27	$0.00	$5.90	$0.35	$0.00	$0.00	$39.37	$52.77
4th 1000 hrs	75.00	$28.72	$5.25	$0.86	$0.29	$0.00	$6.32	$0.35	$0.00	$0.00	$41.79	$56.15
5th 1000 hrs	80.00	$30.63	$5.25	$0.92	$0.31	$0.00	$6.74	$0.35	$0.00	$0.00	$44.20	$59.52
6th 1000 hrs	85.00	$32.55	$5.25	$0.98	$0.33	$0.00	$7.16	$0.35	$0.00	$0.00	$46.62	$62.89
7th 1000 hrs	90.00	$34.46	$5.25	$1.03	$0.34	$0.00	$7.58	$0.35	$0.00	$0.00	$49.01	$66.24

Special Calculation Note : Other is Health Retirement Account
Operator "A"
John Henry Rock Drill, D-6 (or equivalent) and above, Trackhoe Digger, (320 Track excavator), Cranes (greater then 25 tons and less than 45 tons).

Operator "B"
Cranes (greater than 6 tons and up to 25 tons), Backhoes, Road Tractor, Dozer up to D-5, Pressure Digger- wheeled or tracked, all Tension wire Stringing equipment.

Operator "C"
Trench, Backhoe, Riding type vibratory Compactor, Ground Rod Driver, Boom Truck (6 ton & below), Skid Steer Loaders, Material Handler.

Ratio :

(1) Journeyman Lineman to (1) Apprentice

Jurisdiction (* denotes special jurisdictional note) :

ADAMS, ASHLAND, ASHTABULA, ATHENS, AUGLAIZE, BELMONT, BROWN, BUTLER, CARROLL, CHAMPAIGN, CLARK, CLERMONT, CLINTON, COLUMBIANA, COSHOCTON, CRAWFORD, CUYAHOGA, DARKE, DELAWARE, FAIRFIELD, FAYETTE, FRANKLIN, GALLIA, GEAUGA, GREENE, GUERNSEY, HAMILTON, HARRISON, HIGHLAND, HOCKING, HOLMES, JACKSON, JEFFERSON, KNOX, LAKE, LAWRENCE, LICKING, LOGAN, LORAIN, MADISON, MAHONING, MARION, MEDINA, MEIGS, MERCER, MIAMI, MONROE, MONTGOMERY, MORGAN, MORROW, MUSKINGUM, NOBLE, PERRY, PICKAWAY, PIKE, PORTAGE, PREBLE, RICHLAND, ROSS,

SCIOTO, SHELBY, STARK, SUMMIT,
TRUMBULL, TUSCARAWAS, UNION,
VINTON, WARREN, WASHINGTON, WAYNE

Special Jurisdictional Note : 0.30 is for Health Retirement Account.

Details :
Heli - Arc Welding will be paid $.30 above Journeyman rate. Additional compensation of 10% over the Journeyman Lineman and Journeyman Technician for performing work on structures outside of buildings such as water towers, smoke stacks, radio and television towers, more than 75' above the ground.

Prevailing Wage Rate
Skilled Crafts

Name of Union: Elevator Local 17

Change # : LCN01-2012jcLoc17

Craft : Elevator Effective Date : 05/30/2012 Last Posted : 05/30/2012

	BHR		Fringe Benefit Payments						Irrevocable Fund		Total PWR	Overtime Rate
			H&W	Pension	App Tr.	Vac.	Annuity	Other	LECET (*)	MISC (*)		
Classification												
Elevator Mechanic	$44.04		$11.02	$6.96	$0.55	$2.64	$5.00	$1.43	$0.00	$0.00	$71.64	$93.66
Helper	$30.83		$11.02	$6.96	$0.55	$1.85	$5.00	$0.99	$0.00	$0.00	$57.20	$72.61
0-6months Probation	50.00	$22.02	$0.00	$0.00	$0.00	$0.00	$0.00	$0.00	$0.00	$0.00	$22.02	$33.03
1st year	55.00	$24.22	$11.02	$6.96	$0.55	$1.42	$5.00	$0.78	$0.00	$0.00	$49.95	$62.06
2nd year	65.00	$28.63	$11.02	$6.96	$0.55	$1.67	$5.00	$0.92	$0.00	$0.00	$54.75	$69.06
3rd year	70.00	$30.83	$11.02	$6.96	$0.55	$1.80	$5.00	$0.99	$0.00	$0.00	$57.15	$72.56
4th year and Assistant Mechanic	80.00	$35.23	$11.02	$6.96	$0.55	$2.06	$5.00	$1.14	$0.00	$0.00	$61.96	$79.58

Special Calculation Note : Vacation 6% for employees under 5 years based on regular hourly rate for all hours worked. 8% for employees over 5 years based on regular hourly rate for all hours worked. Other is Holiday Pay

Ratio :

1 Journeyman to 1 Apprentice.

Jurisdiction (* denotes special jurisdictional note) :

ASHTABULA, CUYAHOGA, ERIE, GEAUGA, LAKE, LORAIN

Special Jurisdictional Note :

Details :

Prevailing Wage Rate
Skilled Crafts

Name of Union: Glazier Local 181

Change # : LCN01-2014fbLoc181

Craft : Glazier Effective Date : 05/01/2014 Last Posted : 04/30/2014

	BHR		Fringe Benefit Payments						Irrevocable Fund		Total PWR	Overtime Rate
			H&W	Pension	App Tr.	Vac.	Annuity	Other	LECET (*)	MISC (*)		
Classification												
Glazier	$30.49		$5.57	$8.31	$0.30	$0.00	$0.00	$0.00	$0.00	$0.00	$44.67	$59.92
Apprentice	Percent											
1st 6 months	40.00	$12.20	$5.57	$0.68	$0.30	$0.00	$0.00	$0.00	$0.00	$0.00	$18.75	$24.84
2nd 6 months	45.00	$13.72	$5.57	$0.68	$0.30	$0.00	$0.00	$0.00	$0.00	$0.00	$20.27	$27.13
3rd 6 months	50.00	$15.25	$5.57	$3.76	$0.30	$0.00	$0.00	$0.00	$0.00	$0.00	$24.87	$32.50
4th 6 months	55.00	$16.77	$5.57	$4.06	$0.30	$0.00	$0.00	$0.00	$0.00	$0.00	$26.70	$35.08
5th 6 months	60.00	$18.29	$5.57	$4.37	$0.30	$0.00	$0.00	$0.00	$0.00	$0.00	$28.53	$37.68
6th 6 months	70.00	$21.34	$5.57	$4.99	$0.30	$0.00	$0.00	$0.00	$0.00	$0.00	$32.20	$42.87
7th 6 months	80.00	$24.39	$5.57	$5.60	$0.30	$0.00	$0.00	$0.00	$0.00	$0.00	$35.86	$48.06
8th 6 months	90.00	$27.44	$5.57	$6.22	$0.30	$0.00	$0.00	$0.00	$0.00	$0.00	$39.53	$53.25

Special Calculation Note : No special calculations for this classification.

Ratio :

3 Journeymen to 1 Apprentice

Jurisdiction (* denotes special jurisdictional note) :

ASHTABULA, CUYAHOGA, ERIE*, GEAUGA, HURON*, LAKE, LORAIN, MEDINA*, PORTAGE*, SUMMIT*

Special Jurisdictional Note : Start at the intersection of Route 305 and the eastern boundary line of Portage County.Follow Route 305 west onto Route 82, follow Route 82 west to the intersection of Routes 82,8 and 271, follow Route 271 south to Medina County line west to Route 94, follow Route 94 south to Route 303, follow Route 303 west to Route 252, follow Route 252 south to Route 18, follow Route 18 west to Route 301, follow 301 south to Route 162, follow Route 162 west to Route 58, follow Route 58 south to the Ashland County line, follow the Ashland County line west and then north along the line to Route 18, west onto Route 20, follow Route 20 west to Route 4, follow Route 4 north to Lake Erie. Local 181 has the jurisdiction on all projects built on the property which borders on the above Routes and/or intersections, wherever a County line is the divider between Local 181 and another Union, the jurisdiction is only to the county line.

Details :
High Pay: All work is defined for the purpose of the agreement as being work which requires that the employee be supported by equipment that hangs from or suspends from the wall or roof of a building or structure. This work shall receive and additional $1.25 per hour.

Prevailing Wage Rate
Skilled Crafts

Name of Union: Ironworker Local 17

Change # : LCN01-2016fbLoc17

Craft : Ironworker Effective Date : 06/16/2016 Last Posted : 06/16/2016

	BHR		Fringe Benefit Payments						Irrevocable Fund		Total PWR	Overtime Rate
			H&W	Pension	App Tr.	Vac.	Annuity	Other	LECET (*)	MISC (*)		
Classification												
Ironworker	$31.30		$6.95	$10.00	$0.50	$2.00	$3.10	$0.00	$0.00	$0.00	$53.85	$69.50
Apprentice	Percent											
1st 6 Months	50.00	$15.65	$6.95	$10.00	$0.50	$2.00	$3.10	$0.00	$0.00	$0.00	$38.20	$46.03
2nd 6 Months	55.00	$17.22	$6.95	$10.00	$0.50	$2.00	$3.10	$0.00	$0.00	$0.00	$39.77	$48.37
2nd Year 1st 6 Months	70.00	$21.91	$6.95	$10.00	$0.50	$2.00	$3.10	$0.00	$0.00	$0.00	$44.46	$55.42
2nd Year 2nd 6 Months	75.00	$23.48	$6.95	$10.00	$0.50	$2.00	$3.10	$0.00	$0.00	$0.00	$46.03	$57.76
3rd Year 1st 6 Months	80.00	$25.04	$6.95	$10.00	$0.50	$2.00	$3.10	$0.00	$0.00	$0.00	$47.59	$60.11
3rd Year 2nd 6 Months	85.00	$26.60	$6.95	$10.00	$0.50	$2.00	$3.10	$0.00	$0.00	$0.00	$49.16	$62.46
4th Year 1st 6 Months	90.00	$28.17	$6.95	$10.00	$0.50	$2.00	$3.10	$0.00	$0.00	$0.00	$50.72	$64.81
4th Year 2nd 6 Months	95.00	$29.73	$6.95	$10.00	$0.50	$2.00	$3.10	$0.00	$0.00	$0.00	$52.29	$67.15

Special Calculation Note : No special calculations for this skilled craft wage rate are required at this time.

Ratio :

	Jurisdiction (* denotes special jurisdictional note) :
4 Journeymen to 1 Apprentice on Structural Work 3 Journeymen to 1 Apprentice on Rod Work 2 Journeymen to 1 Apprentice on ALL Finishing, Steel Sash, Stairway and Ornamental Work	ASHTABULA, CUYAHOGA, ERIE, GEAUGA, HURON, LAKE, LORAIN, MEDINA, PORTAGE, SUMMIT

Special Jurisdictional Note : West Boundary Line :Sandusky, Ohio: Boundary lines between Local 17 & Local 55 are as follows: Columbus Ave north to Sandusky Bay (and/or Lake Erie): Columbus Ave South to present Route 4: Route 4 South to present Route 99: from Route 99 south to old Route 224-all territory to the west of the boundary line to be the jurisdiction of Local 55.All territory to the East of the boundary line to be the jurisdiction of Local 17.Kelly's Island to be within jurisdiction of Local 17.All bridges,tunnels,viaducts,etc, relative to these boundary lines shall be the jurisdiction of Local 17
South Boundary Line:Canton, Ohio: Boundary lines between Local 17 & Local 550 are as follows: All territory north of old Route 224 line to be the jurisdiction of Local 17. All bridges,tunnels,viaducts,signs,etc, relative to old Route 224 line to be within the jurisdiction of Local 17. All territory south of old Route 224 line is to be within the jurisdiction of Local 550, except for everything within the city limits of Barberton which shall be the jurisdiction of Local 17.
Reading from West to East: Route old 224 line: Greenwich Ave-Wooster Road or East Ave. Route old 224 line: New 224 line including Cloverleaf: East Waterloo Road: New 224 line-Attwood Road-Old 224. This will be considered to be the old Route 224 line,except for the city limits of Barberton, Ohio which shall be the jurisdiction of Local 17
Southeast Boundary : Between local 17 and Local 207 are as follows: West of a line from Middlefield to Shalersville to Deerfield, shall be under the jurisdiction of local 17. East of a line from Middlefield, to Shalersville to Deerfield, shall be under the jurisdiction of Local 207. Local 17 & Local 207 have agreed that the Ohio County of Ashtabula shall be as follows: Everything North of Route 6, starting at the Geauga County line, proceeding east to State Route 45, shall be under the jurisdiction of Local 17. Everything South, starting at the Geauga County line shall be under local 207.
North Boundary: The East boundary line and the West boundary line continuing North halfway across Lake Erie.

Details :

Prevailing Wage Rate
Skilled Crafts

Name of Union: Labor Local 310

Change # : LCN03-2016fbLabor310

Craft : Laborer Effective Date : 07/06/2016 Last Posted : 07/06/2016

	BHR		Fringe Benefit Payments						Irrevocable Fund		Total PWR	Overtime Rate
			H&W	Pension	App Tr.	Vac.	Annuity	Other	LECET (*)	MISC (*)		
Classification												
Laborer Group 1	$25.44		$5.37	$10.20	$0.10	$0.00	$2.60	$0.45	$0.16	$0.00	$44.32	$57.04
Group 2	$25.96		$5.37	$10.20	$0.10	$0.00	$2.60	$0.45	$0.16	$0.00	$44.84	$57.82
Group 3	$25.69		$5.37	$10.20	$0.10	$0.00	$2.60	$0.45	$0.16	$0.00	$44.57	$57.42
Group 4	$22.31		$5.37	$10.20	$0.10	$0.00	$2.60	$0.45	$0.16	$0.00	$41.19	$52.35
Group 5	$19.84		$5.37	$10.20	$0.10	$0.00	$2.60	$0.45	$0.16	$0.00	$38.72	$48.64
Group 6	$21.99		$5.37	$10.20	$0.10	$0.00	$2.60	$0.45	$0.16	$0.00	$40.87	$51.86
Group 7	$25.94		$5.37	$10.20	$0.10	$0.00	$2.60	$0.45	$0.16	$0.00	$44.82	$57.79
Group 8	$26.09		$5.37	$10.20	$0.10	$0.00	$2.60	$0.45	$0.16	$0.00	$44.97	$58.02
Group 9	$20.29		$5.37	$10.20	$0.10	$0.00	$2.60	$0.45	$0.16	$0.00	$39.17	$49.32
Group 10	$16.29		$5.37	$10.20	$0.10	$0.00	$2.60	$0.45	$0.16	$0.00	$35.17	$43.32
Group 11	$25.59		$5.37	$10.20	$0.10	$0.00	$2.60	$0.45	$0.16	$0.00	$44.47	$57.27
Group 12	$25.83		$5.37	$10.20	$0.10	$0.00	$2.60	$0.45	$0.16	$0.00	$44.71	$57.63
Group 13	$26.94		$5.37	$10.20	$0.10	$0.00	$2.60	$0.45	$0.16	$0.00	$45.82	$59.29
Apprentice	Percent											
1-1000 hours	60.00	$15.26	$5.37	$0.00	$0.10	$0.00	$2.60	$0.45	$0.16	$0.00	$23.94	$31.58
1001-2000 hours	70.00	$17.81	$5.37	$5.10	$0.10	$0.00	$2.60	$0.45	$0.16	$0.00	$31.59	$40.49
2001-3000 hours	80.00	$20.35	$5.37	$10.20	$0.10	$0.00	$2.60	$0.45	$0.16	$0.00	$39.23	$49.41
3001-4000 hours	90.00	$22.90	$5.37	$10.20	$0.10	$0.00	$2.60	$0.45	$0.16	$0.00	$41.78	$53.22
4001 plus	100.00	$25.44	$5.37	$10.20	$0.10	$0.00	$2.60	$0.45	$0.16	$0.00	$44.32	$57.04

Special Calculation Note : Other is a Supplemental Unemployment Benefit (SUB).

Ratio :

3 Journeymen to 1 Apprentice

Jurisdiction (* denotes special jurisdictional note) :

CUYAHOGA, GEAUGA, LAKE

Special Jurisdictional Note :

Details :

Group 1 - Building and construction Laborers and Tenders; Asbestos Removal - hazardous materials; unloading of furniture and fixtures.

Group 2 - Gunite Operating (Machines of all type).

Group 3 - Laborers on swinging scaffolds; air track and wagon drill.

Group 4 - Drywall stocking and handling.

Group 5 - General Landscaping.

Group 6 - Final Clean-up (must perform clean-up duties for entire work shift, and excludes demolition work).

Group 7 - Blasters, Shooters, Caissons, Well Cylinder, Cofferdams, Mine Workers without air, acid brick tenders.

Group 8 - Top man on free standing radial stack; bellman and bottom man in blast furnace and stove.

Group 9 - Sewer jet.

Group 10 - Heat tender.

Group 11 - Firebrick.

Group 12 - Mason tender handling carbon block and bottom block for blast furnace stoves, stacks etc.

Group 13 - Lansing Burners.

Prevailing Wage Rate
Skilled Crafts

Name of Union: Laborer HevHwy 1A

Change # : LCN01-2016fbHevHwy1A

Craft : Laborer Group 1 Effective Date : 05/20/2016 Last Posted : 05/20/2016

	BHR		Fringe Benefit Payments						Irrevocable Fund		Total PWR	Overtime Rate
			H&W	Pension	App Tr.	Vac.	Annuity	Other	LECET (*)	MISC (*)		
Classification												
Laborer Group 1	$30.88		$6.70	$3.20	$0.45	$0.00	$0.00	$0.00	$0.10	$0.00	$41.33	$56.77
Group 2	$31.05		$6.70	$3.20	$0.45	$0.00	$0.00	$0.00	$0.10	$0.00	$41.50	$57.03
Group 3	$31.38		$6.70	$3.20	$0.45	$0.00	$0.00	$0.00	$0.10	$0.00	$41.83	$57.52
Group 4	$31.83		$6.70	$3.20	$0.45	$0.00	$0.00	$0.00	$0.10	$0.00	$42.28	$58.20
Watch Person	$21.95		$6.70	$3.20	$0.45	$0.00	$0.00	$0.00	$0.10	$0.00	$32.40	$43.38
Apprentice	Percent											
0-1000 hrs	60.00	$18.53	$6.70	$3.20	$0.45	$0.00	$0.00	$0.00	$0.10	$0.00	$28.98	$38.24
1001-2000 hrs	70.00	$21.62	$6.70	$3.20	$0.45	$0.00	$0.00	$0.00	$0.10	$0.00	$32.07	$42.87
2001-3000 hrs	80.00	$24.70	$6.70	$3.20	$0.45	$0.00	$0.00	$0.00	$0.10	$0.00	$35.15	$47.51
3001-4000 hrs	90.00	$27.79	$6.70	$3.20	$0.45	$0.00	$0.00	$0.00	$0.10	$0.00	$38.24	$52.14
More than 4000 hrs	100.00	$30.88	$6.70	$3.20	$0.45	$0.00	$0.00	$0.00	$0.10	$0.00	$41.33	$56.77

Special Calculation Note : Watchman have no Apprentices. Tunnel Laborer rate with air-pressurized add $1.00 to the above wage rate.

Ratio :

1 Journeymen to 1 Apprentice
3 Journeymen to 1 Apprentice thereafter

Jurisdiction (* denotes special jurisdictional note) :
LAKE

Special Jurisdictional Note : Hod Carriers and Common Laborers - Heavy, Highway, Sewer, Waterworks, Utility, Airport, Railroad, Industrial and Building Site, Sewer Plant,

Waste Water Treatment Facilities Construction

Details :

Group 1

Laborer (Construction); Plant Laborer or Yardman, Right-of-way Laborer, Landscape Laborer, Highway Lighting Worker, Signalization Worker, (Swimming) Pool Construction Laborer, Utility Man, *Bridge Man, Handyman, Joint Setter, Flagperson, Carpenter Helper, Waterproofing Laborer, Slurry Seal, Seal Coating, Surface Treatment or Road Mix Laborer, Riprap Laborer & Grouter, Asphalt Laborer, Dump Man (batch trucks), Guardrail & Fence Installer, Mesh Handler & Placer, Concrete Curing Applicator, Scaffold Erector, Sign Installer, Hazardous Waste (level D), Diver Helper, Zone Person and Traffic Control.

*Bridge Man will perfomr work as per the October 31, 1949, memorandum on concrete forms, byand between the United Brotherhood of Caprpenters and Joiners of Americ and the Laborers' International Union of North America, which states in; "the moving, cleaning, oiling and carrying to the next point of erection, and the stripping of forms which are not to be re-used, and forms on all flat arch work shall be done by memebers of the Laborers' International Union of North America."

Group 2

Asphalt Raker, Screwman or Paver, Concrete Puddler, Kettle Man (pipeline), All Machine-Driven Tools (Gas, Electric, Air), Mason Tender, Brick Paver, Mortar Mixer, Skid Steer, Sheeting & Shoring Person, Surface Grinder Person, Screedperson, Water Blast, Hand Held Wand, Power Buggy or Power Wheelbarrow, Paint Striper, Plastic fusing Machine Operator, Rodding Machine Operator, Pug Mill Operator, Operator of All Vacuum Devices Wet or Dry, Handling of all Pumps 4 inches and under (gas, air or electric), Diver, Form Setter, Bottom Person, Welder Helper (pipeline), Concrete Saw Person, Cutting with Burning Torch, Pipe Layer, Hand Spiker (railroad), Underground Person (working in sewer and waterline, cleaning, repairing and reconditioning). Tunnel Laborer (without air),Caisson, Cofferdam (below 25 feet deep), Air Track and Wagon Drill, Sandblaster Nozzle Person, Hazardous Waste (level B), ***Lead Abatement, Hazardous Waste (level C)

***Includes the erecting of structures for the removal, including the encapsulation and containment of Lead abatement process.

Group 3

Blast and Powder Person, Muckers will be defined as shovel men working directly with the miners, Wrencher (mechanical joints & utility pipeline), Yarner, Top Lander, Hazardous Waste (level A), Concrete Specialist, Curb Setter and Cutter, Grade Checker, Concrete Crew in Tunnels. Utility pipeline Tappers, Waterline, Caulker, Signal Person will receive the rate equal to the rate paid the Laborer classification for which the Laborer is signaling.

Group 4

Miner,Welder, Gunite Nozzle Person

A.) The Watchperson shall be responsible to patrol and maintain a safe traffic zone including but not limited to barrels, cones, signs, arrow boards, message boards etc.
The responsibility of a watchperson is to see that the equipment, job and office trailer etc. are secure.

Prevailing Wage Rate
Skilled Crafts

Name of Union: Operating Engineers - Building Local 18 - Zone I (B)

Change # : LCN01-2016fbLoc18

Craft : Operating Engineer Effective Date : 06/01/2016 Last Posted : 06/01/2016

	BHR		Fringe Benefit Payments						Irrevocable Fund		Total PWR	Overtime Rate
			H&W	Pension	App Tr.	Vac.	Annuity	Other	LECET (*)	MISC (*)		
Classification												
Operator Class 1	$37.61		$7.66	$6.00	$0.75	$0.00	$0.00	$0.09	$0.00	$0.00	$52.11	$70.92
Class 2	$37.46		$7.66	$6.00	$0.75	$0.00	$0.00	$0.09	$0.00	$0.00	$51.96	$70.69
Class 3	$36.01		$7.66	$6.00	$0.75	$0.00	$0.00	$0.09	$0.00	$0.00	$50.51	$68.51
Class 4	$35.23		$7.66	$6.00	$0.75	$0.00	$0.00	$0.09	$0.00	$0.00	$49.73	$67.34
Class 5	$34.91		$7.66	$6.00	$0.75	$0.00	$0.00	$0.09	$0.00	$0.00	$49.41	$66.86
Class 6	$27.83		$7.66	$6.00	$0.75	$0.00	$0.00	$0.09	$0.00	$0.00	$42.33	$56.25
Class 7	$38.61		$7.66	$6.00	$0.75	$0.00	$0.00	$0.09	$0.00	$0.00	$53.11	$72.42
Class 8	$38.36		$7.66	$6.00	$0.75	$0.00	$0.00	$0.09	$0.00	$0.00	$52.86	$72.04
Class 9	$38.61		$7.66	$6.00	$0.75	$0.00	$0.00	$0.09	$0.00	$0.00	$53.11	$72.42
Apprentice	Percent											
1st Year	59.78	$22.48	$7.66	$6.00	$0.75	$0.00	$0.00	$0.09	$0.00	$0.00	$36.98	$48.22
2nd Year	69.72	$26.22	$7.66	$6.00	$0.75	$0.00	$0.00	$0.09	$0.00	$0.00	$40.72	$53.83
3rd Year	79.68	$29.97	$7.66	$6.00	$0.75	$0.00	$0.00	$0.09	$0.00	$0.00	$44.47	$59.45
4th Year	89.63	$33.71	$7.66	$6.00	$0.75	$0.00	$0.00	$0.09	$0.00	$0.00	$48.21	$65.06

Special Calculation Note : Other: Education & Safety Fund is $0.09 per hour.

Ratio :

For every (3) Operating Engineer Journeymen employed by the company ,there may be employed (1) Registered Apprentice. An apprentice, while employed as part of a crew per Article VIII, paragraph77, will not be subject to the apprenticeship ratios in this collective bargaining agreement.

Jurisdiction (* denotes special jurisdictional note) :

ASHTABULA, CUYAHOGA, ERIE, GEAUGA, HURON, LAKE, LORAIN, MEDINA

Special Jurisdictional Note :

Details :

Note: There will be a 10% increase for the apprentices on top of the percentages listed above provided they are operating mobile equipment. Mechanic Trainees will receive 10% increase if required to have CDL

Class 1 - " Boiler Operators, Compressor Operators, Hydraulic Pumps & Power Pacs when mounted on a crane or regardless of where said equipment is mounted (piggy-back operator)" Boom Trucks (all types); Cableways Cherry Pickers; Combination - Concrete Mixers & Towers; Concrete Pumps; Cranes (all types) Derricks (all types); Draglines Dredges (dipper, clam or suction) 3-man crew; Elevating Graders or Euclid Loaders; Floating Equipment; Gradalls; Helicopter Operators; hoisting building materials; Helicopter Winch Operators, Hoisting building materials; Hoes (All types) Hoists (with two or more drums in use): Lift Slab or Panel Jack Operators; Locomotives (all types); Maintenance Engineers (Mechanic and/or Welder); Mixers, paving (multiple drum); Mobile Concrete Pumps, with booms, Panelboards, (all types on site); Pile Drivers; Power Shovels; Rotary Drills (all), used on caissons work, wells (all types), Geothermal work and sub-structure work; Side Booms; Slip Form Pavers; Straddle Carriers (Building Construction on site); Tug Boats. Rough Terrain Fork-lift with Winch/Hoist (when used as a crane), Compact Cranes (all types), track or rubber over 4,000 pound capacity,self-erecting cranes:stationary,track or truck (all configurations) bucket trench machines (over 24 " wide). A Frames, Robotics Equipment Operator/Mechanic. "Boiler Operators, Compressor Operators, Hydraulic Pumps & Power Pacs when mounted on a crane or regardless of where said equipment is mounted (piggy-back operator)"

Class 2 - Asphalt Pavers; Bulldozers; CMI type Equipment;; Endloaders; Kolman-type Loaders (Dirt Loading); Lead Greasemen; Mucking Machines; Power Graders; Power Scoops; Power Scrapers; Push Cats; Vermeer Type Concrete Saw, All rotomills. Horizontal Directional Drill Locator, Horizontal Directional Drill Operator, Instrument Man.

Class 3 - Air Compressors, Pressurizing Shafts or Tunnels; All Asphalt Rollers; Power Boilers (over 15 lbs pressure); Fork Lifts ; Hoists (with one drum); House Elevators (except those automatic call button controlled); Man Lifts; Mud Jacks; Pressure Grouting; Pump Operators (installing or operating Well Points or other types of Dewatering Systems); Trenchers (24" and under); Utility Operators. Laser Screeds and like equipment, Hydro Excavator (all types C rate) (F rate if a second person is needed) Helper rate, Portable Hydraulic Gantry (lift system C Rate) (F rate if a second person is needed.

Class 4 - Compressors, on building construction; Conveyors, used for handling building materials; Mixers, one bag capacity (side loader); Mixers, capacity more than one bag; Generators: Gunite Machines; Pavement Breakers (hydraulic or cable); Post Drivers; Post Hole Diggers; Road Widening Trenchers; Rollers; Welder Operators.

Class 5 - Backfillers and Tampers, Batch Plants, Bar and Joint Installing Machines, Bull Floats, Burlap and Curing Machines, Cleaning Machine Operator (decontamination included) Clefplanes, Concrete Spreading Machines, Crushers, Deckhands, Drum Fireman (asphalt), Farm-type, Tractor, pulling attachments, Finishing Machines, Forklifts (masonry work only) Form Trenchers, High Pressure Pumps (over 1/2" discharge) Hydro Seeders, Pumps (4" and over discharge), provided it is not part of a de-watering stystem discharged into a common header, Self-Propelled Power Spreaders,

Self-Propelled Sub Graders, Submersible Pump (4" and over discharge), provided it is not part of a dewatering system discharged into a common header, Tire Repairman Tractors, pulling sheepfoot rollers or graders, Vibratory Compactors with integral power.

Class 6 - Power Boilers (less than 15 lbs. pressure); Inboard/outboard Motor Boat Launches; Light Plant Operators; Power Driven Heaters (oil fired); Power Scrubbers; Power Sweepers; Pumps (under 4 inch discharge); Signalmen, Submersible Pumps (under 4 inch discharge). and Allen Screed Concrete Paver, Fueling & greasing (plus $3.00), compact cranes: track or rubber under 4,000 pounds. Vac Alls, Apprentice/Helpers, Oiler, Barrier Moving Machines (additinal duty, paid same rate) Bobcat-type and/or Skid Steer Loader with any and all attachments, Geodimeter, Grade Checker Grinders (all), Planners (all types), Saw (concrete vermeer type). Rob Man. Backfillers and Tampers, Batch Plants, Bar and Joint Installing Machines, Bull Floats, Burlap and Curing Machines, Cleaning Machine Operator (decontamination included) Clefplanes, Concrete Spreading Machines, Crushers, Deckhands, Drum Fireman (asphalt), Farm-type Tractor, pulling attachments, Finishing Machines, Forklifts, (masonry work only) Form Trenchers, High Pressure Pumps (over 1/2" discharge) Hydro Seeders, Pumps (4" and over discharge), provided it is not part of a de-watering system discharged into a common header, Self-Propellled Power Spreaders, Self-Propelled Sub-Graders, Submersible Pumps (4" and over discharge), provided it is not part of a dewatering system discharged into a common header, Tire Repairmen Tractors, pulling sheepfoot rollers or graders, Vibratory Compactors with integral power.

Class 7 - Master Mechinic

Class 8 - Boom & Jib 150' - 180 feet and over

Class 9 - Boom & Jib 200' and over

Prevailing Wage Rate
Skilled Crafts

Name of Union: Operating Engineers - HevHwy I

Change # : LCN01-2016fbLoc18hevhwyI

Craft : Operating Engineer Effective Date : 06/01/2016 Last Posted : 06/01/2016

	BHR		Fringe Benefit Payments						Irrevocable Fund		Total PWR	Overtime Rate
			H&W	Pension	App Tr.	Vac.	Annuity	Other	LECET (*)	MISC (*)		
Classification												
Operator Class 1	$35.33		$7.66	$6.00	$0.75	$0.00	$0.00	$0.09	$0.00	$0.00	$49.83	$67.50
Class 2	$35.23		$7.66	$6.00	$0.75	$0.00	$0.00	$0.09	$0.00	$0.00	$49.73	$67.34
Class 3	$34.19		$7.66	$6.00	$0.75	$0.00	$0.00	$0.09	$0.00	$0.00	$48.69	$65.78
Class 4	$32.97		$7.66	$6.00	$0.75	$0.00	$0.00	$0.09	$0.00	$0.00	$47.47	$63.96
Class 5	$27.68		$7.66	$6.00	$0.75	$0.00	$0.00	$0.09	$0.00	$0.00	$42.18	$56.02
Class 6	$35.58		$7.66	$6.00	$0.75	$0.00	$0.00	$0.09	$0.00	$0.00	$50.08	$67.87
Class 7	$35.58		$7.66	$6.00	$0.75	$0.00	$0.00	$0.09	$0.00	$0.00	$50.08	$67.87
Class 8	$35.83		$7.66	$6.00	$0.75	$0.00	$0.00	$0.09	$0.00	$0.00	$50.33	$68.25
Great Lakes Floating Agreement												
Class 1	$41.90		$7.41	$6.00	$0.75	$0.00	$0.00	$0.09	$0.00	$0.00	$56.15	$77.10
Class 2A	$40.40		$7.41	$6.00	$0.75	$0.00	$0.00	$0.09	$0.00	$0.00	$54.65	$74.85
Class 2B	$40.40		$7.41	$6.00	$0.75	$0.00	$0.00	$0.09	$0.00	$0.00	$54.65	$74.85
Class 3	$35.95		$7.41	$6.00	$0.75	$0.00	$0.00	$0.09	$0.00	$0.00	$50.20	$68.18
Class 4	$29.90		$7.41	$6.00	$0.75	$0.00	$0.00	$0.09	$0.00	$0.00	$44.15	$59.10
Apprentice	Percent											
1st Year	50.02	$17.67	$7.66	$6.00	$0.75	$0.00	$0.00	$0.09	$0.00	$0.00	$32.17	$41.01
2nd Year	60.00	$21.20	$7.66	$6.00	$0.75	$0.00	$0.00	$0.09	$0.00	$0.00	$35.70	$46.30
3rd Year	70.00	$24.73	$7.66	$6.00	$0.75	$0.00	$0.00	$0.09	$0.00	$0.00	$39.23	$51.60
4th Year	80.00	$28.26	$7.66	$6.00	$0.75	$0.00	$0.00	$0.09	$0.00	$0.00	$42.76	$56.90
Field Mech Trainee												
1st year	49.88	$17.62	$7.66	$6.00	$0.75	$0.00	$0.00	$0.09	$0.00	$0.00	$32.12	$40.93
2nd year	59.83	$21.14	$7.66	$6.00	$0.75	$0.00	$0.00	$0.09	$0.00	$0.00	$35.64	$46.21
3rd year	69.80	$24.66	$7.66	$6.00	$0.75	$0.00	$0.00	$0.09	$0.00	$0.00	$39.16	$51.49
4th year	79.75	$28.18	$7.66	$6.00	$0.75	$0.00	$0.00	$0.09	$0.00	$0.00	$42.68	$56.76

Special Calculation Note : Other: Education & Safety Fund is $0.09 per hour.

Ratio :

For every (3) Operating Engineer Journeymen employed by the company , there may be employed (1) Registered Apprentice. An apprentice, while employed as part of a crew per Article VIII paragraph 65, will not be subject the apprenticeship ratios in this collective bargaining agreement. On jobs where maintenance engineers are to be employed, for every (2) Class 2 Mechanics there may be (1) Mechanic Trainee & so fourth. Mechanic Trainee rate is a percentage of Class 2 rate.

Jurisdiction (* denotes special jurisdictional note) :
ASHTABULA, CUYAHOGA, ERIE, GEAUGA, LAKE, LORAIN, MEDINA, PORTAGE, SUMMIT

Special Jurisdictional Note :

Details :
**Apprentices will receive a 10% increase on top of the percentages listed above provided they are operating mobile equipment. Mechanic Trainees will receive 10% if required to have a CDL.

Class 1 - Air Compressors on Steel Erection; Asphalt Plant Engineers (Cleveland District Only); Barrier Moving Machine; Boiler Operators, Compressor Operators, or Generators, when mounted on a rig: Boom Trucks (all types); Cableways; Cherry Pickers; Combination- Concrete mixers & Towers; Concrete Pumps; Concrete Plants (over 4 yd capacity); Cranes (all types); Derricks (all types); Draglines; Elevating Graders or Euclid Loaders; Gradalls; Helicopter Crew (Operator- hoist or winch); Hoes (all types); Hoisting Engines; Hoisting Engines, on shaft or tunnel work; Hydraulic Gantry (lifting system); Locomotives (standard guage); Maintenance Operators (class A); Mixers, paving (single or double drum); Piledriving Machines (all types); Power Shovels, Prentice Loader; Quad 9 (double pusher); Rail Tamper (with automatic lifting and aligning device); Refrigerating Machines (freezer operation); Rotary Drills, on caisson work; Side Booms; Slip Form Pavers; Tower Dericks; Trench Machines; Truck Mounted Concrete Pumps; Tug Boats; Tunnel Machines and /or Mining Machines; Wheel Excavators;Industrial-type tractors; Jet Engine - Dryer (D8 or D9) Diesel Tractors Mucking Machines; Multiple Scrapers; Tree Shreddes. Rough Terrain Fork-lift with Winch/Hoist; Compact Cranes,track or rubber over 4,000 pound capacity, self-erecting cranes:stationary,track or truck (all configurations) bucket trench machines (over 24 inches wide).

Class 2 - Asphalt Pavers; Automatic Subgrade Machines, self-propelled (CMI-type); Bobcat-type and /or skid steer loader with hoe attachment greater than 7000 lbs.; Boring Machine Operators (more than 48 inches); Bulldozers; ;Endloaders; Hydro Milling Machine; Kolman-type Loaders (production type-dirt); Lead Greasemen; Maintenance Operators, Class B (Portage and Summit Counties only); Pettibone-Rail Equipment; Power Graders; Power Scrapers; Push Cats; Lighting and Traffic Signal Installation Equipment includes all groups or classifications; Trench Machines (24inch wide and under); Vermeer Type Concrete saw. Material Transfer Equipment (Shuttle buggy) Asphalt All rotomills, grinders and planers of all types. Horizontal Directional Drill (Over 50,000 ft.lbs.thrust and over).

Class 3 - A-Frames; Air Compressors, on tunnel work (low Pressure); All Asphalt Rollers; Asphalt

Plant Engineers (Portage and Summit Counties only); Bobcat-type and/or skid steer loader with or without attachments; Power Boilers (15 lbs pressure and over); Highway Drills (all types); Pump Operators (installing or operating well Points); Pumps (4 inch and over discharge); Railroad Tie Inserter/Remover; Rotovator (lime-soil Stabilzer); Switch & Tie Tampers (without lifting and aligning device); Locomotives (narrow gage); Mixers, concrete (more than one bag capacity); Mixers, one bag capacity (side loader); Utilities Operators, (small equipment); Welding Machines and Generators; Material hoist/elevators. Articulating/straight bed end dumps if assigned (minus $4.00 per hour)

Class 4 - Ballast Re-loacator; Backfillers and Tampers; Batch Plant Operators; Bar and Joint Installing Machines; Boring Machine Operators (48 inch or less); Bull Floats; Burlap and Curing Machines; Concrete Plants (capacity 4 yd and under); Conveyors (highway); Concrete Saws (multiple); Crushers; Deckhands; Farm type tractors, with attachments (highway); Finishing Machines; Hydro Hammers; Hydro Seeders; Pavement Breakers (hydraulic or cable); Plant Mixers; Post Drivers; Post Hole Diggers; Power Brush Burners; Power Form Handling Equipment; Firemen, Floating Equipment (all types); Fork Lifts (highway), except masonry; Form Trenchers; Road Widening Trenchers; Rollers (brick, grade, macadam); Self-Propelled Power Spreaders; Self-Propelled Sub-Graders; Tractors, pulling sheepsfoot rollers or graders; Steam Firemen; Vibratory Compactors, with integral power.

Class 5 - Compressors (portable, Sewer, Heavy and Highway); Generators; Inboard-Outboard Motor Boat Launches; Masonry Fork Lifts; Oilers/Helpers; Power Driven Heaters (oil fired); Power Scrubbers; Power Sweepers; Pumps (under 4 inch discharge); Signalmen; Drum Fireman (in Asphalt Plant); Oil Heaters (Asphalt Plant); Tire Repairmen; VAC/ALLS; Fueling and greasing (plus $3.00), compact cranes; track or rubber under 4,000 pounds.

Class 6 - Master Mechanic

Class 7 - Crane Boom 150ft.- 180ft

Class 8 - Crane Boom over 180 ft.

GREAT LAKES FLOATING AGREEMENT
Class 1 -Diver,Wet Tender,Engineer,(hyd.Dredge), Craft Foreman (Master Mechanic)
Class 2A - Crane Backhoe Operator,Mechanic/Welder,Assistant Engineer (Hyd. Dredge), Leverman (Hyd Dredge) Diver Tender, Tug Operator (Tug 70T and over)
Class 2B - Friction Crane, Lattice Boom, any Crane Certification
Class 3-Maintenance of Crane (over 50T capacity) or Backhoe (115,000 lbs or more) Loader/Dozer and like equipment on Barge, Breakwater Wall, Slip/Dock Scow.
Class 4 - Deck Equipment Operator, (Machineryman/Fireman)(4 equipment Units or more), Deck Hand, Deck Tug Engineer, Crane Maintenance, 50T and under/Backhoe 115,000lbs or less, Assistant Tug Operator, Off Road Truck,

Prevailing Wage Rate
Skilled Crafts

Name of Union: Painter Local 505

Change # : LCN01-2014fbLoc505

Craft : Drywall Finisher Effective Date : 05/01/2014 Last Posted : 04/30/2014

	BHR		Fringe Benefit Payments						Irrevocable Fund		Total PWR	Overtime Rate
			H&W	Pension	App Tr.	Vac.	Annuity	Other	LECET (*)	MISC (*)		
Classification												
Painter Drywall Finisher	$29.49		$5.57	$4.10	$0.35	$0.00	$2.50	$0.00	$0.00	$0.00	$42.01	$56.76
Apprentice	**Percent**											
1st 6 months	45.00	$13.27	$5.57	$0.95	$0.35	$0.00	$0.00	$0.00	$0.00	$0.00	$20.14	$26.78
2nd 6 months	50.00	$14.75	$5.57	$0.95	$0.35	$0.00	$0.00	$0.00	$0.00	$0.00	$21.61	$28.99
3rd 6 months	55.00	$16.22	$5.57	$1.30	$0.35	$0.00	$1.38	$0.00	$0.00	$0.00	$24.82	$32.93
4th 6 months	60.00	$17.69	$5.57	$1.30	$0.35	$0.00	$1.50	$0.00	$0.00	$0.00	$26.41	$35.26
5th 6 months	65.00	$19.17	$5.57	$1.65	$0.35	$0.00	$1.63	$0.00	$0.00	$0.00	$28.37	$37.95
6th 6 months	70.00	$20.64	$5.57	$1.65	$0.35	$0.00	$1.75	$0.00	$0.00	$0.00	$29.96	$40.28
7th & 8th 6 months	80.00	$23.59	$5.57	$2.30	$0.35	$0.00	$2.00	$0.00	$0.00	$0.00	$33.81	$45.61

Special Calculation Note : No special calculation for this classification.

Ratio :

1 Apprentice to 1 Journeyman

Jurisdiction (* denotes special jurisdictional note) :

ASHTABULA, CUYAHOGA, GEAUGA, LAKE, LORAIN, PORTAGE*, SUMMIT*

Special Jurisdictional Note : Portage & Summit North of the East-West Turnpike.

Details :

Prevailing Wage Rate
Skilled Crafts

Name of Union: Painter Local 639

Change # : LCNO1-2015fbLoc639

Craft : Painter Effective Date : 06/10/2015 Last Posted : 06/10/2015

	BHR	Fringe Benefit Payments						Irrevocable Fund		Total PWR	Overtime Rate
		H&W	Pension	App Tr.	Vac.	Annuity	Other	LECET (*)	MISC (*)		
Classification											
Painter Metal Polisher											
Top Helper Class A	$19.09	$3.65	$0.00	$0.00	$0.66	$0.00	$0.00	$0.00	$0.00	$23.40	$32.94
Top Helper Class B	$19.09	$3.65	$0.65	$0.00	$1.03	$0.00	$0.37	$0.00	$0.00	$24.79	$34.33
Top Helper Class C	$19.09	$3.65	$1.00	$0.00	$1.76	$0.00	$0.37	$0.00	$0.00	$25.87	$35.41
Helper Class A	$14.69	$3.65	$0.00	$0.00	$0.51	$0.00	$0.00	$0.00	$0.00	$18.85	$26.19
Helper Class B	$14.69	$3.65	$0.65	$0.00	$0.79	$0.00	$0.28	$0.00	$0.00	$20.06	$27.40
Helper Class C	$14.69	$3.65	$1.00	$0.00	$1.64	$0.00	$0.28	$0.00	$0.00	$21.26	$28.60
New Hire 90 Days	$11.00	$3.65	$0.00	$0.00	$0.00	$0.00	$0.00	$0.00	$0.00	$14.65	$20.15

Special Calculation Note : Other is Sick and Personal Time

Ratio :

Jurisdiction (* denotes special jurisdictional note) :
ADAMS, ALLEN, ASHLAND, ASHTABULA, ATHENS, AUGLAIZE, BELMONT, BROWN, BUTLER, CARROLL, CHAMPAIGN, CLARK,

CLERMONT, CLINTON, COLUMBIANA, COSHOCTON, CRAWFORD, CUYAHOGA, DARKE, DEFIANCE, DELAWARE, ERIE, FAIRFIELD, FAYETTE, FRANKLIN, FULTON, GALLIA, GEAUGA, GREENE, GUERNSEY, HAMILTON, HANCOCK, HARDIN, HARRISON, HENRY, HIGHLAND, HOCKING, HOLMES, HURON, JACKSON, JEFFERSON, KNOX, LAKE, LAWRENCE, LICKING, LOGAN, LORAIN, LUCAS, MADISON, MAHONING, MARION, MEDINA, MEIGS, MERCER, MIAMI, MONROE, MONTGOMERY, MORGAN, MORROW, MUSKINGUM, NOBLE, OTTAWA, PAULDING, PERRY, PICKAWAY, PIKE, PORTAGE, PREBLE, PUTNAM, RICHLAND, ROSS, SANDUSKY, SCIOTO, SENECA, SHELBY, STARK, SUMMIT, TRUMBULL, TUSCARAWAS, UNION, VAN WERT, VINTON, WARREN, WASHINGTON, WAYNE, WILLIAMS, WOOD, WYANDOT

Special Jurisdictional Note :

Details :

Top Helper: Shall perform the responsibilities of a Helper and be responsible for the setup, break down, safety and quality of the company's product.
Helper : Shall be responsible for performing tasks in refinishing, compliance with safety procedures, setting up and breaking down job sites, scaffolding and swing stages and preparing surfaces for refinishing including but not limited to, masking and stripping and cleaning, oxidizing, polishing and scratch removal on various surfaces

Class A Workers: Less than 1 Year of Service.
Class B Workers: More than 1 and less than 8 Years of Service.
Class C Workers: More than 8 Years of Service.

Metal Polisher Scope of Work: Polishing, buffing, stripping, coloring, lacquering, spraying, cleaning and maintenance of ornamental and architectural metals, iron, bronze, nickel, aluminum and stainless steel and in mental specialty work, various stone finishes, stone specialty work and any other work pertaining to the finishing of metal, stones, woods, and any window washing/cleaning done in conjunction with this work, using chemicals, solvents, coatings and hand applied lacquer thinner, removing scratches from mirrow finished metals, burnishing of bronze, statuary finishes on exterior and interior surfaces and the use of all tools required to perform such work, including but not limited to polishes, spray equipment and scaffolding.

Swing State Rate: All work on scaffold 4 sections or higher, including any boom lifts and swing stage scaffolds including the rigging and derigging of hanging/suspended swing stage systems and rappelling/bolson chair work, ADD $1.50 per hour.

Prevailing Wage Rate
Skilled Crafts

Name of Union: Painter Local 639 Zone 1 Sign

Change # : LCN01-2016fbLoc639

Craft : Painter Effective Date : 08/03/2016 Last Posted : 08/03/2016

	BHR		Fringe Benefit Payments						Irrevocable Fund		Total PWR	Overtime Rate
			H&W	Pension	App Tr.	Vac.	Annuity	Other	LECET (*)	MISC (*)		
Classification												
Painter Sign Erector Service/Patteren/Metal Fab/Neon Class A	$22.02		$5.81	$4.75	$0.25	$0.42	$0.00	$0.59	$0.00	$0.00	$33.84	$44.85
Painter Sign Erector/Service/Patteren/Metal Fab/Neon Class B	$22.02		$5.81	$4.75	$0.25	$0.85	$0.00	$0.59	$0.00	$0.00	$34.27	$45.28
Painter Sign Erector/Service/Patteren/Metal Fab/Neon Class C	$22.02		$5.81	$4.75	$0.25	$1.27	$0.00	$0.59	$0.00	$0.00	$34.69	$45.70
Painter Sign Erector/Service/Patteren/Metal Fab/Neon Class D	$22.02		$5.81	$4.75	$0.25	$1.69	$0.00	$0.59	$0.00	$0.00	$35.11	$46.12
Computer Operator, Router, Spray Painter/Wood Class A	$20.58		$5.81	$4.75	$0.25	$0.40	$0.00	$0.55	$0.00	$0.00	$32.34	$42.63
Computer Operator, Router, Spray Painter/Wood Class B	$20.58		$5.81	$4.75	$0.25	$0.79	$0.00	$0.55	$0.00	$0.00	$32.73	$43.02
Computer Operator, Router, Spray Painter/Wood Class C	$20.58		$5.81	$4.75	$0.25	$1.19	$0.00	$0.55	$0.00	$0.00	$33.13	$43.42
Computer Operator, Router, Spray Painter/Wood Class D	$20.58		$5.81	$4.75	$0.25	$1.58	$0.00	$0.55	$0.00	$0.00	$33.52	$43.81
Final Assembly,Helper Class A	$16.33		$5.81	$4.75	$0.25	$0.31	$0.00	$0.44	$0.00	$0.00	$27.89	$36.05
Final Assembly,Helper Class B	$16.33		$5.81	$4.75	$0.25	$0.63	$0.00	$0.44	$0.00	$0.00	$28.21	$36.37
Final Assembly,Helper Class C	$16.33		$5.81	$4.75	$0.25	$0.94	$0.00	$0.44	$0.00	$0.00	$28.52	$36.68
Final Assembly,Helper Class D	$16.33		$5.81	$4.75	$0.25	$1.26	$0.00	$0.44	$0.00	$0.00	$28.84	$37.00
Apprentice	**Percent**											
1-2000 hrs	50.00	$11.01	$5.81	$4.75	$0.25	$0.00	$0.00	$0.30	$0.00	$0.00	$22.12	$27.62
2001-3000 hrs	55.00	$12.11	$5.81	$4.75	$0.25	$0.23	$0.00	$0.33	$0.00	$0.00	$23.48	$29.54
3001-4000 hrs	60.00	$13.21	$5.81	$4.75	$0.25	$0.25	$0.00	$0.36	$0.00	$0.00	$24.63	$31.24
4001-5000 hrs	65.00	$14.31	$5.81	$4.75	$0.25	$0.28	$0.00	$0.39	$0.00	$0.00	$25.79	$32.95
5001-6000 hrs	70.00	$15.41	$5.81	$4.75	$0.25	$0.59	$0.00	$0.41	$0.00	$0.00	$27.22	$34.93
6001-7000 hrs	85.00	$18.72	$5.81	$4.75	$0.25	$0.72	$0.00	$0.50	$0.00	$0.00	$30.75	$40.11

7001-8000 hrs	90.00	$19.82	$5.81	$4.75	$0.25	$0.76	$0.00	$0.53	$0.00	$0.00	$31.92	$41.83

Special Calculation Note : Other is for paid holidays. Apprentice Pay Rate should be based on proper Classification.

Ratio :

Jurisdiction (* denotes special jurisdictional note) :
ASHLAND, ASHTABULA, CUYAHOGA, GEAUGA, LAKE, MEDINA, PORTAGE, RICHLAND, SUMMIT

Special Jurisdictional Note :

Details :
Class A Worker: More than 1 year but less that 2 years.
Class B Worker: More than 2 years but less than 10 years.
Class C Worker: More than 10 years but less that 20 years.
Class D Worker: More than 20 years

Prevailing Wage Rate
Skilled Crafts

Name of Union: Painter Local 707

Change # : LCN01-2016fbLoc707

Craft : Painter Effective Date : 06/24/2016 Last Posted : 06/24/2016

	BHR		Fringe Benefit Payments						Irrevocable Fund		Total PWR	Overtime Rate
			H&W	Pension	App Tr.	Vac.	Annuity	Other	LECET (*)	MISC (*)		
Classification												
Painter Brush Roll	$27.77		$5.81	$4.05	$0.40	$0.00	$3.95	$0.00	$0.00	$0.00	$41.98	$55.87
Paperhanger	$27.77		$5.81	$4.05	$0.40	$0.00	$3.95	$0.00	$0.00	$0.00	$41.98	$55.87
Sandblasting & Buffing	$28.17		$5.81	$4.05	$0.40	$0.00	$3.95	$0.00	$0.00	$0.00	$42.38	$56.47
Spray Painting	$28.47		$5.81	$4.05	$0.40	$0.00	$3.95	$0.00	$0.00	$0.00	$42.68	$56.92
REPAINT Brush Roll & Paperhanger	$26.27		$5.81	$4.05	$0.40	$0.00	$3.95	$0.00	$0.00	$0.00	$40.48	$53.62
REPAINT Sandblasting & Buffing	$26.67		$5.81	$4.05	$0.40	$0.00	$3.95	$0.00	$0.00	$0.00	$40.88	$54.22
REPAINT Spray Painting	$26.97		$5.81	$4.05	$0.40	$0.00	$3.95	$0.00	$0.00	$0.00	$41.18	$54.67
Apprentice - Painter	**Percent**											
1st 6 months	45.00	$12.50	$5.81	$1.05	$0.40	$0.00	$0.00	$0.00	$0.00	$0.00	$19.76	$26.00
2nd 6 months	50.00	$13.89	$5.81	$1.05	$0.40	$0.00	$0.00	$0.00	$0.00	$0.00	$21.14	$28.09
3rd 6 months	55.00	$15.27	$5.81	$1.50	$0.40	$0.00	$2.17	$0.00	$0.00	$0.00	$25.15	$32.79
4th 6 months	60.00	$16.66	$5.81	$1.50	$0.40	$0.00	$2.37	$0.00	$0.00	$0.00	$26.74	$35.07
5th 6 months	65.00	$18.05	$5.81	$1.80	$0.40	$0.00	$2.57	$0.00	$0.00	$0.00	$28.63	$37.66
6th 6 months	70.00	$19.44	$5.81	$1.80	$0.40	$0.00	$2.77	$0.00	$0.00	$0.00	$30.22	$39.94
	75.00	$20.83	$5.81	$2.50	$0.40	$0.00	$2.96	$0.00	$0.00	$0.00	$32.50	$42.91

7th 6 months												
8th 6 months	80.00	$22.22	$5.81	$2.50	$0.40	$0.00	$3.16	$0.00	$0.00	$0.00	$34.09	$45.19

Special Calculation Note : Apprentice pay based on percentage of above appropriate classification.

Ratio :

1 Apprentice to 1 Journeyman

Jurisdiction (* denotes special jurisdictional note) :

ASHTABULA, CUYAHOGA, GEAUGA, LAKE, LORAIN, PORTAGE*, SUMMIT*

Special Jurisdictional Note : Portage & Summit North of the East-West Turnpike.

Details :

Application of Catalytic materials under class 3 hazardous per MSDS - .65 per hour above the Job Classification basic hourly rate.
Application of Catalytic materials under class 4 hazardous per MSDS - 1.00 per hour above the Job Classification basic hourly rate.

Prevailing Wage Rate
Skilled Crafts

Name of Union: Painter Local 707 Industrial

Change # : LCN01-2016fbLoc707Ind

Craft : Painter Effective Date : 06/24/2016 Last Posted : 06/24/2016

	BHR	Fringe Benefit Payments						Irrevocable Fund		Total PWR	Overtime Rate
		H&W	Pension	App Tr.	Vac.	Annuity	Other	LECET (*)	MISC (*)		
Classification											
Painter Bridge Class 1	$28.47	$5.81	$4.05	$0.40	$0.00	$3.95	$0.00	$0.00	$0.00	$42.68	$56.92
Bridge Blaster	$29.47	$5.81	$4.05	$0.40	$0.00	$3.95	$0.00	$0.00	$0.00	$43.68	$58.42
Bridge Quality Control & Assurance, Flag Person, Equipment Operator, Boat Person, Driver Vacuum (Grit Reclamation Operator)	$24.18	$5.81	$4.05	$0.40	$0.00	$3.95	$0.00	$0.00	$0.00	$38.39	$50.48
Closed Steel Above 55 ft., Open Structural Tanks - Water Towers	$28.47	$5.81	$4.05	$0.40	$0.00	$3.95	$0.00	$0.00	$0.00	$42.68	$56.92
Fiberglass & Insulator Material	$28.47	$5.81	$4.05	$0.40	$0.00	$3.95	$0.00	$0.00	$0.00	$42.68	$56.92
Concrete Sealing	$22.72	$5.81	$4.05	$0.40	$0.00	$3.95	$0.00	$0.00	$0.00	$36.93	$48.29
Apprentice - Painter	**Percent**										

1st 6 months	45.00	$12.81	$5.81	$1.05	$0.40	$0.00	$0.00	$0.00	$0.00	$0.00	$20.07	$26.48
2nd 6 months	50.00	$14.24	$5.81	$1.05	$0.40	$0.00	$0.00	$0.00	$0.00	$0.00	$21.49	$28.61
3rd 6 months	55.00	$15.66	$5.81	$1.50	$0.40	$0.00	$2.17	$0.00	$0.00	$0.00	$25.54	$33.37
4th 6 months	60.00	$17.08	$5.81	$1.50	$0.40	$0.00	$2.37	$0.00	$0.00	$0.00	$27.16	$35.70
5th 6 months	65.00	$18.51	$5.81	$1.80	$0.40	$0.00	$2.57	$0.00	$0.00	$0.00	$29.09	$38.34
6th 6 months	70.00	$19.93	$5.81	$1.80	$0.40	$0.00	$2.77	$0.00	$0.00	$0.00	$30.71	$40.67
7th 6 months	75.00	$21.35	$5.81	$2.50	$0.40	$0.00	$2.96	$0.00	$0.00	$0.00	$33.02	$43.70
8th 6 months	80.00	$22.78	$5.81	$2.50	$0.40	$0.00	$3.16	$0.00	$0.00	$0.00	$34.65	$46.03

Special Calculation Note : Apprentice pay based on percentage of above appropriate classification.

Ratio :

1 Apprentice to 1 Journeyman

Jurisdiction (* denotes special jurisdictional note) :

ASHTABULA, CUYAHOGA, GEAUGA, LAKE, LORAIN, PORTAGE*, SUMMIT*

Special Jurisdictional Note : Portage & Summit North of the East-West Turnpike.

Details :

Painter Bridge Class 1 is Defined as; Bridge Painter, Rigger, Containment Builder
Application of Catalytic materials under class 3 hazardous per MSDS - .65 per hour above the Job Classification basic hourly rate.
Application of Catalytic materials under class 4 hazardous per MSDS - 1.00 per hour above the Job Classification basic hourly rate.
* Concrete Sealing: on highway work, scaling of concrete surfaces, the treating and sealing of bridge decks, the painting and staining of concrete, including the abutments, barricades, noise barriers, lane dividers, etc.

Prevailing Wage Rate
Skilled Crafts

Name of Union: Pipefitter Local 120

Change # : LCN01-2012fbLoc120

Craft : Pipefitter Effective Date : 06/16/2016 Last Posted : 06/16/2016

	BHR		Fringe Benefit Payments						Irrevocable Fund		Total PWR	Overtime Rate
			H&W	Pension	App Tr.	Vac.	Annuity	Other	LECET (*)	MISC (*)		
Classification												
Pipefitter	$36.77		$10.95	$9.30	$0.77	$0.00	$2.25	$0.40	$0.00	$0.00	$60.44	$78.82
Apprentice	Percent											
1st year	42.83	$15.75	$5.13	$0.00	$0.77	$0.00	$0.00	$0.00	$0.00	$0.00	$21.65	$29.52
2nd year	44.93	$16.52	$10.60	$5.30	$0.77	$0.00	$0.00	$0.40	$0.00	$0.00	$33.59	$41.85
3rd year	53.03	$19.50	$10.60	$5.30	$0.77	$0.00	$0.00	$0.40	$0.00	$0.00	$36.57	$46.32
4th year	69.27	$25.47	$10.60	$5.30	$0.77	$0.00	$0.00	$0.40	$0.00	$0.00	$42.54	$55.28
5th year	77.37	$28.45	$10.60	$5.30	$0.77	$0.00	$0.00	$0.40	$0.00	$0.00	$45.52	$59.74

Special Calculation Note : OTHER IS :SUPPLEMENTAL UNEMPLOYMENT BENEFITS

Ratio :

1 Journeymen to 1 Apprentice per project
2-4 Journeymen to 2 Apprentices per project
5-7 Journeymen to 3 Apprentices per project

3 to 1 on jobs with 9 or more journeymen

Jurisdiction (* denotes special jurisdictional note) :
ASHTABULA, CUYAHOGA, GEAUGA, LAKE, MEDINA*, SUMMIT*

Special Jurisdictional Note : Summit County - North of State Route 303 including work within the corporate limits of the City of Hudson, that portion of Medina County North of State Route 18 and Smith Road and including work within the corporate limits of the City of Medina.

Details :
Under pipefittter duties shall include - steam and hot water heating boilers and related controls such as automatic feedwater and low water cut-offs, safety relief valves and gas trains; steam regulators,

traps, steam valves, steam heaters, steam and hot water heating coils; feedwater lines to boilers, condensate pumps, condensate tanks and related piping to boilers, expansion tanks and controls on hot water heating systems; refrigeration and air conditioning systems that are separate from one another and are connected through piping; install, calibrate and maintain pneumatic temperture controls and piping for heating and cooling devices; piping, pumps and controls on the fluent water system in water treatment plants; hose cabinets and automatic fire sprinkler systems; underground water supply piping and devices; all fire stopping of piping systems; to operate a pipe cutting machine, to thread pipe by machine or hand dies; to do oxyacetylene and electric welding on iron and steel pipes when required; to perform other tasks when assigned.

Prevailing Wage Rate
Skilled Crafts

Name of Union: Pipefitter Local 120 Mechanical Equipment

Change # : LCN01-2016fbLoc120

Craft : Pipefitter Effective Date : 06/29/2016 Last Posted : 06/29/2016

	BHR		Fringe Benefit Payments						Irrevocable Fund		Total PWR	Overtime Rate
			H&W	Pension	App Tr.	Vac.	Annuity	Other	LECET (*)	MISC (*)		
Classification												
Pipefitter Mechanical Equipment Service	$29.19		$10.95	$9.30	$0.77	$0.00	$2.25	$0.40	$0.00	$0.00	$52.86	$67.45
Intermediate Journeymen												
Serviceman 1	$20.07		$10.60	$3.30	$0.77	$0.00	$1.25	$0.40	$0.00	$0.00	$36.39	$46.42
Serviceman 2	$22.52		$10.60	$3.30	$0.77	$0.00	$1.25	$0.40	$0.00	$0.00	$38.84	$50.10
Serviceman 3	$25.26		$10.60	$3.30	$0.77	$0.00	$1.25	$0.40	$0.00	$0.00	$41.58	$54.21
Serviceman 4	$28.25		$10.60	$3.30	$0.77	$0.00	$1.25	$0.40	$0.00	$0.00	$44.57	$58.70
MES Trainees	Percent											
1st year	49.88	$14.56	$5.13	$0.00	$0.77	$0.00	$0.00	$0.00	$0.00	$0.00	$20.46	$27.74
2nd year	49.30	$14.39	$5.13	$3.30	$0.77	$0.00	$1.05	$0.00	$0.00	$0.00	$24.64	$31.84
3rd year	55.43	$16.18	$5.13	$3.30	$0.77	$0.00	$1.05	$0.00	$0.00	$0.00	$26.43	$34.52
4th year	59.51	$17.37	$5.13	$3.30	$0.77	$0.00	$1.05	$0.00	$0.00	$0.00	$27.62	$36.31
5th year	63.58	$18.56	$5.13	$3.30	$0.77	$0.00	$1.05	$0.00	$0.00	$0.00	$28.81	$38.09

Special Calculation Note : OTHER IS :SUPPLEMENTAL UNEMPLOYMENT BENEFITS

Ratio :

3 Journeymen to 1 Apprentice
2 Intermediate Servicemen to 1 Serviceman
Trainee per shop

Jurisdiction (* denotes special jurisdictional note) :
ASHTABULA, CUYAHOGA, GEAUGA, LAKE, MEDINA*, SUMMIT*

Special Jurisdictional Note : Summit County - North of State Route 303 including work within the corporate limits of the City of Hudson, that portion of Medina County North of Route 18 and Smith Road and including work within the corporate limits of the City of Medina.

Details :
Work scope but not limited to:Mechanical Service and Maintenance work normally performed by contractors, either by contracts or emergency call basis, who are equipped to handle all work relating to evacuation, charging, start-up, inspection, operating, maintenance and service call necessary to keep mechanical system and controls of a refrigeration , air conditioning, heating and/or ventilation or any other newly installed, remodeled, revamped or redesigned mechanical system in operational order; all fire stopping and piping systems. Shall include but not limited to all maintaining, cleaning, adjusting, repairing, overhauling, starting and balancing of any system or component part thereof, regardless of size or location, including all other service and maintenance work assigned to the employer by the customer. Shall also be allowed to do the following installation work: All residential humidifiers and dehumidifiers, all window type units, all residential heating and cooling systems, excluding steam and hot water, and when a building is not new construction, all refrigeration systems up to 20 tons, split air conditioning systems up to 50 tons, and package or self-contained air conditioning units up to 50 tons.

Prevailing Wage Rate
Skilled Crafts

Name of Union: Plasterer Local 526

Change # : LCN01-2016fbLoc80

Craft : Plaster Effective Date : 06/24/2016 Last Posted : 06/24/2016

	BHR	Fringe Benefit Payments						Irrevocable Fund		Total PWR	Overtime Rate
		H&W	Pension	App Tr.	Vac.	Annuity	Other	LECET (*)	MISC (*)		
Classification											
Plasterer	$29.51	$6.85	$5.05	$0.10	$0.00	$4.92	$0.12	$0.00	$0.00	$46.55	$61.31
Apprecntice Hired Prior to November 1, 2015											
Class 1											
40.00	$11.80	$0.00	$0.00	$0.00	$0.00	$0.00	$0.00	$0.00	$0.00	$11.80	$17.70
45.00	$13.28	$6.85	$5.05	$0.10	$0.00	$4.92	$0.12	$0.00	$0.00	$30.32	$36.96
50.00	$14.76	$6.85	$5.05	$0.10	$0.00	$4.92	$0.12	$0.00	$0.00	$31.80	$39.18
55.00	$16.23	$6.85	$5.05	$0.10	$0.00	$4.92	$0.12	$0.00	$0.00	$33.27	$41.39
60.00	$17.71	$6.85	$5.05	$0.10	$0.00	$4.92	$0.12	$0.00	$0.00	$34.75	$43.60
65.00	$19.18	$6.85	$5.05	$0.10	$0.00	$4.92	$0.12	$0.00	$0.00	$36.22	$45.81
70.00	$20.66	$6.85	$5.05	$0.10	$0.00	$4.92	$0.12	$0.00	$0.00	$37.70	$48.03
75.00	$22.13	$6.85	$5.05	$0.10	$0.00	$4.92	$0.12	$0.00	$0.00	$39.17	$50.24

Special Calculation Note : Other is $.10 for Substance abuse and training.

Ratio :

1 Journeymen to 1 Apprentice
1 Journeymen to 3 Apprentice.

Each employer shall use their best efforts to employ at least 1 certified apprentice in every shop after his first Journeyman.

Jurisdiction (* denotes special jurisdictional note) :
ASHTABULA, CUYAHOGA, GEAUGA, LAKE, LORAIN

Special Jurisdictional Note :

Details :

Prevailing Wage Rate
Skilled Crafts

Name of Union: Plumber Local 55

Change # : LCN0-2016fbLoc55Plum

Craft : Plumber Effective Date : 05/25/2016 Last Posted : 05/25/2016

	BHR		Fringe Benefit Payments						Irrevocable Fund		Total PWR	Overtime Rate
			H&W	Pension	App Tr.	Vac.	Annuity	Other	LECET (*)	MISC (*)		
Classification												
Plumber	$34.90		$9.50	$11.35	$1.18	$0.00	$0.50	$0.55	$0.00	$0.00	$57.98	$75.43
Yard Piping	$23.98		$6.88	$2.15	$0.64	$0.00	$0.50	$0.55	$0.00	$0.00	$34.70	$46.69
Shopman	$19.49		$7.30	$6.13	$0.10	$0.00	$0.50	$0.00	$0.00	$0.00	$33.52	$43.27
Apprentice Initiated BEFORE 5/1/10												
4th year	$25.66		$6.50	$3.21	$1.05	$0.00	$0.50	$0.55	$0.00	$0.00	$37.47	$50.30
5th year	$28.22		$6.83	$3.21	$1.10	$0.00	$0.50	$0.55	$0.00	$0.00	$40.41	$54.52
Apprentice Initiated AFTER 5/1/10	Percent											
1-6 Months	38.29	$13.36	$5.71	$0.00	$0.90	$0.00	$0.00	$0.00	$0.00	$0.00	$19.97	$26.65
7-12 Months	44.42	$15.50	$5.76	$0.16	$0.95	$0.00	$0.00	$0.55	$0.00	$0.00	$22.92	$30.67
2nd year	45.23	$15.79	$6.36	$2.16	$1.00	$0.00	$0.00	$0.55	$0.00	$0.00	$25.86	$33.75
3rd year	50.57	$17.65	$6.36	$3.11	$1.00	$0.00	$0.00	$0.55	$0.00	$0.00	$28.67	$37.49
4th year	57.36	$20.02	$6.41	$3.11	$1.00	$0.00	$0.50	$0.55	$0.00	$0.00	$31.59	$41.60
5th year	64.67	$22.57	$6.78	$3.11	$1.00	$0.00	$0.50	$0.55	$0.00	$0.00	$34.51	$45.79
Shopman After 5/1/10	36.10	$12.60	$6.17	$1.80	$0.10	$0.00	$0.50	$0.00	$0.00	$0.00	$21.17	$27.47

Special Calculation Note : OTHER IS: SUPPLEMENTAL UNEMPLOYMENT

Ratio :

Jurisdiction (* denotes special jurisdictional note) :

1 Apprentice for the first steadily employed journeyman, and thereafter 1 Apprentice for every 2 steadily employed journeymen	ASHTABULA, CUYAHOGA, GEAUGA, LAKE, MEDINA*, SUMMIT*

Special Jurisdictional Note : Summit County - North of State Route 303 including work within the corporate limits of the City of Hudson, that portion of Medina County North of Route 18 and Smith Road and the corporate limits of the City of Medina.

Details :
The Plumber Shopman will have charge of the Employer's shop and warehouse containing plumbing and heating supplies and equipment, and perform such duties as are customarily required by a Plumber or a Plumber's Shopman, including casual delivery of tools and equipment necessary for installation of Plumbing and Heating facilities.

Prevailing Wage Rate
Skilled Crafts

Name of Union: Roofer Local 44

Change # : LCN01-2016fbLoc44

Craft : Roofer Effective Date : 05/01/2016 Last Posted : 04/28/2016

	BHR		Fringe Benefit Payments						Irrevocable Fund		Total PWR	Overtime Rate
			H&W	Pension	App Tr.	Vac.	Annuity	Other	LECET (*)	MISC (*)		
Classification												
Roofer	$31.10		$9.00	$8.55	$0.28	$0.00	$0.00	$0.04	$0.00	$0.00	$48.97	$64.52
Waterproofer	$34.10		$9.00	$8.55	$0.28	$0.00	$0.00	$0.04	$0.00	$0.00	$51.97	$69.02
Applicant & Helper Trainees												
0 to 1851 hrs	$13.75		$0.25	$0.25	$0.28	$0.00	$0.00	$0.04	$0.00	$0.00	$14.57	$21.44
1852 to 3350 hrs	$17.10		$9.00	$8.55	$0.28	$0.00	$0.00	$0.04	$0.00	$0.00	$34.97	$43.52
3351 to 4850 hrs	$21.77		$9.00	$8.55	$0.28	$0.00	$0.00	$0.04	$0.00	$0.00	$39.64	$50.53
4851 to 6350 hrs	$24.88		$9.00	$8.55	$0.28	$0.00	$0.00	$0.04	$0.00	$0.00	$42.75	$55.19
6351 to 7550 hrs	$27.99		$9.00	$8.55	$0.28	$0.00	$0.00	$0.04	$0.00	$0.00	$45.86	$59.85
7551 hrs	$31.10		$9.00	$8.55	$0.27	$0.00	$0.00	$0.04	$0.00	$0.00	$48.96	$64.51
Apprentice	**Percent**											
Start of school	44.20	$13.75	$0.25	$0.25	$0.28	$0.00	$0.00	$0.04	$0.00	$0.00	$14.57	$21.44
600 hrs worked/72 school hrs	45.00	$14.00	$0.25	$0.25	$0.28	$0.00	$0.00	$0.04	$0.00	$0.00	$14.82	$21.81
1200 hrs worked/144 school hrs	50.00	$15.55	$0.25	$0.25	$0.28	$0.00	$0.00	$0.04	$0.00	$0.00	$16.37	$24.15
1800 hrs worked/216 school hrs	55.00	$17.10	$9.00	$8.55	$0.28	$0.00	$0.00	$0.04	$0.00	$0.00	$34.98	$43.53
2400 hrs worked/ 288 school hrs	60.00	$18.66	$9.00	$8.55	$0.28	$0.00	$0.00	$0.04	$0.00	$0.00	$36.53	$45.86
	70.00	$21.77	$9.00	$8.55	$0.28	$0.00	$0.00	$0.04	$0.00	$0.00	$39.64	$50.53

3000 hrs worked/360 school hrs												
3600 hrs worked/432 school hrs	80.00	$24.88	$9.00	$8.55	$0.28	$0.00	$0.00	$0.04	$0.00	$0.00	$42.75	$55.19
4200 hrs worked/504 school hrs	90.00	$27.99	$9.00	$8.55	$0.28	$0.00	$0.00	$0.04	$0.00	$0.00	$45.86	$59.85
4800 hrs/576 school hrs	100.00	$31.10	$9.00	$8.55	$0.28	$0.00	$0.00	$0.04	$0.00	$0.00	$48.97	$64.52

Special Calculation Note : There are no special calculations for this skilled craft wage rate are required at this time. Other $0.04 is for Drug Testing.

Ratio :

2 Journeymen to 1 Apprentice
1 Applicant/Helper Trainee

Jurisdiction (* denotes special jurisdictional note) :
ASHTABULA, CUYAHOGA, ERIE, GEAUGA, LAKE, LORAIN*, SANDUSKY

Special Jurisdictional Note : Lorain (The Ohio Turnpike North)

Details :
$0.04 for "Other" is for Drug Testing

Prevailing Wage Rate
Skilled Crafts

Name of Union: Sheet Metal Local 33 (Cleveland)

Change # : LCN01-2016fbLoc33Clev

Craft : Sheet Metal Worker Effective Date : 08/17/2016 Last Posted : 08/17/2016

	BHR		Fringe Benefit Payments						Irrevocable Fund		Total PWR	Overtime Rate
			H&W	Pension	App Tr.	Vac.	Annuity	Other	LECET (*)	MISC (*)		
Classification												
Sheet Metal Worker	$36.10		$7.59	$13.50	$1.19	$0.00	$1.65	$0.00	$0.00	$0.00	$60.03	$78.08
Apprentice	Percent											
1st year	40.00	$14.44	$7.59	$2.22	$0.00	$0.00	$0.00	$0.00	$0.00	$0.00	$24.25	$31.47
2nd year	44.95	$16.23	$7.59	$2.50	$1.19	$0.00	$1.65	$0.00	$0.00	$0.00	$29.16	$37.27
3rd year	49.95	$18.03	$7.59	$2.78	$1.19	$0.00	$1.65	$0.00	$0.00	$0.00	$31.24	$40.26
4th year	59.95	$21.64	$7.59	$3.33	$1.19	$0.00	$1.65	$0.00	$0.00	$0.00	$35.40	$46.22
5th year	74.95	$27.06	$7.59	$4.16	$1.19	$0.00	$1.65	$0.00	$0.00	$0.00	$41.65	$55.18

Special Calculation Note : No special calculations for this skilled craft wage rate are required at this time.

Ratio :

1 Journeyman to 1 Apprentice
2 Journeymen to 1 Apprentice
3 Journeymen to 2 Apprentices
4 Journeymen to 2 Apprentices
5 Journeymen to 3 Apprentices
6 Journeymen to 3 Apprentices

Jurisdiction (* denotes special jurisdictional note) :
ASHTABULA, CUYAHOGA, GEAUGA, LAKE

Special Jurisdictional Note :

Details :

Prevailing Wage Rate
Skilled Crafts

Name of Union: Sheet Metal Local 33 (Cleveland)

Change # : LCN02-2016fbLoc33Clev

Craft : Sheet Metal Worker Effective Date : 11/07/2016 Last Posted : 10/26/2016

	BHR		Fringe Benefit Payments						Irrevocable Fund		Total PWR	Overtime Rate
			H&W	Pension	App Tr.	Vac.	Annuity	Other	LECET (*)	MISC (*)		
Classification												
Sheet Metal Worker	$36.30		$7.59	$13.50	$1.24	$0.00	$1.75	$0.00	$0.00	$0.00	$60.38	$78.53
Apprentice	Percent											
1st year	40.00	$14.52	$7.59	$2.22	$0.00	$0.00	$0.00	$0.00	$0.00	$0.00	$24.33	$31.59
2nd year	44.95	$16.32	$7.59	$2.50	$1.24	$0.00	$1.75	$0.00	$0.00	$0.00	$29.40	$37.56
3rd year	49.95	$18.13	$7.59	$2.78	$1.24	$0.00	$1.75	$0.00	$0.00	$0.00	$31.49	$40.56
4th year	59.95	$21.76	$7.59	$3.33	$1.24	$0.00	$1.75	$0.00	$0.00	$0.00	$35.67	$46.55
5th year	74.95	$27.21	$7.59	$4.16	$1.24	$0.00	$1.75	$0.00	$0.00	$0.00	$41.95	$55.55

Special Calculation Note : No special calculations for this skilled craft wage rate are required at this time.

Ratio :

1 Journeyman to 1 Apprentice
2 Journeymen to 1 Apprentice
3 Journeymen to 2 Apprentices
4 Journeymen to 2 Apprentices
5 Journeymen to 3 Apprentices
6 Journeymen to 3 Apprentices

Jurisdiction (* denotes special jurisdictional note) :
ASHTABULA, CUYAHOGA, GEAUGA, LAKE

Special Jurisdictional Note :

Details :

Prevailing Wage Rate
Skilled Crafts

Name of Union: Truck Driver HevHwy 436

Change # : LCN01-2015fbLoc436

Craft : Truck Driver Effective Date : 08/12/2015 Last Posted : 08/12/2015

	BHR	Fringe Benefit Payments						Irrevocable Fund		Total PWR	Overtime Rate
		H&W	Pension	App Tr.	Vac.	Annuity	Other	LECET (*)	MISC (*)		
Classification											
Truck Driver - Straight and Dump Trucks including Asphalt-Straight Fuel -Warehousemen-Straight Fuel	$26.90	$4.80	$10.05	$0.00	$0.00	$0.00	$0.00	$0.00	$0.00	$41.75	$55.20
Semi Fuel-Semi Tractor Drivers-Darts-Tank Asphalt Spreaders-Low Boys. Carryall Drivers-Rockers- Hilifts-Forklifts-Xtra long Trailers etc.	$27.40	$4.80	$10.05	$0.00	$0.00	$0.00	$0.00	$0.00	$0.00	$42.25	$55.95

Special Calculation Note : No special calculations for this skilled craft wage rate are required at this time.

Ratio :

Jurisdiction (* denotes special jurisdictional note) :
CUYAHOGA, LAKE, GEAUGA

Special Jurisdictional Note :

Details :

Eculids include: Darts, Tank, Asphalt Spreaders, Low Boys, Carry-All Drivers, Tourna-Rockers, High-Lifts, Fork-Lifts, Extra Long Trailers and Semi-Tractor and Tri-Axle Trailer, Tandem Tractor and Tandem Trailer, Tandem Trailer and Tri-Axle Trailer, Tag Along Trailer, Expandable Trailers or towing requiring road permits. Ready-Mix (Agitator or non-agitator) Bulk Concrete Drivers, dry Batch Trucks, Articulated End Dump, Bus Drivers.

Holiday Pay = 7 holidays X (8 hours X BHR)/2080 hours per year.
This pay is only for those employee's who started driving before 1976.
To be eligible to receive holiday pay an employee must have worked at least one (1) day in the period fourteen (14) calendar days prior to the holiday and/or in the fourteen (14) day calendar period after the holiday.

Prevailing Wage Determination Cover Letter

County: -Select-
Determination Date: 10/27/2016
Expiration Date: 01/27/2017

THE FOLLOWING PAGES ARE PREVAILING RATES OF WAGES ON PUBLIC IMPROVEMENTS FAIRLY ESTIMATED TO BE MORE THAN THE AMOUNT IN O.R.C. SEC. 4115.03 (b) (1) or (2), AS APPLICABLE.

Section 4115.05 provides, in part: "Where contracts are not awarded or construction undertaken within ninety days from the date of the establishment of the prevailing wages, there shall be a redetermination of the prevailing rate of wages before the contract is awarded." The expiration date of this wage schedule is listed above for your convenience only. This wage determination is not intended as a blanket determination to be used for all projects during this period without prior approval of this Department.

Section 4115.04, Ohio Revised Code provides, in part: "Such schedule of wages shall be attached to and made a part of the specifications for the work, and shall be printed on the bidding blanks where the work is done by contract..."

The contract between the letting authority and the successful bidder shall contain a statement requiring that mechanics and laborers be paid a prevailing rate of wage as required in Section 4115.06, Ohio Revised Code.

The contractor or subcontractor is required to file with the contracting public authority upon completion of the project and prior to final payment therefore an affidavit stating that he has fully complied with Chapter 4115 of the Ohio Revised Code.

The wage rates contained in this schedule are the "Prevailing Wages" as defined by Section 4115.03, Ohio Revised Code (the basic hourly rates plus certain fringe benefits). These rates and fringes shall be a minimum to be paid under a contract regulated by Chapter 4115 of the Ohio Revised Code by contractors and subcontractors. The prevailing wage rates contained in this schedule include the effective dates and wage rates currently on file. In cases where future effective dates are not included in this schedule, modifications to the wage schedule will be furnished to the Prevailing Wage Coordinator appointed by the public authority as soon as prevailing wage rates increases are received by this office.

"There shall be posted in a prominent and accessible place on the site of work a legible statement of the Schedule of Wage Rates specified in the contract to the various classifications of laborers, workmen, and mechanics employed, said statement to remain posted during the life of such contract." Section 4115.07, Ohio Revised Code.

Apprentices will be permitted to work only under a bona fide apprenticeship program if such program exists and if such program is registered with the Ohio Apprenticeship Council.

Section 4115.071 provides that no later than ten days before the first payment of wages is due to any employee of any contractor or subcontractor working on a contract regulated by Chapter 4115, Ohio Revised Code, the contracting public authority shall appoint one of his own employees to act as the prevailing wage coordinator for said contract. The duties of the prevailing wage coordinator are outlined in Section 4115.071 of the Ohio Revised Code.

Section 4115.05 provides for an escalator in the prevailing wage rate. Each time a new rate is established, that rate is required to be paid on all ongoing public improvement projects.

A further requirement of Section 4115.05 of the Ohio Revised Code is: "On the occasion of the first pay date under a contract, the contractor shall furnish each employee not covered by a collective bargaining agreement or understanding between employers and bona fide organizations of Labor with individual written notification of the job classification to which the employee is assigned, the prevailing wage determined to be applicable to

that classification, separated into the hourly rate of pay and the fringe payments, and the identity of the prevailing wage Coordinator appointed by the public authority. The contractor or subcontractor shall furnish the same notification to each affected employee every time the job classification of the employee is changed."

Work performed in connection with the installation of modular furniture may be subject to prevailing wage.

THIS PACKET IS NOT TO BE SEPARATED BUT IS TO REMAIN COMPLETE AS IT IS SUBMITTED TO YOU. (Reference guidelines and forms are included in this packet to be helpful in the compliance of the Prevailing Wage law.)
wh1500

SECTION 9
DRAWINGS

1092299

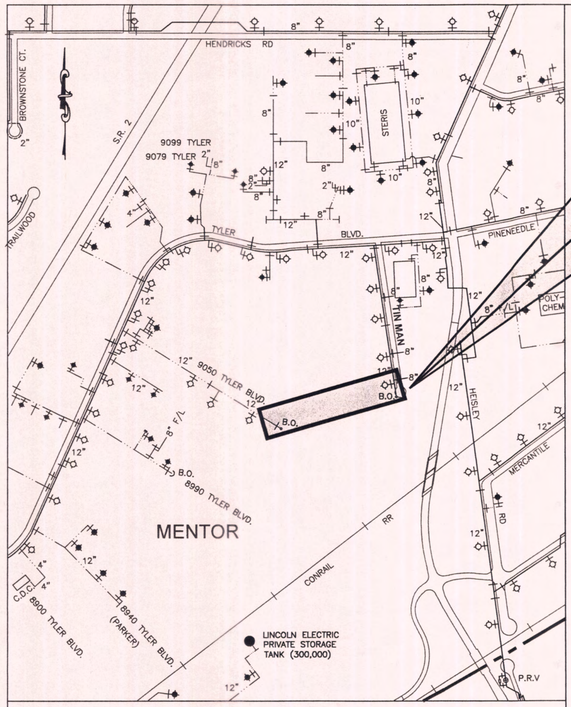

LOCATOR MAP SCALE: 1" = 1000'

AQUA

AQUA OHIO, INC.

LAKE SHORE DIVISION ~ LAKE

DE NORA TECH ~ 8" WATER MAIN EXTENSION

CITY of MENTOR, LAKE COUNTY, OHIO

ACTIVITY NO. 230-150-62382

PREPARED BY
THE SERVICE CENTER ENGINEERING DEPT.

LEGEND

WATER METER/SERVICE
WATER VALVE
EXISTING WATER LINE
PROPOSED WATER LINE
FIRE HYDRANT
GAS LINE
FENCE LINE
GUARD RAIL
SANITARY SEWER
STORM SEWER
MANHOLES
CATCH BASIN
CURB INLET
BURIED TELE.
BURIED ELECTRIC
RIGHT OF WAY
DITCH LINE
PROPERTY LINE
ROAD CENTERLINE
POWER POLE
LIGHT POLE
GUY WIRE
MONUMENT
LAMP POST

YARD DRAIN
GAS SERVICE
GAS VALVE
PROPERTY PIN
PINE TREE
TREE/BUSH

MAILBOX
TELEPHONE BOX
ELECTRICAL BOX
TRAFFIC BOX
TRAFFIC POLE
POST/BOLLARD
STREET SIGN

TABLE OF CONTENTS

DRAWING NO. DESCRIPTION

1a..... TITLE AND APPROVALS
1b..... WATER LINE GENERAL NOTES
2..... CONSTRUCTION PLAN ~ STA. 0+00 - 9+50
3..... CONSTRUCTION PLAN ~ STA. 9+50 - END
4..... CONSTRUCTION PROFILE ~ STA. 0+00 - END
5..... AQUA STANDARD DETAILS
6.....STANDARD SOIL EROSION & SEDIMENT CONTROL DETAILS

CONSTRUCTION INSPECTOR
CONSTRUCTION INSPECTOR COMPANY
CONTRACTOR
START DATE
SUBSTANTIAL COMPLETION DATE
FINAL COMPLETION DATE

AQUA OHIO AREA MANAGER — DATE
AQUA OHIO PROJECT MANAGER — DATE
AQUA OHIO FIELD SUPERVISOR — DATE
AQUA OHIO CONSTRUCTION COORDINATOR — DATE
DATE

STATE OF OHIO PETER JOHN KUSKY E-84587 REGISTERED PROFESSIONAL ENGINEER

REGISTERED PROFESSIONAL ENGINEER
5/20/16
DATE

APPROVALS

De Nora Tech. - 1" WATER SERVICE CONNECTION (@ TO BE INSTALLED UNDER THIS CONTRACT)		
SHORT SIDE -		
CURB STOPS - __	METER VAULTS -	
LONG SIDE -		
CURB STOPS -	METER VAULTS -	
8" DIP Water Main - Approximately 1,377 Lf.		
FIRE HYDRANTS		
No. of hydrants to be installed - 1		
No. of hydrants to be removed -		
VALVES		
TYPE	SIZE	QUANTITY
GATE VALVE	8"	4
GATE VALVE	6"	-

OHIO Utilities Protection SERVICE
Call Before You Dig

2 WORKING DAYS BEFORE YOU DIG
1-800-362-2764

GENERAL CONSTRUCTION NOTES:

1. PRE-CONSTRUCTION MEETING WILL BE SCHEDULED PRIOR TO CONSTRUCTION WITH ALL APPROVING AGENCIES INVITED.
2. PRE-CONSTRUCTION VIDEOTAPE WILL BE MADE TO DOCUMENT EXISTING CONDITIONS PRIOR TO CONSTRUCTION.
3. THE CONTRACTOR SHALL COORDINATE THE CROSSING OF RESIDENTIAL DRIVEWAYS TO MAINTAIN ACCESS.
4. TRAFFIC CONTROL WILL CONFORM TO STATE AND LOCAL REGULATIONS.

WATER SUPPLY APPROVED
OHIO ENVIRONMENTAL PROTECTION AGENCY
AS EVIDENCED BY COPY OF LETTER OF APPROVAL HERETO ATTACHED

RECEIVED
JUN 08 2016
OHIO EPA-DDAGW

GENERAL WATERLINE INSTALLATION NOTES

1. CONTRACTOR TO PROVIDE LINE AND GRADE STAKES AT 100' INTERVALS FOR WATER MAIN AND FOR EACH FITTING AND APPURTENANCE. A COPY OF CUT SHEET SHALL BE PROVIDED TO FIELD INSPECTOR PRIOR TO INSTALLATION.
2. WATER WORK SHALL NOT BEGIN UNTIL AREAS OF WATERLINE CONSTRUCTION ARE ROUGH GRADED (WITHIN 1FT. OF FINISHED GRADE" AND FILL AREAS ARE COMPLETED AND COMPACTED.)
3. NO WATER SERVICE CONNECTIONS TO ANY BUILDINGS SHALL BE PERMITTED PRIOR TO FINAL ACCEPTANCE BY AQUA OHIO, INC. WHICH SHALL INCLUDE APPROVED RECTIFICATION OF ALL PUNCH LIST ITEMS. ONCE PUNCH LIST ITEMS ARE COMPLETED, THE BUILDER SHALL BE RESPONSIBLE FOR GRADE ADJUSTMENTS TO WATER FACILITIES AT TIME OF BUILDING CONSTRUCTION AND DURING FINAL SITE GRADING.
4. A MINIMUM OF 5 FEET HORIZONTAL SEPARATION SHALL BE MAINTAINED BETWEEN UTILITY CONDUIT CROSSOVERS AND WATERLINE APPURTENANCES, I.E. HYDRANTS, VALVES, TEES, ETC.
5. WATER LINE MATERIALS AND INSTALLATION PROCEDURES SHALL MEET OR EXCEED ALL APPLICABLE A.W.W.A. STANDARDS INCLUDING BUT NOT LIMITED TO THE MOST RECENT VERSIONS OF C600 AND C651.
6. WATERLINE MATERIAL AND INSTALLATION PROCEDURES SHALL BE IN ACCORDANCE WITH AQUA OHIO SPECIFICATIONS. PRESSURE CLASS 350 D.I.P. POLYWRAPPED, FITTINGS CLASS 53 CEMENT LINED POLYWRAPPED AND HDPE TUBING WITH COMPRESSION FITTINGS FOR DOMESTIC SERVICES OR 2" HDPE SDR 9 POLYETHYLENE 3408 PIPE AROUND CUL-DE-SAC. IF POLYETHYLENE IS USED, A 12 GAUGE WIRE AND METALLIC CAUTION TAPE MUST BE USED.
7. ALL PIPE AND APPURTENANCES INSTALLED ON A DEPRESSURIZED WATER MAIN ARE TO BE WIPED CLEAN AND ALL INTERIOR SURFACES SATURATED WITH A MINIMUM 1% CHLORINE SOLUTION.
8. ALL MECHANICAL JOINTS ARE TO BE RESTRAINED USING MEGALUG OR "FORD" EQUIVALENT. FIRE LINE RISERS TO INCLUDE (2) 5/8" ALL THREAD RODS EXTENDING FROM LOWER BEND TO RISER FLANGE.
9. A RESTRAINT GASKET (FIELD-LOK OR APPROVED EQUAL) SHALL BE UTILIZED ON PUSH-ON JOINTS AS REQUIRED BY AQUA OHIO STANDARDS.
10. ALL DUCTILE IRON PIPE AND FITTINGS TO BE POLYWRAPPED AND TAPED AS PER DUCTILE IRON PIPE RESEARCH ASSOCIATION RECOMMENDATIONS.
11. DUCTILE IRON IN CASING SHALL BE CLASS 52, POLYWRAPPED AND ALL PUSH-ON JOINTS SHALL BE EQUIPPED WITH RESTRAINT GASKETS (FIELD-LOK OR APPROVED EQUAL) AND STAINLESS STEEL CASING SPACERS ARE REQUIRED.
12. ALL THRUST BLOCKING WILL BE SOLID CONCRETE BLOCKS WITH OAK WEDGES OR POURED CONCRETE, PER AQUA STANDARDS DRAWING.
13. ALL VALVES ARE OPEN LEFT AND ALL MAIN LINE VALVES ARE TO BE PLACED ON A MINIMUM OF ONE 4" SOLID CONCRETE BLOCK. ALL VALVES TO HAVE #57 LIMESTONE UP TO OPERATING NUT OF VALVE.
14. ALL FIRE HYDRANTS TO HAVE A MINIMUM OF ½ CUBIC YARD OF #57 LIMESTONE 6" ABOVE DRAIN HOLE OR EQUIVALENT SIZE BANK RUN GRAVEL. PLASTIC SHALL BE PLACED OVER STONE PRIOR TO BACKFILL. ALL HYDRANTS TO BE TURNED WITH 4-1/2" NOZZLE FACING STREET AND MEETING FIRE DEPARTMENT SPECIFICATIONS.
15. ALL VALVE BOX COVERS ARE TO BE PAINTED BLUE. CONTRACTOR RESPONSIBLE FOR ADJUSTMENTS TO VALVE BOXES, CURB BOXES, AND FIRE HYDRANTS WITH RESPECT TO FINAL GRADING. ALL VALVES BOXES IN NEW OR PROPOSED PAVEMENT SHALL BE SCREW TYPE.
16. WATERLINE WILL NOT BE ACCEPTED OR PLACED IN SERVICE UNTIL CONTRACTOR CONDUCTS AND OBTAINS SATISFACTORY RESULTS OF PRESSURE AND CHLORINE TESTS. BACTERIA TEST WILL THEN BE CONDUCTED BY AQUA OHIO. ALL VALVES, HYDRANTS, AND CURB BOXES TO BE TO PROPER GRADE PRIOR TO ACCEPTANCE.
17. THE CONTRACTOR SHALL TAKE PRECAUTIONARY MEASURES TO ENSURE SAFETY OF THE PUBLIC ON AND SURROUNDING THE SITE DURING CONSTRUCTION.
18. THE LOCATION OF EXISTING UTILITIES AND STRUCTURES, BOTH ABOVE GROUND AND UNDERGROUND ARE SHOWN ON THE PLANS FROM DATA AVAILABLE AT THE TIME OF THE SURVEY AND ARE NOT NECESSARILY COMPLETE AND/OR CORRECT. THE EXACT LOCATION AND PROTECTION OF EXISTING UTILITIES AND STRUCTURES IS THE RESPONSIBILITY OF THE CONTRACTOR. DURING CONSTRUCTION, THE CONTRACTOR SHALL USE DUE DILIGENCE IN PROTECTING FROM DAMAGE ALL EXISTING UTILITIES AND STRUCTURES WHETHER SHOWN ON PLANS OR NOT. IF DAMAGE IS CAUSED, THE CONTRACTOR SHALL BE RESPONSIBLE FOR REPAIR OR RESTORATION OF SAME IN ACCORDANCE WITH THE DIRECTIONS OF THE OWNER. THE CONTRACTOR SHALL CONTACT OHIO UTILITIES PROTECTION SERVICE, AT 1-800-362-2764, TWO WORKING DAYS PRIOR TO START OF CONSTRUCTION AS REQUIRED BY OHIO LAW.
19. THE WATERLINE SHALL BE INSTALLED AT 4' -0" OF COVER FROM EXISTING/PROPOSED GRADE TO TOP OF THE WATERLINE. THIS 4' SHALL BE MAINTAINED UNLESS OTHERWISE NOTED.
20. A MINIMUM 10' -0" HORIZONTAL SEPARATION MUST BE MAINTAINED BETWEEN ALL STORM AND SANITARY SEWERS AND WATERLINE,OUT TO OUT.
21. A MINIMUM 18" VERTICAL SEPARATION MUST BE MAINTAINED BETWEEN ALL STORM AND SANITARY SEWERS AND WATERLINE, OUT TO OUT.
22. DRIVEWAY RESTORATION SHALL BE AS FOLLOWS: CONCRETE DRIVEWAYS WILL BE REPLACED FROM THE NEAREST EXISTING JOINT TO THE STREET, FULL SLAB REPLACEMENT. ASPHALT DRIVEWAYS WILL BE REPLACED FROM THE FARTHEST TRENCH CUT LINE TO THE STREET. REPAIRING ONLY THE TRENCH WIDTH CUT ACROSS A DRIVEWAY ONLY IS NOT ACCEPTABLE.
23. THE CONTRACTOR SHALL VISIT THE SITE TO PERSONALLY ASCERTAIN THE NATURE OF THE WORK INVOLVED AND THOROUGHLY BECOME FAMILIAR WITH THE SITE PRIOR TO THE SUBMISSION OF HIS OR HER BID.
24. THE CONTRACTOR SHALL CAREFULLY LAYOUT THE WATERLINE AND ALL RELATED FACILITIES TO ENSURE THAT THEY ARE LOCATED WITHIN THE PUBLIC RIGHT-OF-WAY AND/OR ACQUIRED EASEMENTS AS INDICATED.
25. THE CONTRACTOR IS RESPONSIBLE FOR RESTORING THE SITE (YARDS, DITCHES, DRIVEWAYS, ETC.) TO ITS ORIGINAL OR BETTER CONDITION UPON COMPLETION OF THE WATERLINE INSTALLATION.
26. THE CONTRACTOR MAY DEFLECT THE WATERLINE AS PER MANUFACTURER'S SPECS WITH PERMISSION FROM AQUA AS NEEDED TO MAINTAIN MINIMUM HORIZONTAL AND VERTICAL SEPARATION DISTANCES.
27. THE CONTRACTOR SHALL CAREFULLY PRESERVE BENCHMARKS, PROPERTY CORNERS, REFERENCE POINTS, AND STAKES. ANY BENCHMARK, PROPERTY CORNER, OR SURVEY MARKER DAMAGED OR DISTURBED BY THE CONTRACTOR SHALL BE RESET BY AN OHIO REGISTERED PROFESSIONAL SURVEYOR AT THE CONTRACTOR'S EXPENSE.
28. ALL MAIL BOXES, TRAFFIC CONTROL SIGNS AND ADVERTISING SIGNS ENCOUNTERED DURING CONSTRUCTION SHALL BE REPLACED IMMEDIATELY AFTER THE WATER MAIN HAS BEEN INSTALLED AND BACKFILLED. TEMPORARY SIGNS TO BE USED AS NEEDED.
29. BOOSTER PUMPS ARE NOT PERMITTED ON SERVICE CONNECTIONS.
30. WATER SERVICE LINE CONNECTIONS ARE NOT TO BE INSTALLED UNTIL PRESSURE TEST AND BACTERIA TESTS HAVE BEEN APPROVED.
31. THE NORMAL WORKING PRESSURE IN WATER LINES SHALL NOT BE LESS THAN 35 PSI.

RECEIVED
JUN 02 2016
OHIO EPA NEDO

NOTE: THIS LIST DOES NOT SUPERCEDE CONTRACT SPECIFICATIONS AND IS INTENDED ONLY AS A GUIDELINE TO INSTALLING WATERLINES WITHIN THE AQUA OHIO SERVICE AREA. ANY QUESTIONS SPECIFIC TO YOUR PROJECT, SHOULD BE DISCUSSED WITH THE ONSITE INSPECTOR.

NO.	DATE	BY	REVISIONS

DRAWN: L. McClary	DATE: March, 2016	
APPROVED:	DATE:	
AS BUILT:	DATE:	
BACKGROUND:		

0' 30' 60' 90' 120'
SCALE: 1" = 30'

AQUA

PREPARED BY:
SERVICE CENTER - ENGINEERING DEPT.
6650 SOUTH AVE., BOARDMAN OHIO 44512

DIVISION
LAKE SHORE DIVISION

DE NORA TECH ~ 8" WATER MAIN EXTENSION
CITY of MENTOR, LAKE COUNTY, OHIO

ALL EXISTING UTILIES SHOWN IN APPROXIMATE LOCATIONS. CONTRACTOR TO VERIFY PRIOR TO CONSTRUCTION

OPEN CUT PAVEMENT TO INSTALL MAIN. PREMIUM BACKFILL REQUIRED. REPLACE PER TYPE "A" PAVEMENT SPECS & DETAIL. (AS REQUIRED)

IT IS THE CONTRACTOR'S RESPONSIBILITY FOR RESTORING THE SITE TO ITS ORIGINAL OR BETTER CONDITION UPON COMPLETION OF THE PROPOSED INSTALLATION. PREMIUM COMPACTED BACKFILL IS REQUIRED WITHIN 5' OF EDGE OF PAVEMENT AND UNDER SIDEWALKS

TIE TO EXISTING 12" MAIN BY INSTALLING 12" X 8" STAINLESS STEEL TAPPING SLEEVE- WITH 8" GATE VALVE (MJ,MJ). (FIELD LOCATE)

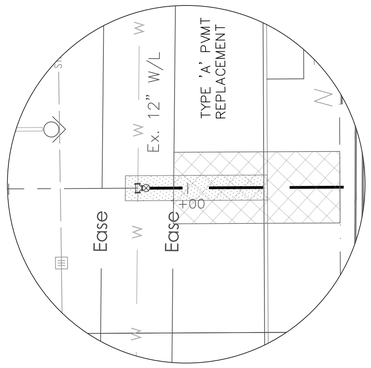

TIE-IN DETAIL
Scale: 1" = 20'

BEGIN STATIONING FROM EDGE OF BUILDING.

PROPOSED 8" D.I.P. WATER LINE PRESSURE CLASS 350 (polywrapped)

8" x 45° MJ BEND
STA. 2+28 ±
STA. 3+66 ±

INSTALL TYPE II HYDRANT ASSEMBLY WITH MARKINGS PER MENTOR FIRE DEPARTMENT. (2) CONCRETE BOLLARDS REQ'D. IN LOCATION SHOWN.

FIRE HYDRANT ASSEMBLY ~ TYPE II
Sta. 5+23 ±

8" x 11.25° MJ BEND
STA. 5+54 ±

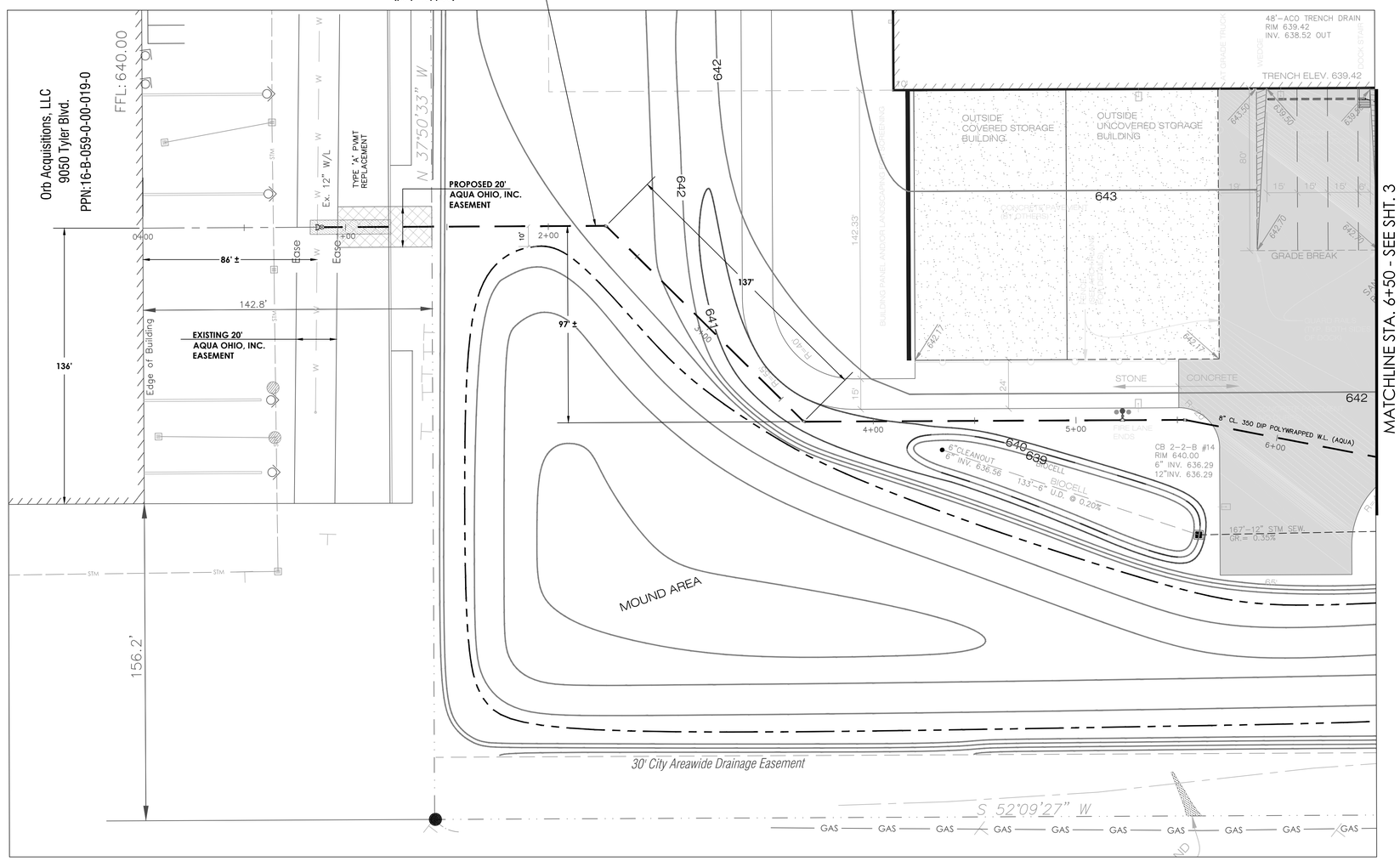

NORTH

NO.	DATE	REVISIONS	BY

DESIGNED: Lori McClary	DATE: March, 2016	0' 30' 60' 90' 120'	AQUA	PREPARED BY: SERVICE CENTER - ENGINEERING DEPT. 6650 SOUTH AVE., BOARDMAN OHIO 44512	DIVISION LAKE SHORE DIVISION	DE NORA TECH ~ 8" WATER MAIN EXTENSION	2
DRAWN:	DATE:					CITY of MENTOR, LAKE COUNTY, OHIO	6
BACKGROUND: LDC, Inc.		SCALE: 1" = 30'					

ALL EXISTING UTILIES SHOWN IN APPROXIMATE LOCATIONS. CONTRACTOR TO VERIFY PRIOR TO CONSTRUCTION

IT IS THE CONTRACTOR'S RESPONSIBILITY FOR RESTORING THE SITE TO ITS ORIGINAL OR BETTER CONDITION UPON COMPLETION OF THE PROPOSED INSTALLATION. PREMIUM COMPACTED BACKFILL IS REQUIRED WITHIN 5' OF EDGE OF PAVEMENT AND UNDER SIDEWALKS

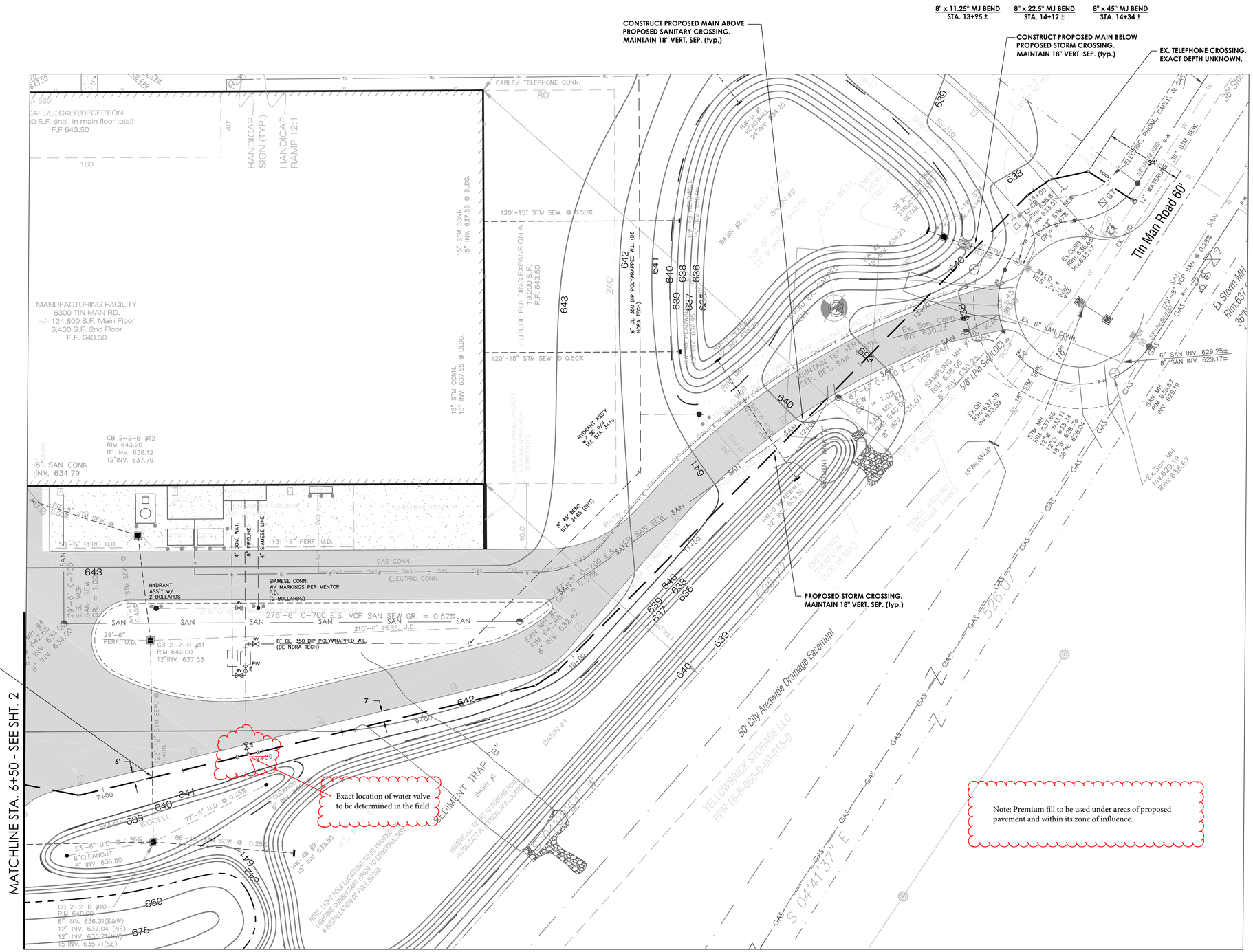

TIE TO EXISTING 12" MAIN ON TIN MAN RD. BY INSTALLING 12" X 8" STAINLESS STEEL TAPPING SLEEVE-WITH 8" GATE VALVE (MJ,MJ). (FIELD LOCATE)

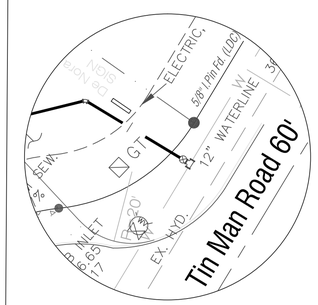

TIE-IN DETAIL
Scale: 1" = 20'

NO.	DATE	REVISIONS	BY

DESIGNED: Lori McClary	DATE: March, 2016	0' 30' 60' 90' 120'	AQUA
DRAWN:	DATE:	SCALE: 1" = 30'	
BACKGROUND: LDC, Inc.			

PREPARED BY:
SERVICE CENTER - ENGINEERING DEPT.
6650 SOUTH AVE., BOARDMAN OHIO 44512

DIVISION
LAKE SHORE DIVISION

DE NORA TECH ~ 8" WATER MAIN EXTENSION
CITY of MENTOR, LAKE COUNTY, OHIO

ALL EXISTING UTILIES SHOWN IN APPROXIMATE LOCATIONS. CONTRACTOR TO VERIFY PRIOR TO CONSTRUCTION

IT IS THE CONTRACTOR'S RESPONSIBILITY FOR RESTORING THE SITE TO ITS ORIGINAL OR BETTER CONDITION UPON COMPLETION OF THE PROPOSED INSTALLATION. PREMIUM COMPACTED BACKFILL IS REQUIRED WITHIN 5' OF EDGE OF PAVEMENT AND UNDER SIDEWALKS

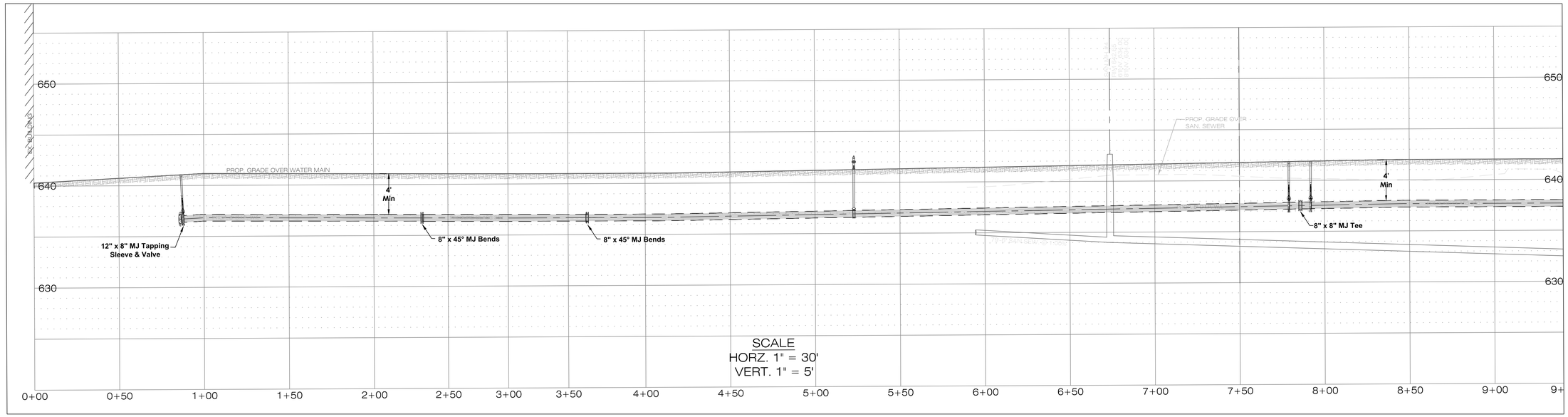

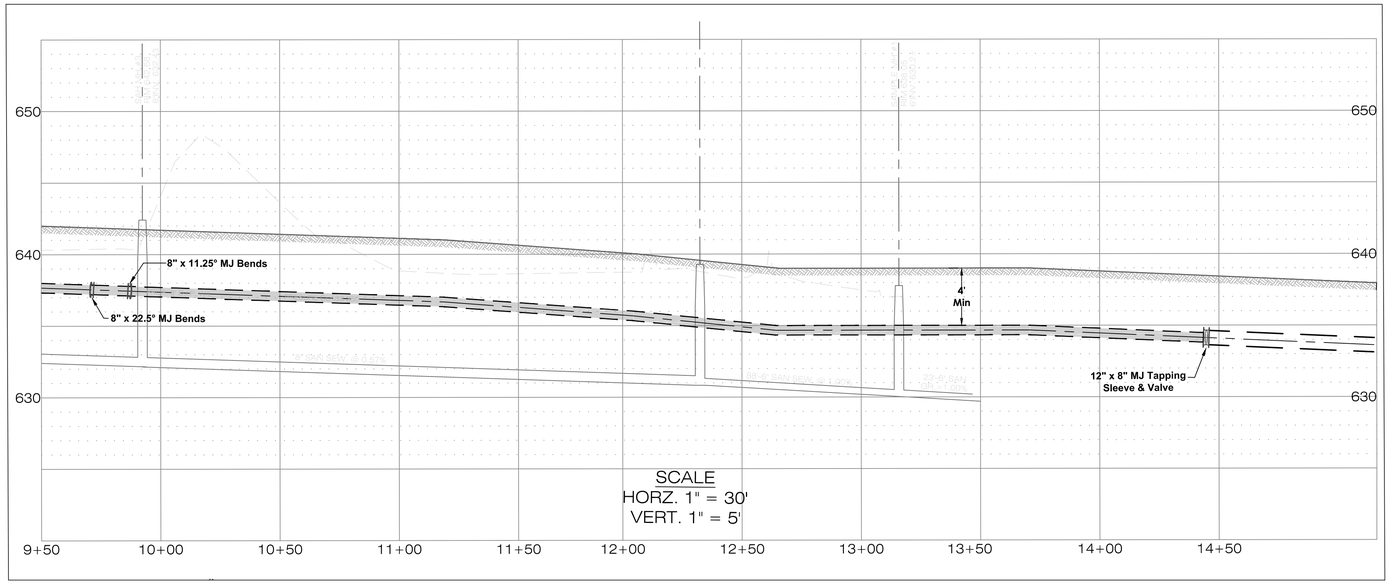

NORTH

NO.	DATE	REVISIONS	BY

DESIGNED: Lori McClary | DATE: March, 2016
DRAWN: | DATE:
BACKGROUND: LDC, Inc.

0' 30' 60' 90' 120'
SCALE: 1" = 30'

AQUA

PREPARED BY:
SERVICE CENTER - ENGINEERING DEPT.
6650 SOUTH AVE., BOARDMAN OHIO 44512

DIVISION
LAKE SHORE DIVISION

DE NORA TECH ~ 8" WATER MAIN EXTENSION - PROFILE
CITY of MENTOR, LAKE COUNTY, OHIO

4
6

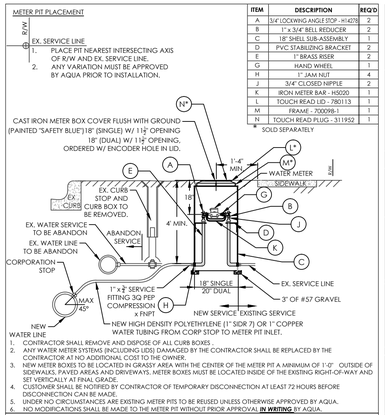

ITEM	DESCRIPTION	REQ'D
A	3/4" LOCKING ANGLE STOP - H14278	2
B	1" x 3/4" BELL REDUCER	2
C	18" SHELL SUB-ASSEMBLY	1
D	PVC STABILIZING BRACKET	2
E	1" BRASS RISER	2
G	HAND WHEEL	1
H	1" JAM NUT	4
J	3/4" CLOSED NIPPLE	2
K	IRON METER BAR - HS020	1
L	TOUCH READ LID - 780113	1
M	FRAME - 700098-1	1
N	TOUCH READ PLUG - 311952	1

* SOLD SEPARATELY

TYPICAL WATER SERVICE TAP

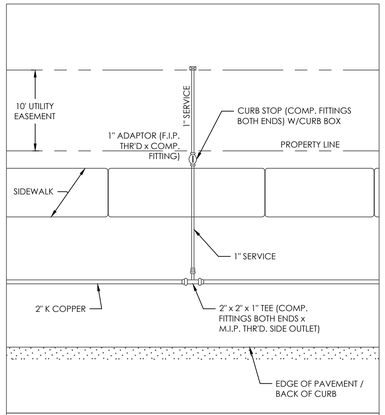

TYPICAL PRE-TAP PLAN

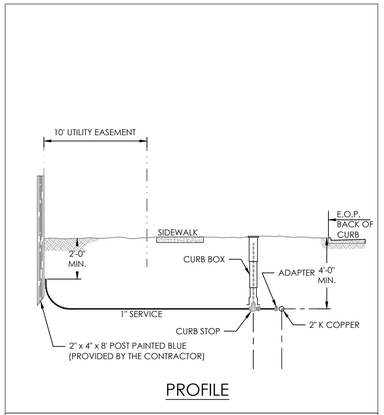

TYPICAL PRE-TAP CUL-DE-SAC LOTS ONLY

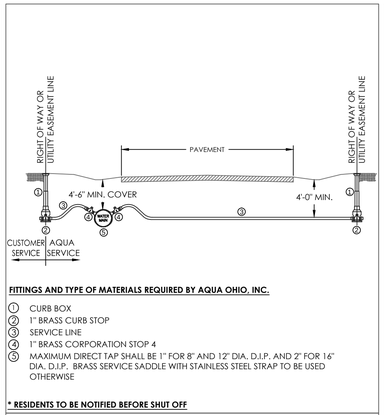

AQUA OHIO, INC. TYPICAL SERVICE LINE INSTALLATION

- FIELD-LOK GASKETS OR OTHER APPROVED PIPE RESTRAINT SYSTEMS WILL BE USED TO RESTRAIN PIPE, OR WITH PRIOR APPROVAL BY AQUA FOR THE FOLLOWING SITUATIONS:
  1. FOR VERTICAL BENDS IN LIEU OF DEAD-MAN CONCRETE RESTRAINT
  2. FOR VERTICAL AND HORIZONTAL BENDS INSTALLED IN POOR SOIL CONDITIONS
  3. FOR HYDRANTS OR BENDS WITH SLOPING GROUND BEHIND THE POINT OF THRUST

NOTE: MEG-A-LUGS OR APPROVED EQUAL SHALL BE USED TO RESTRAIN FITTINGS AND VALVES

- THRUST BLOCKS WILL NORMALLY BE USED FOR ALL HORIZONTAL BENDS. THE CONTRACTOR WILL GET WRITTEN PRIOR APPROVAL FROM AQUA TO SUBSTITUTE A RESTRAINT SYSTEM IN LIEU OF THRUST BLOCKING FOR HORIZONTAL BENDS.
- CONTRACTOR WILL SUPPLY ALL FIELD-LOK GASKETS

LINEAR FEET OF MECHANICAL PIPE RESTRAINT REQUIRED (EITHER SIDE OF FITTING)

PIPE DIA. (IN.)	DEAD END	90°	45°	22.5°	11.25°	VERT. UP	VERT. DOWN	TEE BRANCH
4	36	16	8	0	0	4	16	18
6	60	28	13	0	0	10	24	35
8	108	54	18	0	0	18	36	90
12	162	90	36	18	0	36	72	144
16	214	118	49	23	12	12	21	200
24	304	165	68	33	16	16	30	289

CONSTRUCTION CRITERIA:
1. FOR WORKING AND/OR TEST PRESSURES< 150 PSI.
2. TYPE 2 TRENCH WITH MINIMUM OF 4.0 FT. OF COVER
3. POLYWRAPPED PIPE
4. 18 FT. PIPE LENGTHS
5. FITTINGS RESTRAINED WITH MEG-A-LUGS OR APPROVED EQUAL

NOTE: IF FIELD CONDITIONS DO NOT CONFORM TO THE NOTED CONSTRUCTION CRITERIA, THE CONTRACTOR SHALL GET WRITTEN APPROVAL FROM AQUA FOR THE NUMBER OF RESTRAINED JOINTS.

THRUST RESTRAINT WITH FIELD-LOK GASKETS

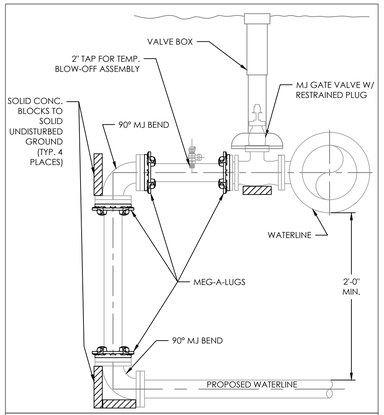

BACKSIDE TAP DETAIL

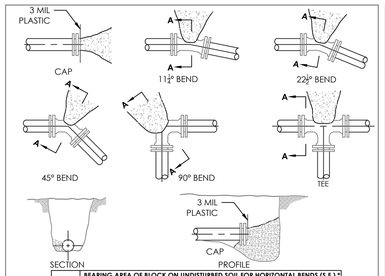

FITTINGS SIZES	BEARING AREA OF BLOCK ON UNDISTURBED SOIL FOR HORIZONTAL BENDS (S.F.) *				
	TEES & ENDS	90° BEND	45° BEND	22 1/2° BEND	11 1/4° BEND
4	1.5	2	1.5	1.5	1.5
6	3	4	2	1.5	1.5
8	4.5	7	3.5	2	1.5
10	7.5	10.5	5	3	1.5
12	10.5	15	7	4	2.5

* AND VERTICAL BENDS UP

NOTES:
1). ALL BLOCKING SHALL BE POURED AGAINST FIRM, UNDISTURBED SOIL.
2). BEARING AREA AT FITTINGS NOT GIVEN IN BEARING TABLE SHALL BE AS DIRECTED BY THE ENGINEER.
3). WHEN POURING AGAINST PLUGS AND BEND FLANGES SET A PIECE OF 3 MIL PLASTIC AGAINST FITTING, TO KEEP CONCRETE OFF BOLTS.
4). LAYOUT TO BE APPROVED BY ENGINEER PRIOR TO CONCRETE POUR.
5). BASED ON 150 PSI STATIC PRESSURE PLUS 50 PSI WATER HAMMER AND 2000 PSF SOIL BEARING.
6). PIPE JOINTS AND BOLTS MUST BE ACCESSIBLE AFTER CONCRETE IS POURED.
7). THRUST BLOCK DETAILS ARE SHOWN AS MINIMUM AND MAY REQUIRE ADDITIONAL BLOCKING.
8). CONCRETE CINDER BLOCKS MAY BE USED IN PLACE OF POURED CONCRETE FOR WATER MAINS 12" AND SMALLER.

CONCRETE THRUST BLOCKING DETAILS

NOTES:
1. SOLID CONCRETE BLOCK TO BE USED UNDER ALL TEES, VALVES, ALSO BEHIND AND UNDER HYDRANT ELBOW.
2. CLEAN CRUSHED STONE FILL AROUND HYDRANT DRAIN TO A DEPTH OF 2'-0".
3. SOLID CONCRETE BLOCK WITH OAK WEDGES, (BRACED AGAINST UNDISTURBED SOIL)
4. THE DISTANCE FROM THE CENTERLINE OF MAIN TO THE CENTERLINE OF HYDRANT WILL BE 5' EXCEPT WHEN INDIVIDUAL CIRCUMSTANCES PROVE IT TO BE INFEASIBLE. WHEN SUCH CIRCUMSTANCES OCCUR, THE LENGTH OF THE LEAD WILL BE NOTED ON THE DRAWINGS WITH THE STATIONING.
5. ALL HYDRANTS SHALL STAND PLUMB AND HAVE PUMPER NOZZLE FACING THE CURB.

ITEM	DESCRIPTION
A	HYDRANT ASSEMBLY PER STANDARDS BY AQUA OHIO INC.
B	6" M.J. GATE VALVE, (3) PIECE VALVE BOX
C	ANCHOR TEE (CLOW F-1217)
D	6" DUCTILE IRON PIPE WITH MEGA-LUGS FOR RETAINERS

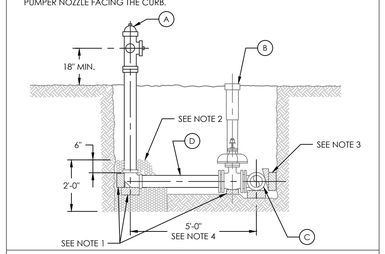

TYPICAL FIRE HYDRANT ASSEMBLY TYPE I

NOTES:
1. SOLID CONCRETE BLOCK TO BE USED UNDER ALL TEES, VALVES, ALSO BEHIND AND UNDER HYDRANT ELBOW.
2. CLEAN CRUSHED STONE FILL AROUND HYDRANT DRAIN TO A DEPTH OF 2'-0".
3. SOLID CONCRETE BLOCK WITH OAK WEDGES, (BRACED AGAINST UNDISTURBED SOIL)
4. ALL HYDRANTS SHALL STAND PLUMB AND HAVE PUMPER NOZZLE FACING THE CURB.

ITEM	DESCRIPTION
A	HYDRANT ASSEMBLY PER STANDARDS BY AQUA OHIO INC.
B	6" M.J. GATE VALVE, (3) PIECE VALVE BOX
C	ANCHOR TEE (CLOW F-1217)
D	M.J. ANCHOR COUPLING x 12"L

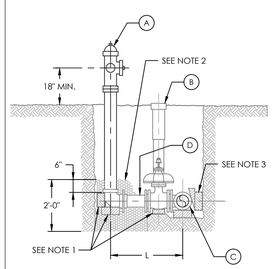

DISTANCE FROM MAIN TO HYDRANT	
MAIN LINE SIZE	L - MIN. DISTANCE (INCHES)
6"	24"
8"	25"
10"	27"
12"	28"
16"	31"
20"	33"
24"	36"

TYPICAL FIRE HYDRANT ASSEMBLY TYPE II

NOTES:
1. SOLID CONCRETE BLOCK TO BE USED UNDER ALL TEES, BENDS, ALSO BEHIND AND UNDER HYDRANT ELBOW.
2. CLEAN CRUSHED STONE FILL AROUND HYDRANT DRAIN TO A DEPTH OF 2'-0".
3. SOLID CONCRETE BLOCK WITH OAK WEDGES, (BRACED AGAINST UNDISTURBED SOIL)
4. THE DISTANCE FROM THE CENTERLINE OF MAIN TO THE CENTERLINE OF HYDRANT WILL BE 5' EXCEPT WHEN INDIVIDUAL CIRCUMSTANCES PROVE IT TO BE INFEASIBLE. WHEN SUCH CIRCUMSTANCES OCCUR, THE LENGTH OF THE LEAD WILL BE NOTED ON THE DRAWINGS WITH THE STATIONING.
5. ALL HYDRANTS SHALL STAND PLUMB AND HAVE PUMPER NOZZLE FACING THE CURB.

ITEM	DESCRIPTION
A	HYDRANT ASSEMBLY PER STANDARDS BY AQUA OHIO, INC.
B	8" M.J. GATE VALVE, (3) PIECE VALVE BOX
C	STANDARD M.J. TEE
D	MJ ANCHOR COUPLING (F-1211)
E	MJ ANCHOR ELBOW (F-1218)

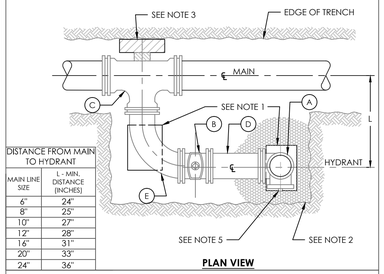

DISTANCE FROM MAIN TO HYDRANT	
MAIN LINE SIZE	L - MIN. DISTANCE (INCHES)
6"	24"
8"	25"
10"	27"
12"	28"
16"	31"
20"	33"
24"	36"

TYPICAL FIRE HYDRANT ASSEMBLY TYPE III

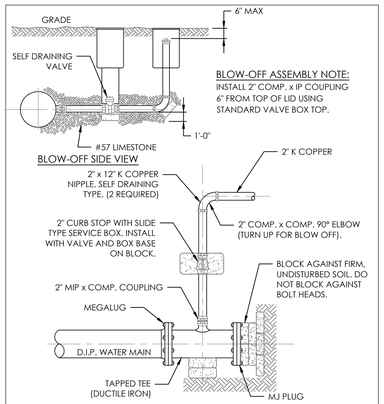

BLOW-OFF ASSEMBLY NOTE:
INSTALL 2" COMP. x IP COUPLING 6" FROM TOP OF LID USING STANDARD VALVE BOX TOP.

2" ADAPTOR & BLOW OFF ASSEMBLY

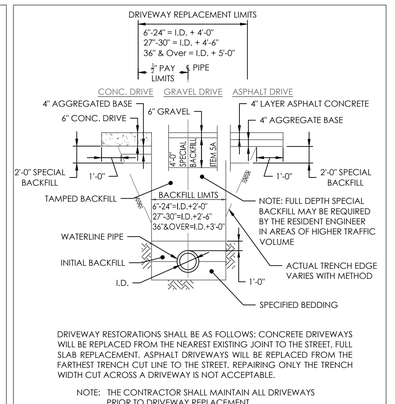

DRIVEWAY RESTORATIONS SHALL BE AS FOLLOWS: CONCRETE DRIVEWAYS WILL BE REPLACED FROM THE NEAREST EXISTING JOINT TO THE STREET, FULL SLAB REPLACEMENT. ASPHALT DRIVEWAYS WILL BE REPLACED FROM THE FARTHEST TRENCH CUT LINE TO THE STREET, REPAIRING ONLY THE TRENCH WIDTH CUT ACROSS A DRIVEWAY IS NOT ACCEPTABLE.

NOTE: THE CONTRACTOR SHALL MAINTAIN ALL DRIVEWAYS PRIOR TO DRIVEWAY REPLACEMENT.

DRIVEWAY ~ PRIVATE DRIVE RESTORATION

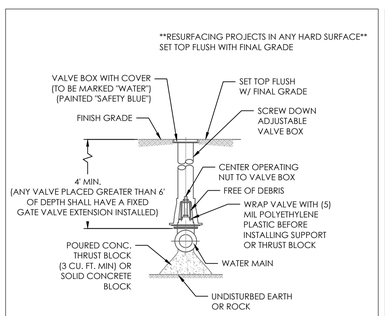

GATE VALVE INSTALLATION DETAIL

1. ALL VALVE BOXES MUST BE KEPT FREE OF DEBRIS DURING CONSTRUCTION.

GATE VALVE INSTALLATION DETAIL

~PIPE CROSSING DATA SHEET~

PIPE DATA	CARRIER PIPE	CASING PIPE
CONTENTS TO BE HANDLED	WATER	CARRIER PIPE
NORMAL OPERATING PRESSURE	60 PSI	N/A
NOMINAL SIZE OF PIPE	12 INCHES	20 INCHES
OUTSIDE DIAMETER	13.20 INCHES	20 INCHES
INSIDE DIAMETER	12.46 INCHES	19.25 INCHES
WALL THICKNESS	.37 INCHES	.375 INCHES
WEIGHT PER FOOT	47.5 LBS.	78.6 LBS.
MATERIAL	DUCTILE IRON	STEEL
PROCESS OF MANUFACTURE	SPIN CAST	ELECTRIC WELD
SPECIFICATION	ANSI.A21.51	ASTM A53
GRADE OF CLASS	CLASS 52	GRADE B
TEST PRESSURE	350 PSI	35,000 PSI, YIELD
TYPE OF JOINT	PUSH ON FIELD LOK RUBBER GASKET	WELDED
TYPE OF COATING	ASPHALTIC PRIMER	NONE
CATHODIC PROTECTION	NONE	NONE
SEAL AT END OF CASING	N/A	BRICK AND MORTAR
METHOD OF INSTALLATION	PUSH ON SKIDS	JACK AND BORE

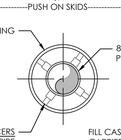

SMITH-BLAIR CASING SPACERS @ 1/3 POINTS EACH PIPE LENGTH (2 PER LENGTH) (NOTE: AS AN ALTERNATIVE, P.S.I. OR CASCADE CASING SPACERS MAY BE USED)

FILL CASING PIPE WITH SAND AFTER CARRIER PIPE IS IN PLACE. ENDS TO BE CLOSED OFF SUFFICIENTLY TO RETAIN THE SAND.

FIELD-LOK GASKETS TO BE USED AT ALL PIPE JOINTS WITHIN CASING PIPE.

CARRIER PIPE DETAIL

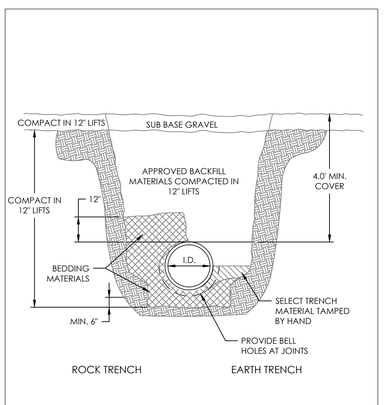

TYPICAL TRENCH DETAIL OUTSIDE OF PAVEMENT

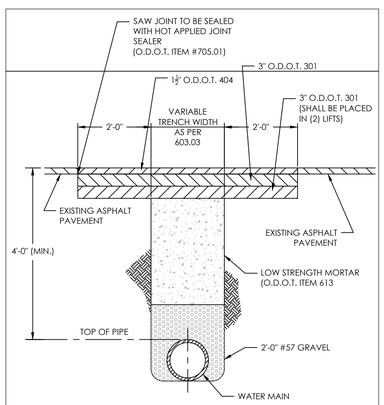

FLEXIBLE PAVEMENT REPLACEMENT DETAIL

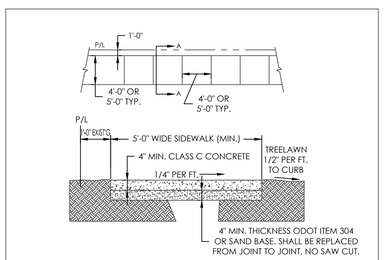

1. EXPANSION JOINTS OF APPROVED PREFORMED ASPHALT FIBRE, 1/4" THICK SHALL BE PROVIDED AT INTERVALS OF NOT MORE THAN TWENTY-FIVE FEET AND AS DEEMED NECESSARY, SUCH AS AT MANHOLES OR UTILITY POLES BETWEEN THE SIDEWALK AND ADJOINING STRUCTURES.
2. MINIMUM FALL FROM TOP OF SIDEWALK TO TOP OF CURB IS 6".
3. SIDEWALK THICKNESS SHALL BE 6" MINIMUM AT DRIVE APPROACHES.
4. CONCRETE SHALL BE 4000 PSI @ 28 DAYS CONFORMING TO ODOT SPECIFICATION #499.

TYPICAL SIDEWALK DETAIL

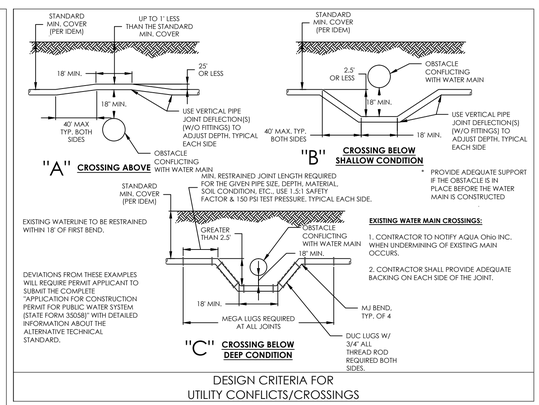

EXISTING WATER MAIN CROSSINGS:

1. CONTRACTOR TO NOTIFY AQUA Ohio INC. WHEN UNDERMINING OF EXISTING MAIN OCCURS.
2. CONTRACTOR SHALL PROVIDE ADEQUATE BACKING ON EACH SIDE OF THE JOINT.

DEVIATIONS FROM THESE EXAMPLES WILL REQUIRE PERMIT APPLICANT TO SUBMIT THE COMPLETE "APPLICATION FOR CONSTRUCTION PERMIT FOR PUBLIC WATER SYSTEM (STATE FORM 35058)" WITH DETAILED INFORMATION ABOUT THE ALTERNATIVE TECHNICAL STANDARD.

DESIGN CRITERIA FOR UTILITY CONFLICTS/CROSSINGS

DESIGNED:	J. ZEIGLER	DATE:	AUGUST, 2015
DRAWN:	J. ZEIGLER	DATE:	AUGUST, 2015

N.T.S.

AQUA

PREPARED BY:
SERVICE CENTER - ENGINEERING DEPT.
6650 SOUTH AVE., BOARDMAN OHIO 44512

TYPICAL WATER LINE DETAILS
AQUA OHIO, INC.

Erosion and Sedimentation Control Notes

1. A copy of the erosion and sedimentation control plan must be available at the site of the earth moving activity during construction and until the site is stabilized.
2. The contractor is responsible for installation and maintenance of all erosion and sediment best management procedures.(BMP's)
3. Plan and execute construction and earthwork methods to control surface drainage from cuts and fills, and from borrow and waste disposal areas to prevent erosion and sedimentation.
4. Erosion and sediment BMP's are required for borrow and waste disposal areas. The contractor is required to have erosion and sedimentation control plans for these areas approved by the regulatory agency.
5. Soil stockpile heights must not exceed 35 feet. Soil stockpile slopes must be 2:1 or flatter.
6. Any disturbed area on which construction activity has ceased must be stabilized immediately. During non-germinating periods, mulch must be applied at the recommended rate of 3 tons/acre. Disturbed areas which are not at finished grade and which will be redisturbed within one year may be stabilized in accordance with temporary seeding specifications. Disturbed areas which are either at finished grade or will not be redisturbed within one year must be stabilized in accordance with permanent seeding specifications.

Staging of Construction Activities

Project construction is anticipated to begin and be completed the same year.

Erosion and sediment BMP's must be constructed, stabilized and functional before site disturbance begins within tributary areas of those BMP's.

1. Rough grading of site to subgrade elevations as required. Stockpiled excavated material is to be contained by filter fence.
2. Construction facility.
3. Utility line construction – Strip and clear topsoil and vegetation from area of construction. Stripping and clearing operations may advance no more than 48 hours ahead of construction. Trenches to be excavated to the subgrade elevation as required and shown on the drawings. Excavated material to be placed on upslope side of trench until opening is backfilled. Daily trench excavation is to be limited to the length of pipe placement and backfilling that can be completed in the same day. At the end of the construction day, the last exposed bell shall have a temporary wooden plug placed in its end and then bell and plug shall be wrapped with visqueen, a 4" x 4" post placed at its end and the trench backfilled.
4. Installation of new water transmission mains and backfilling. Excess excavated material is to be hauled away immediately. Placement of straw bale or filter fabric fences in accordance with BMP's.
5. Installation of paving.
6. Final placement of topsoil, seeding and mulching of all construction disturbed areas that are not paved.
7. After final site stabilization has been achieved, temporary erosion and sediment BMP's must be removed. Areas disturbed during the removal of controls must be stabilized immediately.

Temporary Erosion and Sedimentation Control Measures

1. Filter fabric fence, rock construction entrance and straw bale barriers are to be located and constructed as shown on the drawings according to BMP's.
2. Soil stockpile areas are to be contained by filter fabric fence.
3. Where possible, natural features are to be preserved. Cut and fill operations shall be kept to a minimum and shall conform to existing topography so as to minimize erosion.
4. All unpaved areas disturbed during construction are to be protected by mulching and temporary seeding. Areas disturbed for utility line installation are to be protected by mulching and temporary seeding within 7 days of utility installation.
5. All slopes, channels, ditches or any other disturbed areas shall be stabilized within 72 hours after final earth moving has been completed or where activity ceases for more than 5 days. Interim stabilization measures shall be implemented properly.
6. Any sediment-laden water requiring pumping shall be discharged to a pumped water filter bag prior to discharge.

Permanent Control Measures and Facilities

All areas disturbed during construction and not paved are to be topsoiled, seeded, fertilized, and mulched according to the seeding and fertilizing section of this plan.

Vegetated areas are to be considered permanently stabilized when a uniform 70% vegetative cover of erosion resistant perennial species has been achieved or the disturbed area is covered with an acceptable BMP which permanently minimizes accelerated erosion and sedimentation.

Laydown and Equipment Storage Areas

The contractor will be required to provide adequate erosion and sedimentation control for these areas.

Storage and Disposal Areas for Excess Excavated Material

Areas used for storage and disposal of excess excavated material are to be determined by the contractor. The contractor will be required to provide adequate control measures and facilities for these areas. If required, the contractor will notify regulatory agency.

Maintenance of the Erosion and Sedimentation Controls

1. Until the disturbed construction site is stabilized, all erosion and sediment BMP's must be maintained properly. Maintenance must include inspections following rainfall events and on a weekly basis. All preventative and remedial maintenance work, including clean out, repair, replacement, regrading, reseeding, remulching and renetting must be performed immediately. If erosion and sediment BMP's fail to perform as expected, replacement or modification of those BMP's installed will be required.
2. Other control measures indicated in the Erosion and Sedimentation Control Notes.

Recycling

Where feasible, waste materials are to be recycled.

Seeding and Fertilizing

1. Temporary Seeding

   Temporary seed is to be annual grass rye with 98% purity, 90% germination and 0.15% maximum weed seed. Seeding rate is to be 1.0 lbs. per 100 square yards. Seeding dates March 15 to October 15.

2. Permanent Seeding

   Lawn Areas

   Perennial ryegrass mixture 20% by weight, 98% purity, 90% germination, 0.15% maximum weed seed. Creeping red fescue or chewings fescue 30% by weight, 98% purity, 85% germination, 0.15% maximum weed seed. Kentucky bluegrass mixture 50% by weight, 98% purity, 80% germination, 0.20% maximum weed seed. Seeding rate to be 2.1 pounds per 100 square yards or watch existing conditions. Seeding dates March 15 to June 1 and August 1 to October 15.

   On Slopes

   Tall Fescue 70% by weight, 98% purity, 85% germination and 0.15% maximum weed seed. Birdsfoot Trefoil Mixture 20% by weight, 98% purity, 80% germination and 0.10% maximum weed seed. Redtop 10% by weight, 92% purity, 80% germination and 0.15% maximum weed seed. Seeding rate is to be 1.05 lbs per 100 square yards or watch existing conditions. Seeding dates April 1 to June 15 and August 16 to September 15.

   After seeding, fertilizer and mulch have been applied, all slopes shall have erosion control mat installed.

3. Fertilizing and Liming

   Fertilizer to be 10-20-20 analysis commercial fertilizer Permanent seeding fertilizer rate to be 780 lbs/acre; agricultural limestone rate to be 3 ton/acre. Temporary seeding fertilizer to be 10-20-20 analysis commercial fertilizer; fertilizer rate to be 150 lbs/acre; agricultural limestone rate to be 1 ton/acre.

4. Mulching

   Mulch rate for hay and straw to be 3 tons/acre; rate for hydraulically applied wood cellulose to be 320 pounds/1,000 square yards. Use only straw or wood cellulose mulch after permanent seeding. Binder rates to be 31 gallons/1,000 square yards for emulsified asphalt and 160 pounds/1,000 square yards for wood cellulose.

   Mulching without seeding is to be used as an interim stabilization control during non-growing seasons of the year.

5. Topsoil

   A minimum of 4 inches of topsoil shall be placed on all disturbed areas prior to seeding.

STANDARD FILTER FABRIC FENCE (18" HIGH) DETAIL

NO SCALE

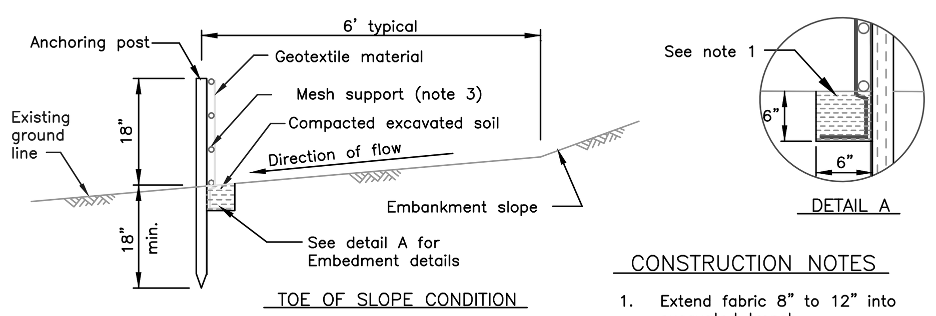

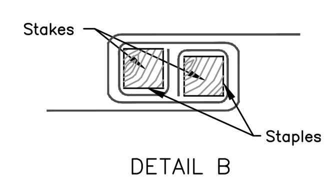

CONSTRUCTION NOTES

1. Extend fabric 8" to 12" into excavated trench.
2. Stakes placed at 8' maximum, 5' maximum C. to C. when mesh support is not provided.
3. Installation of a mesh support will depend on post spacing.
4. When two sections of filter cloth adjoin each other, they shall be overlapped by 6" and folded.
5. Prefabricated units to be installed per manufacturer's instructions.
6. Filter fabric fence must be installed at level grade. Both ends of each fence section must be extended at least 8' upslope at 45° to the main fence alignment.
7. Sediment must be removed when accumulations reach 1/2 the above ground height of the fence.
8. Any fence section which has been undermined or topped must be immediately replaced with a rock filter outlet.

MATERIAL NOTES

Posts: 2" hardwood or steel, T OR U TYPE

Fence: Woven wire, 14-1/4 gage 6" max. mesh opening

Filter Cloth: Woven Polypropylene fabric

Prefabricated Unit: Woven polypropylene fabric with pre-stapled posts

Maximum Slope Length for Filter Fabric Fence

Slope – Percent	Maximum Slope Length (ft) Above Fence 18" High Fence	Maximum Slope Length (ft) Above Fence 30" High Fence*
2 (or less)	150	500
5	100	250
10	50	150
15	35	100
20	25	70
25	20	55
30	15	45
35	15	40
40	15	35
45	10	30
50	10	25

* Reinforced 30" high fence. See Standard Construction Details #20 or #21

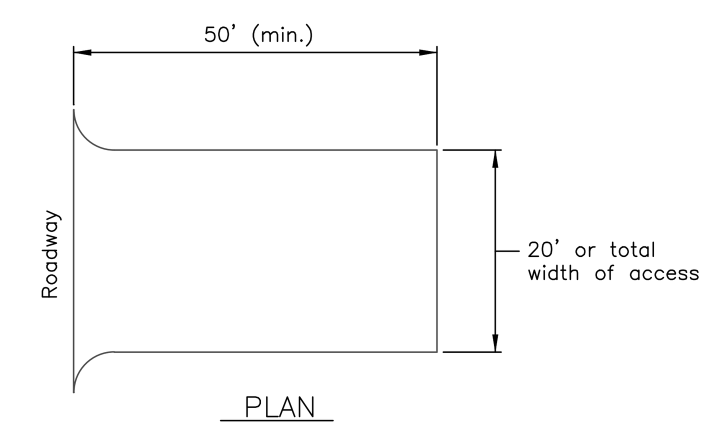

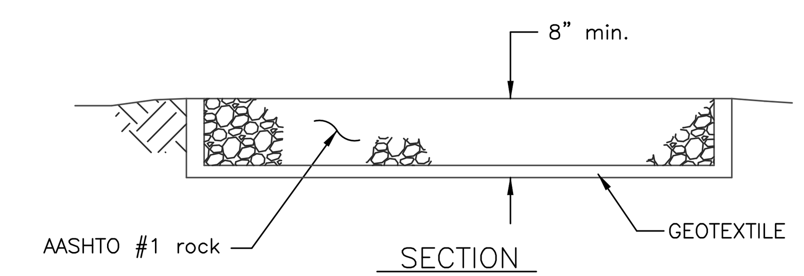

NOTES:

1. Rock size – AASHTO No. 1
2. The structure's thickness will be constantly maintained to the specified dimensions by adding rock. A stockpile of rock material will be maintained on the site for this purpose. At the end of each construction day, all sediment deposited on paved roadways, will be removed and returned to the construction site.
3. Geotextile will be placed over the entire area prior to placing of stone.
4. Washing of the roadway or sweeping the deposit into roadway ditches, sewers culverts or other drainage ways is not acceptable.
5. All surface water flowing or diverted toward construction entrances shall be piped across the entrance. If piping is impractical, a mountable berm with 5:1 slopes will be permitted.
6. Wheels shall be cleaned to remove sediment prior to entrance onto paved roadways. When washing is required, it shall be done on an area stabilized with stone and which drains into an approved sediment trapping device.
7. Periodic inspection and needed maintenance shall be provided after each rain.

ROCK CONSTRUCTION ENTRANCE DETAIL

NO SCALE

DITCH RESTORATION

1. ALL DEFINABLE DITCHES SHALL BE RESTORED PER APPLICABLE COUNTY SPECIFICATIONS AND SHALL CONFORM TO THE CONFIGURATION AS SHOWN ON THE PAVEMENT RESTORATION DETAIL.
2. DITCHES SHALL BE STABILIZED WITH 48 IN. WIDE JUTE MATTING WEIGHING AN AVERAGE OF 1.2 LB/YD OR EQUAL AND SHALL BE INSTALLED AND SEEDED ACCORDING TO THE MANUFACTURER'S RECOMMENDATIONS.
3. THE MATTING INSTALLATION SHALL RESEMBLE THE DETAIL BELOW.

Specifications for MATTING

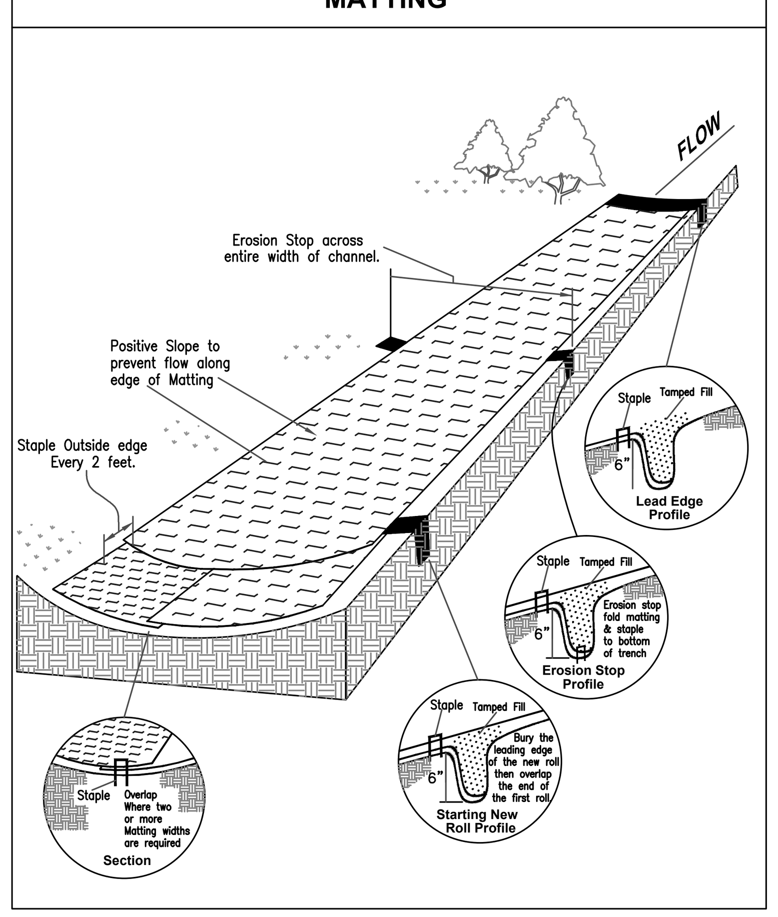

CURB INLETS

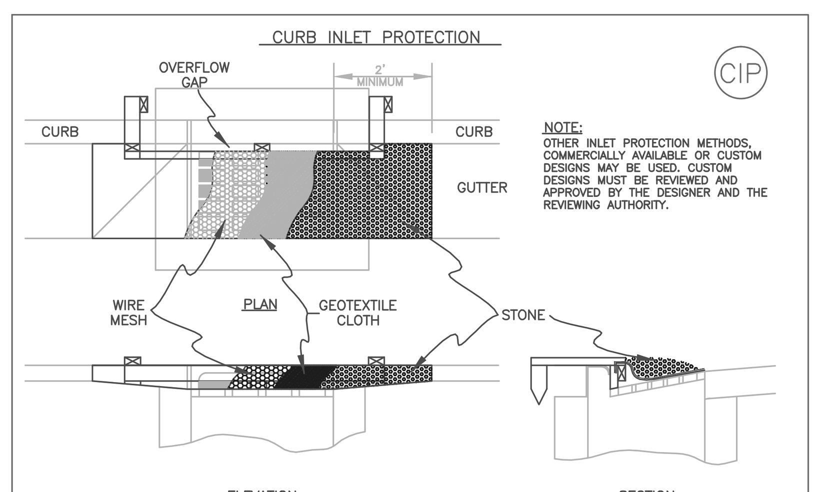

FOR ADDITIONAL DETAILS SEE RAINWATER AND LAND DEVELOPMENT

SPECIFICATIONS

1. INLET PROTECTION MUST BE INSTALLED AT EACH CURB INLET PROVIDING ACCESS TO A STORM DRAIN THAT DOES NOT OUTLET INTO A SEDIMENT TRAP OR SEDIMENT BASIN.
2. INLET PROTECTION MUST BE INSTALLED AT THE FIRST INLET DOWNSTREAM OF SEDIMENT OBSERVED IN THE GUTTER SECTION.
3. INLET PROTECTION SHALL BE CONSTRUCTED EITHER BEFORE UPSLOPE LAND DISTURBANCE BEGINS OR BEFORE THE STORM DRAIN BECOMES OPERATIONAL.
4. THE WOODEN FRAME IS TO BE CONSTRUCTED OF 2" X 4" CONSTRUCTION-GRADE LUMBER. THE END SPACERS SHALL BE A MINIMUM OF 1' BEYOND BOTH ENDS OF THE THROAT OPENING. THE ANCHORS SHALL BE NAILED TO 2x4 STAKES DRIVEN ON THE OPPOSITE SIDE OF THE CURB.
5. THE WIRE MESH SHALL BE OF SUFFICIENT STRENGTH TO SUPPORT FABRIN AND STONE. IT SHALL BE A CONTINUOUS PIECE WITH A MINIMUM WIDTH OF 30" AND 4' LONGER THAN THE THROAT LENGTH OF THE INLET, 2' ON EACH SIDE.
6. GEOTEXTILE CLOTH SHALL HAVE AN EQUIVALENT OPENING SIZE (EOS) OF 20-40 SIEVE AND BE RESISTANT TO SUNLIGHT. IT SHALL BE AT LEAST THE SAME SIZE AS THE WIRE MESH.
7. THE WIRE MESH AND GEOTEXTILE CLOTH SHALL BE FORMED TO THE CONCRETE GUTTER AND AGAINST THE FACE OF THE CURB ON BOTH SIDES OF THE INLET AND SECURELY FASTENED TO THE 2x4 FRAME.
8. TWO-INCH STONE SHALL BE PLACED OVER THE WIRE MESH AND GEOTEXTILE IN SUCH A MANNER AS TO PREVENT WATER FROM ENTERING THE INLET UNDER OR AROUND THE GEOTEXTILE CLOTH.

CATCH BASINS

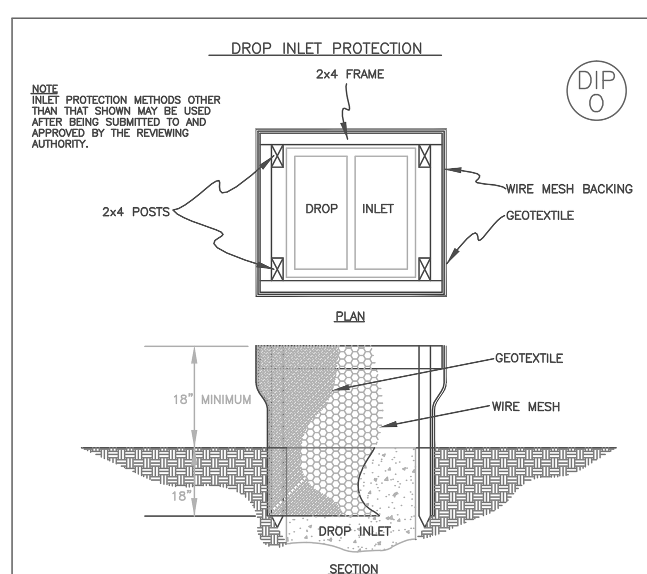

FOR ADDITIONAL DETAILS SEE RAINWATER AND LAND DEVELOPMENT

SPECIFICATIONS

1. INLET PROTECTION SHALL BE CONSTRUCTED EITHER BEFORE UPSLOPE LAND DISTURBANCE BEGINS OR BEFORE THE STORM DRAIN BECOMES OPERATIONAL.
2. THE EARTH AROUND THE INLET SHALL BE EXCAVATED COMPLETELY TO A DEPTH OF AT LEAST 18 INCHES.
3. THE WOODEN FRAME SHALL BE CONSTRUCTED OF 2"x 4" CONSTRUCTION GRADE LUMBER. THE 2x4 POSTS SHALL BE DRIVEN 1' INTO THE GROUND AT THE FOUR CORNERS OF THE INLET AND THE TOP PORTIONS OF 2x4 FRAME ASSEMBLED USING THE OVERLAP JOINT SHOWN. THE TOP OF THE FRAME SHALL BE AT LEAST 6" BELOW ADJACENT ROADS IF PONDED WATER WOULD POSE A SAFETY HAZARD TO TRAFFIC.
4. WIRE MESH SHALL BE OF SUFFICIENT STRENGTH TO SUPPORT FABRIC WITH WATER FULLY IMPOUNDED AGAINST IT. IT SHALL BE STRETCHED TIGHTLY AROUND THE FRAME AND FASTENED SECURELY TO THE FRAME.
5. GEOTEXTILE SHALL HAVE AN EQUIVALENT OPENING SIZE OF 20-40 SIEVE AND BE RESISTANT TO SUNLIGHT. IT SHALL BE STRETCHED TIGHTLY AROUND THE FRAME AND FASTENED SECURELY TO IT. IT SHALL EXTEND FROM THE TOP OF THE FRAME TO 18" BELOW THE INLET NOTCH ELEVATION. THE GEOTEXTILE SHALL OVERLAP ACROSS ONE SIDE OF THE INLET SO THE ENDS OF THE CLOTH ARE NOT FASTENED TO THE SAME POST.
6. BACKFILL SHALL BE PLACED AROUND THE INLET IN COMPACTED 6" LAYERS UNTIL THE EARTH IS EVEN WITH THE NOTCH ELEVATION ON ENDS AND TOP ELEVATION ON SIDES.
7. A COMPACTED EARTH DIKE OR A CHECK DAM SHALL BE CONSTRUCTED IN THE DITCH LINE BELOW THE INLET IF THE INLET IS NOT IN A DEPRESSION AND IF RUNOFF BYPASSING THE INLET WILL NOT FLOW TO A SETTLING POND. THE TOP OF THE EARTH DIKE SHALL BE AT LEAST 6' HIGHER THAN THE TOP OF THE FRAME.

STREAM UTILITY CROSSINGS

1. WHEN CROSSING A STREAM THE CONTRACTOR SHALL, TEMPORARILY ROUTE THE STREAM FLOW AROUND THE WORK AREA BY BRIDGING THE TRENCH WITH A RIGID CULVERT, PUMPING, OR CONSTRUCTING A TEMPORARY CHANNEL. TEMPORARY CHANNELS SHALL BE STABILIZED BY ROCK OR A GEOTEXTILE LINING THE CHANNEL BOTTOM AND SIDE SLOPES.
2. THE LIMITS OF DISTURBANCE SHALL BE AS NARROW AS POSSIBLE INCLUDING NOT ONLY THE CONSTRUCTION OPERATIONS ITSELF BUT ALSO THE CLEARING DONE THROUGH THE VEGETATION GROWING ON THE STREAMBANKS.
3. THE TIME BETWEEN INITIAL DISTURBANCE OF THE STREAM AND FINAL STABILIZATION SHALL BE KEPT TO A MINIMUM. CONSTRUCTION SHALL NOT BEGIN UNTIL THE WATER LINE IS IN PLACE WITHIN 10 FT. OF THE STREAMBANK.
4. THE STREAM CROSSING SHALL GENERALLY RESEMBLE THE DETAIL BELOW.
5. STREAM NAME:_______________________________

   AND CLASSIFICATION _______________________________

Specifications for SMALL STREAM UTILITY CROSSING

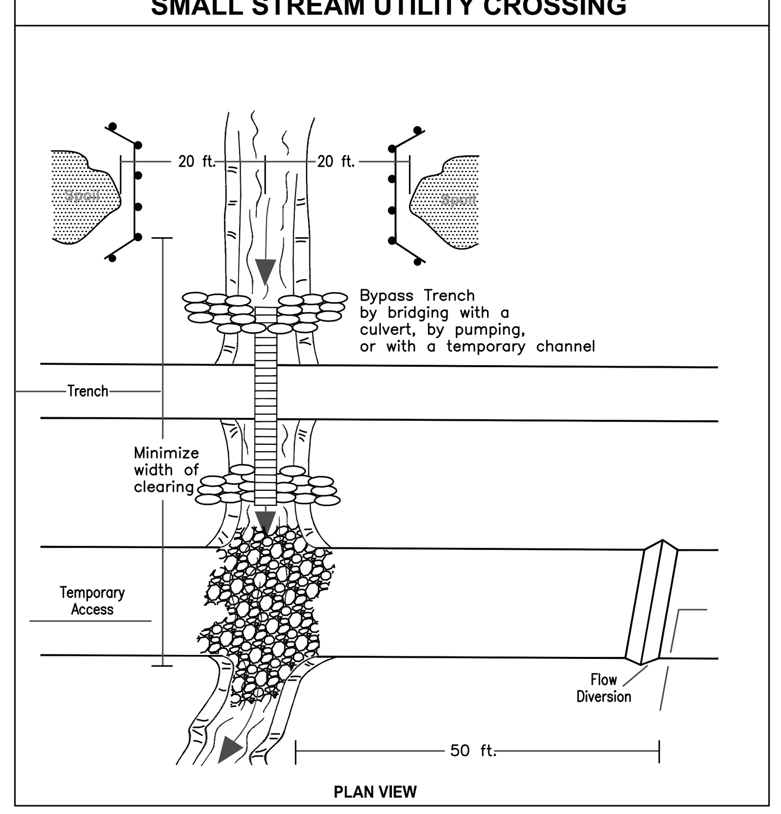

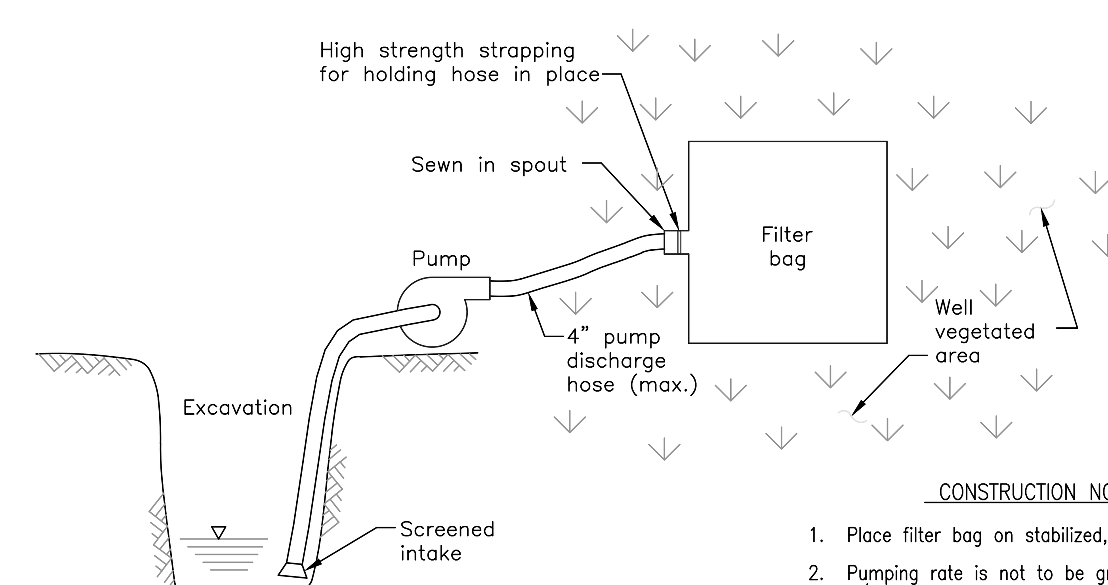

PUMPED WATER FILTER BAG SPECIFICATIONS

Geotextile fabric properties	Test method	Units
Type-non woven		
Weight	ASTM D-3776	8 oz/yd
Grab tensile	ASTM D-4632	203 lb.
Puncture	ASTM D-4833	130 lb.
Flow rate	ASTM D-4491	80 gal/min/ft
Permittivity	ASTM D-4491	1.5 sec^{-1}
UV resistant	ASTM D-4355	70 %
AOS % retained	ASTM D-4751	100 %

Model – Dirtbag 53 as marketed by ACF Environmental (1-800-448-3636) or other filter bag that meets specifications.

CONSTRUCTION NOTES

1. Place filter bag on stabilized, well vegetated area.
2. Pumping rate is not to be greater than 750 gpm or 1/2 the maximum specified by the manufacturer, which ever is less.
3. Strap pump discharge hose firmly to filter bag in the manner specified by the manufacturer.
4. Monitor and evaluate pumping operation to assure filter bag continues to function properly.
5. Replace filter bag when bag becomes 1/2 full or when directed by engineer or conservation district.
6. Dispose of sediment in a manner satisfactory to the engineer and/or conservation district.
7. Discharge from filter bag shall be to stable, erosion resistant areas. Where this is not possible, a geotextile flow path shall be provided. Bags shall not be placed on slopes greater than 5%.
8. Extra filter bags must be maintained on site at all times.
9. Filter bags are to be made from non-woven geotextile material sewn with high strength, double stitched "J" type seams. They are to be capable of trapping particles larger than 150 microns.
10. Provide suitable means of accessing bag with machinery required for disposal purposes.
11. Pump intake to be floating and screened.
12. Filter bags to be inspected daily. If any problem is detected, pumping shall cease immediately and not resume until the problem is corrected.

PUMPED WATER FILTER BAG DETAIL

NO SCALE

no.	date	revisions	by

Registered Professional Engineer

Date________________

designed L. LaCivita	date October, 2002	Plot Scale: 1= 1	AQUA	PREPARED BY: SERVICE CENTER-ENGINEERING DEPT. 6650 SOUTH AVE. BOARDMAN OHIO 44512	division
drawn L. LaCivita	date October, 2002	Dwg. Not to Scale			file no.
background Kucera	date	.dwg			drawing no. 6

STANDARD SOIL EROSION & SEDIMENT CONTROL NOTES AND DETAILS

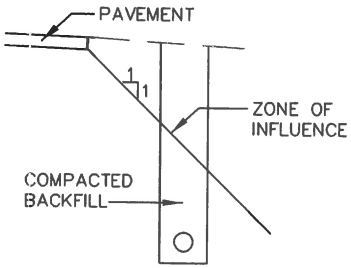

PARALLEL
ZONE OF INFLUENCE

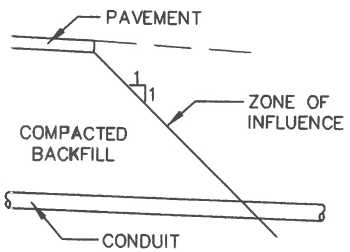

TRANSVERSE
ZONE OF INFLUENCE

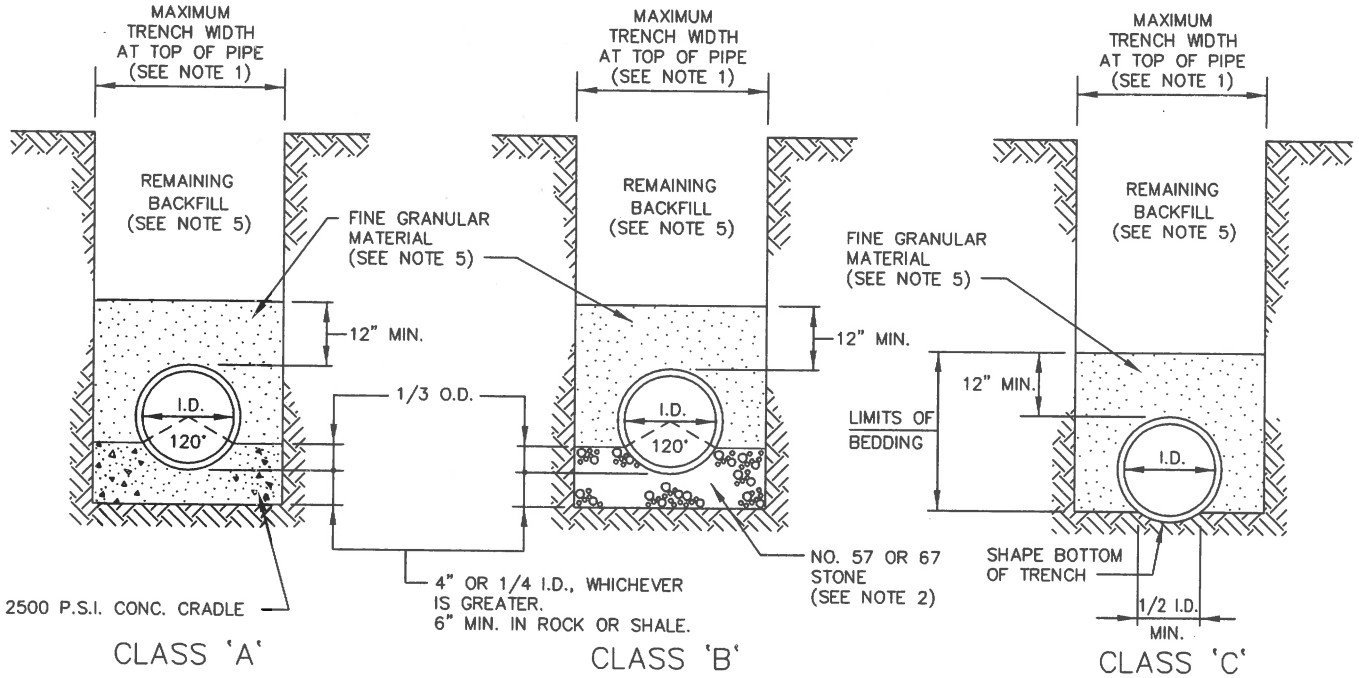

NOTES:

1. MAXIMUM TRENCH WIDTH AT TOP OF PIPE SHALL BE O.D.+ 24" FOR ALL PIPES UP TO AND INCLUDING 24" I.D.; O.D.+ 30" FOR PIPE LARGER THAN 24" I.D. TO 54" I.D. AND O.D.+ 48" FOR PIPE SIZES 60" AND OVER.
2. PIPE BEDDING SHALL BE NO. 57 OR NO. 67 STONE.
3. ALL BEDDING SHALL BE CLASS 'B' UNLESS OTHERWISE NOTED ON THE PLANS OR AUTHORIZED BY THE ENGINEER. CLASS 'A' BEDDING SHALL BE USED FOR ALL PIPE UNDER PAVED AREAS WITH LESS THAN 18" COVER TO PAVEMENT SUBGRADE.
4. WATERLINE BEDDING SHALL BE CLASS 'C'.
5. a) PIPE BACKFILL UNDER EXISTING OR PROPOSED PAVEMENT, STRUCTURES OR WITHIN A 1:1 ZONE OF INFLUENCE PARALLEL OR TRANSVERSE TO PAVEMENT AND STRUCTURES SHALL BE NO. 57 OR NO. 67 STONE OR ITEM 613 LOW STRENGTH MORTAR BACKFILL TO 12" ABOVE TOP OF PIPE. REMAINING TRENCH BACKFILL UNDER EXISTING OR PROPOSED PAVEMENT AND STRUCTURES OR WITHIN A 1:1 ZONE OF INFLUENCE PARALLEL OR TRANSVERSE TO EXISTING OR PROPOSED PAVEMENT AND STRUCTURES SHALL BE O.D.O.T. ITEM 613 LOW STRENGTH MORTAR BACKFILL TO 1 FOOT ABOVE THE INTERSECTION OF THE 1:1 ZONE OF INFLUENCE LINE WITH THE EDGE OF THE TRENCH.

   b) IN AREAS OUTSIDE PAVEMENT, STRUCTURES OR THE 1:1 ZONE OF INFLUENCE, SELECT FRIABLE ON-SITE MATERIAL APPROVED BY THE ENGINEER MAY BE USED FOR R.C.P. AND D.I.P.; NO. 57 OR NO. 67 STONE SHALL BE USED FOR V.C.P. AND THERMOPLASTIC PIPE TO 12" ABOVE TOP OF PIPE. FOR REMAINDER OF TRENCH BACKFILL, SELECT FRIABLE ON-SITE MATERIAL APPROVED BY THE ENGINEER MAY BE USED.
6. SLAG SHALL NOT BE USED FOR BEDDING OR BACKFILL.
7. CLAY DAMS SHALL BE REQUIRED WHEN AND WHERE NECESSARY PER PLAN OR AS DIRECTED BY THE ENGINEER.
8. ALL UTILITY CROSSINGS UNDER THE PROPOSED STORM SEWER SHALL BE PROPERLY BACKFILLED PER CITY STANDARDS.

TRENCH & BEDDING DETAILS, 2009
(CITY OF MENTOR)

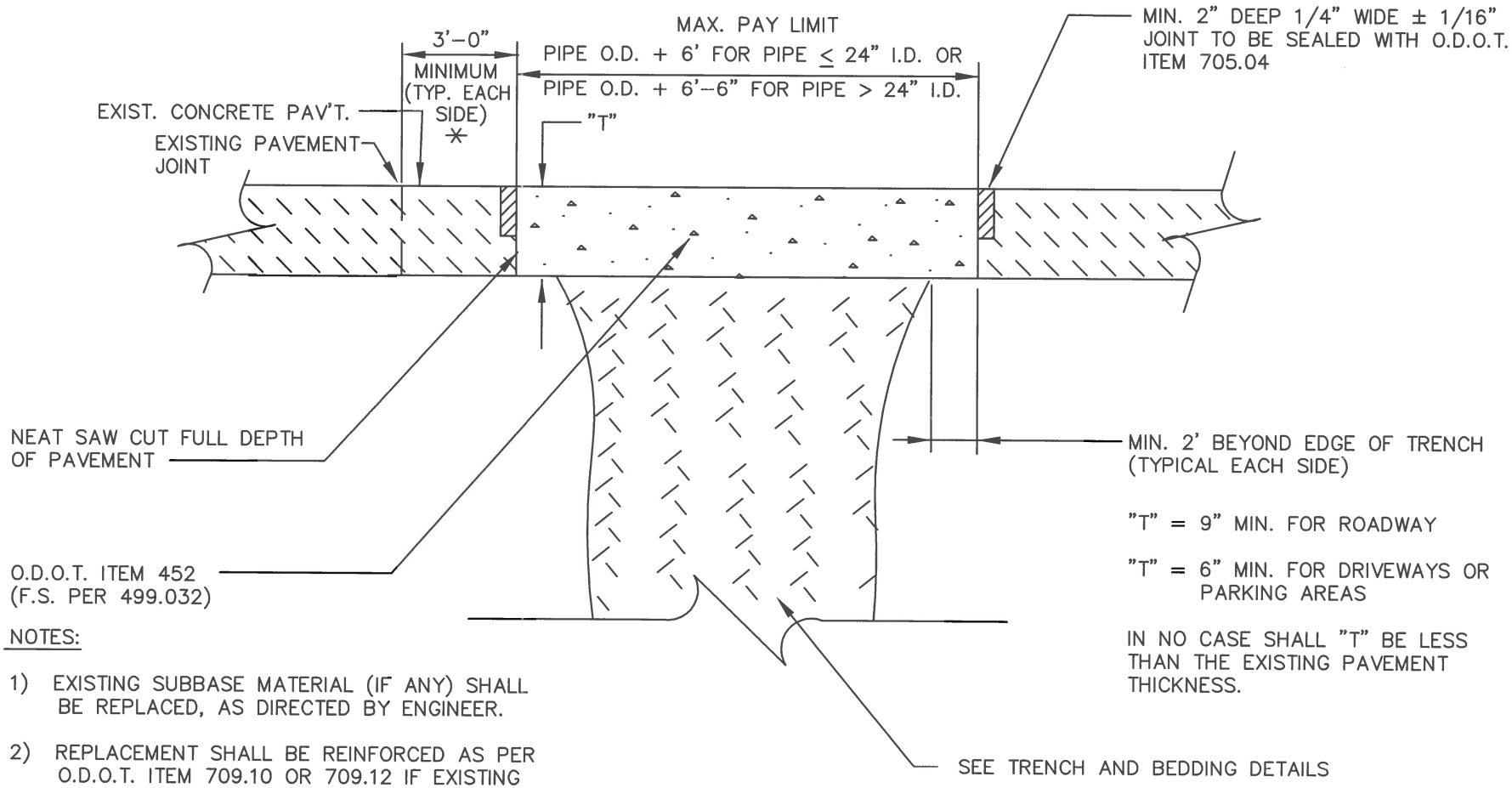

NOTES:

1) EXISTING SUBBASE MATERIAL (IF ANY) SHALL BE REPLACED, AS DIRECTED BY ENGINEER.

2) REPLACEMENT SHALL BE REINFORCED AS PER O.D.O.T. ITEM 709.10 OR 709.12 IF EXISTING PAVEMENT IS REINFORCED.

3) 5/8"ø HOOKBOLT @ 30" O.C. MAY BE REQUIRED AS DIRECTED BY THE ENGINEER.

* WHERE WIDTH IS LESS THAN 3'-0" OR EXISTING PAVEMENT IS DETERIORATED, THE CONTRACTOR SHALL REPLACE ADDITIONAL PAVEMENT AS DIRECTED BY THE ENGINEER.

TYPE A PAVEMENT REPLACEMENT